SAFETY NOTICE

This manual has been prepared as a guide to correctly service and repair all vehicles of the Can-Am™ Maverick™ X3 Series.

This edition was primarily published to be used by mechanical technicians who are already familiar with all service procedures relating to BRP products. Mechanical technicians should attend training courses given by BRPTI.

Please note that the instructions in this manual will apply only if proper hand tools and special service tools are used.

The contents of this manual depicts parts and/or procedures applicable to a particular product at the time of writing. Service and warranty bulletins may be published to update the content of this manual. Dealer modifications that were carried out after manufacturing of the product, whether or not authorized by BRP, are not included.

In addition, the sole purpose of the illustrations throughout the manual, is to assist identification of the general configuration of the parts. They are not to be interpreted as technical drawings or exact replicas of the parts.

The use of BRP parts is most strongly recommended when considering replacement of any component. Dealer and/or distributor assistance should be sought in case of doubt.

The engines and the corresponding components identified in this document should not be utilized on product(s) other than those mentioned in this document.

It is understood that certain modifications may render use of the vehicle illegal under existing federal, provincial and state regulations.

This manual emphasizes particular information which, is denoted by the following wording and symbols:

⚠ WARNING

Indicates a potential hazard that, if not avoided, could result in serious injury or death.

⚠ CAUTION Indicates a hazardous situation which, if not avoided, could result in minor or moderate injury.

NOTICE Indicates an instruction which, if not followed, could result in severe damage to vehicle components or other property.

NOTE: Indicates supplementary information required to fully complete an instruction.

Although the mere reading of such information does not eliminate the hazard, your understanding of the information provided will promote its correct use.

Always observe common shop safety practice.

Unless otherwise noted, the engine must be stopped and the tether cord must be removed prior to perform any services.

Torque wrench tightening specifications must be strictly adhered to. Use the torque values and service products as in the exploded views or in the procedures when noted.

Locking devices when removed must be replaced (e.g.: locking tabs, elastic stop nuts, self-locking fasteners, cotter pins, etc.).

Hoses, cables and locking ties removed during a procedure must be reinstalled as per factory standards.

When ordering parts always refer to the specific model *PARTS CATALOGS*.

We strongly recommend that any services be carried out and/or verified by a highly skilled professional mechanic.

It is understood that this manual may be translated into another language. In the event of any discrepancy, the English version shall prevail.

BRP disclaims liability for all damages and/or injuries resulting from the improper use of the contents of this publication.

INTRODUCTION

The information and component/system descriptions contained in this manual are correct at time of writing. BRP however, maintains a policy of continuous improvement of its products without imposing upon itself any obligation to install them on products previously manufactured.

Due to late changes, there may be some differences between the manufactured product and the description and/or specifications in this document.

BRP reserves the right at any time to discontinue or change specifications, designs, features, models or equipment without incurring obligation.

VEHICLE INFORMATION

VEHICLE IDENTIFICATION NUMBER (VIN)

The VIN (Vehicle Identification Number) decal is located behind the passenger seat on the rear lower bulkhead.

VIN Decal Description



TYPICAL — VEHICLE IDENTIFICATION NUMBER LABEL
1. *VIN (Vehicle Identification Number)*
2. *Model number*
3. *Manufacturing date*

ENGINE IDENTIFICATION NUMBER (EIN)

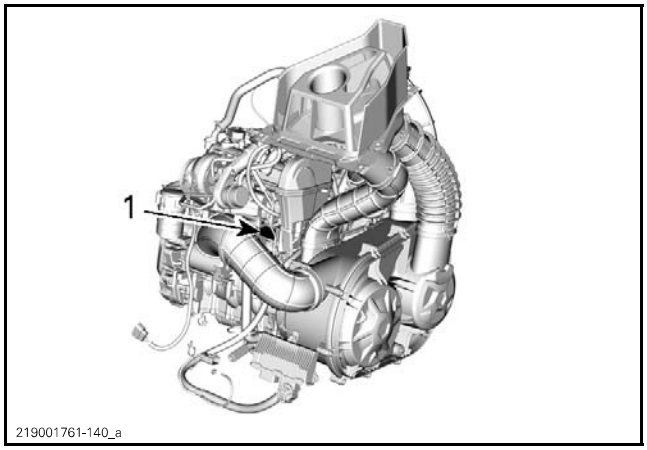

TYPICAL — ENGINE SERIAL NUMBER LABEL
1. *EIN (Engine Identification Number)*

LIFTING AND SUPPORTING THE VEHICLE

Front of Vehicle

Place vehicle on a flat non slippery ground.

Ensure vehicle shift lever is set to PARK.

Install an hydraulic jack under front skid plate.

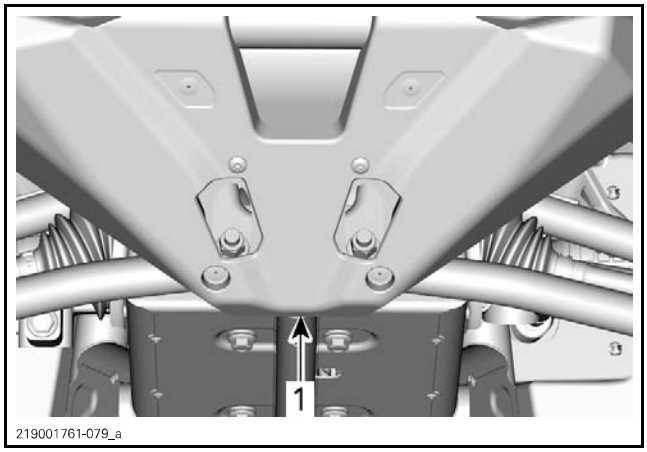

FRONT OF VEHICLE
1. *Hydraulic jack position*

Lift front of vehicle and install a jack stand on each side under frame as shown below:

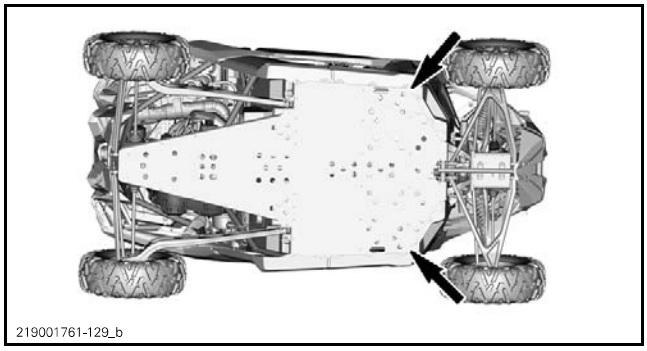

FRONT OF VEHICLE

Lower hydraulic lift and ensure vehicle is supported safely onto both jack stands.

Rear of Vehicle

Place vehicle on a flat non slippery ground.

Activate 4WD mode.

Ensure vehicle shift lever is set to PARK.

Install an hydraulic jack under the vehicle.

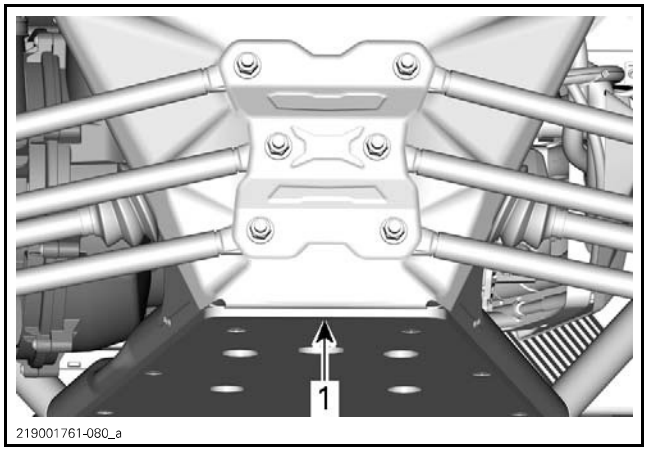

REAR OF VEHICLE
1. Hydraulic jack position

Lift rear of vehicle and install a jack stand on each side under frame as shown below:

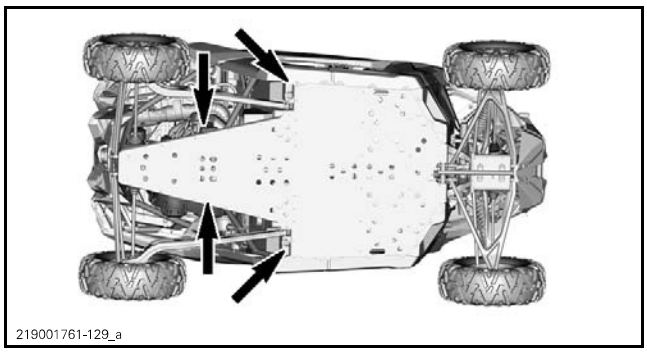

REAR OF VEHICLE

Lower hydraulic lift and ensure vehicle is supported safely onto both jack stands.

LIFTING THE VEHICLE WITH A LIFTING TABLE

Roll vehicle above lifting table.

Install two 4 x 4 horizontally across vehicle as close as possible to lifting points.

NOTICE Ensure 4 x 4 are as close to lifting points as possible.

Lift vehicle using table.

NOTE: If repositioning of vehicle is needed, lift either front or rear of vehicle using the lower portion of applicable bumper.

⚠ WARNING

Do not allow anyone in the vehicle while it is being lifted.

HOISTING THE VEHICLE

The vehicle may be lifted off the ground by the cage using a hoist and lifting straps.

NOTICE Never use the central portion of the cage to lift the vehicle.

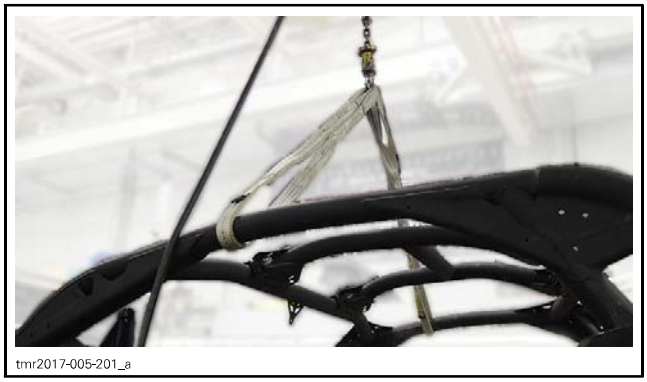

⚠ WARNING

- Ensure hoist and lifting straps are rated for lifting the total vehicle weight. Refer to applicable manufactures instructions.
- Ensure lifting straps are in good condition before lifting vehicle.
- Do not allow anyone in the vehicle or under any portion of the vehicle while it is suspended by a hoist.
- Do not perform any work on the vehicle while it is suspended by a hoist.

TRANSPORTING THE VEHICLE

If your vehicle needs to be transported, it should be carried on a flatbed trailer of the proper size and capacity.

NOTICE Do not tow this vehicle — towing can seriously damage the vehicle's drive system.

When contacting a towing or transporting service, be sure to ask if they have a flatbed trailer, loading ramp or power ramp to safely lift the vehicle and tie-down straps. Ensure the vehicle is properly transported as specified in this section.

NOTICE Avoid using chains to tie the vehicle — they may damage the surface finish or plastic components.

⚠ WARNING

If the vehicle is equipped with a windshield, transport it facing forward to avoid damaging the windshield.

To load the vehicle on a platform for transport, proceed as follow:

1. Shift the vehicle into NEUTRAL (N).
2. Then proceed as follows:
   2.1 Put a strap around the lower arm of each front suspension.

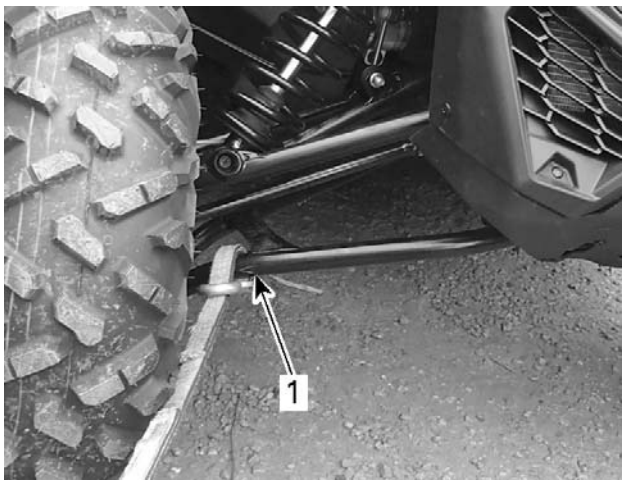

1. Lower arm of each front suspension

   2.2 Attach the straps to the winch cable of the towing vehicle.
   2.3 Pull the vehicle on the flatbed trailer with the winch.
3. Remove the key from the D.E.S.S. post.
4. Strap the front tires by using tire towing straps.
5. Put a strap around the central arm of each rear suspension.

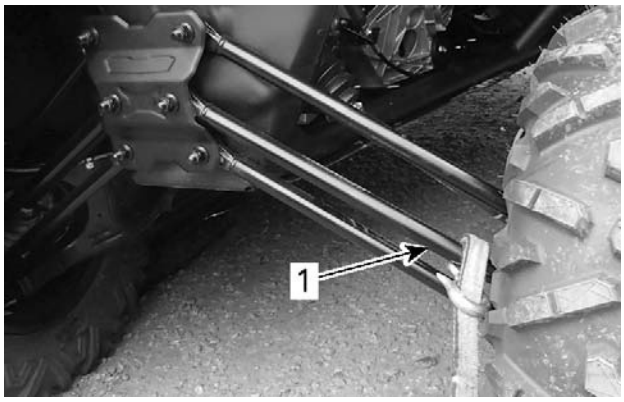

6. Strap the rear tires by using tire towing straps.
7. Firmly attach the rear suspension tie-down straps to both sides of the rear of the trailer with ratchets.
8. Ensure that both the front and rear wheels are firmly attached to the trailer.

⚠ WARNING

Make sure no loose objects are present inside vehicle during vehicle transportation.

ENGINE EMISSIONS INFORMATION

MANUFACTURER'S RESPONSIBILITY

Manufacturers of engines must determine the exhaust emission levels for each engine horsepower family and certify these engines with the United States of America Environmental Protection Agency (EPA). An emissions control information label, showing emission levels and engine specifications, must be placed on each vehicle at the time of manufacture.

DEALER RESPONSIBILITY

When servicing any vehicle that carry an emissions control information label, adjustments must be kept within published factory specifications.

Replacement or repair of any emission related component must be executed in a manner that maintains emission levels within the prescribed certification standards.

Dealers are not to modify the engine in any manner that would alter the horsepower or allow emission levels to exceed their predetermined factory specifications.

Exceptions include manufacturer's prescribed changes.

OWNER RESPONSIBILITY

The owner/operator is required to have engine maintenance performed to maintain emission levels within prescribed certification standards.

The owner/operator is not to, and should not allow anyone else to modify the engine in any manner that would alter the horsepower or allow emissions levels to exceed their predetermined factory specifications.

EMISSION REGULATIONS

The vehicle you are servicing may have been certified to applicable emission regulations in your country or state. Not as an exhaustive list; this may include standards for engine exhaust emissions, crankcase emissions, permeation emissions and evaporative emissions. Servicing procedures in this manual must be strictly followed in order to keep the vehicle within the factory specifications. Failure to follow servicing procedures in this manual may lead a vehicle to be out of compliance with applicable emission regulations.

When servicing any vehicle; adjustments must be kept within published factory specifications. Replacement or repair of any emission related component must be executed in a manner that maintains emission levels within the applicable certification standards. Nobody is allowed to modify the engine in any manner that would alter the horsepower or allow emission levels to exceed their predetermined factory specifications. Exceptions include manufacturer's prescribed changes.

The owner/operator is required to have engine maintenance performed to maintain emission levels within the prescribed certification standards. The owner/operator is allowed and should not allow anyone else to modify the engine in any manner that would alter the horsepower or allow emissions levels to exceed their predetermined factory specifications.

RADIO FREQUENCY DIGITALLY ENCODED SECURITY SYSTEM (RF D.E.S.S. KEY)

This device complies with FCC Part 15 and Industry Canada license exempt RSS standard(s). Operation is subject to the following two conditions: (1) this device may not cause interference, and (2) this device must accept any interference, including interference that may cause undesired operation of the device.

Changes or modifications not expressly approved by the party responsible for compliance could void the user's authority to operate the equipment.

IC Registration Number: 12006A-M01456

FCC ID: 2ACERM01456

We, the party responsible for compliance, declare under our sole responsibility that the device is in conformity with the provisions of the following Council Directive: 2014/53/EU. To which this declaration relates is in conformity with the essential requirements and other relevant requirements. The product is in conformity with the following directives, harmonized standards and regulations: Radio Equipment Directive (RED) 2014/53/EU and Harmonized Standards: EN 300 330-2, EN 60950-1.

NOISE EMISSION CONTROL SYSTEM REGULATION

USA and Canada Only

Tampering with Noise Control System Is Prohibited!

U.S. Federal law and Canadian provincial laws may prohibit the following acts or the causing there of:

1. The removal or rendering inoperative by any person other than for purposes of maintenance, repair or replacement of any device or element of design incorporated into any new vehicle for the purpose of noise control prior to its sale or delivery to the ultimate purchaser or while it is in use or
2. The use of the vehicle after such device or element of design has been removed or rendered inoperative by any person.

Among those Acts Presumed to Constitute Tampering Are the Acts Listed Below:

1. Removal or alteration or the puncturing of the mufflers or any engine component which conducts removal of engine exhaust gases.

2. Removal or alteration or the puncturing of any part of the intake system.
3. Replacing any moving parts of the vehicle or parts of the exhaust or intake system, with parts other than those specified by the manufacturer.
4. Lack of proper maintenance.

MANUAL INFORMATION

MANUAL PROCEDURES

Many of the procedures in this manual are interrelated. Before undertaking any task, you should read and thoroughly understand the entire section or subsection in which the procedure is contained.

⚠ WARNING

Unless otherwise specified, the engine should be turned OFF and cold for all maintenance and repair procedures.

A number of procedures throughout the book require the use of special tools. Before starting any procedure, be sure that you have on hand all required tools, or their approved equivalents.

The use of RIGHT and LEFT indications in the text are always referenced to the driving position (sitting on the vehicle).

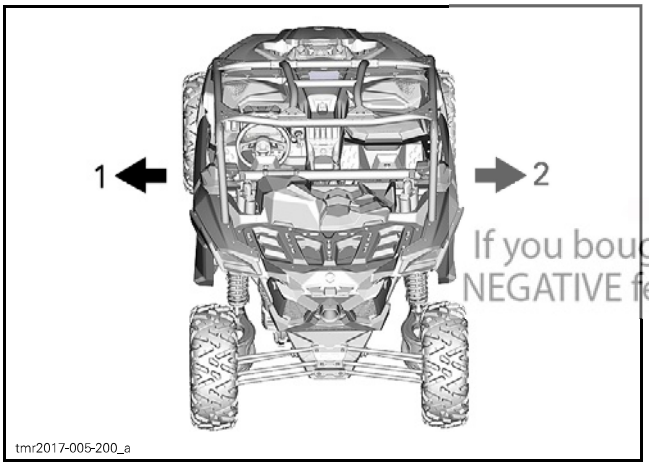

TYPICAL
1. Left
2. Right

This manual uses technical terms which may be different from the ones of the *PARTS CATALOGS*.

When ordering parts always refer to the specific model *PARTS CATALOGS*.

NOTICE **Most fasteners are metric, and most components are built with parts dimensioned using the metric system. Consult the appropriate *PARTS CATALOG* to obtain and use the correct parts and fasteners. Mismatched or incorrect fasteners could cause damage to the vehicle.**

MANUAL LAYOUT

This manual is divided into many major sections as can be seen in the main table of contents at the beginning of the manual.

Each section is divided into various subsections, and again, each subsection has one or more divisions.

Illustrations and photos show the typical construction of various assemblies and, in all cases, may not reproduce the full detail or exact shape of the parts used in a particular model vehicle. However, they represent parts which have the same or a similar function.

Midwest Manuals
Green Manuals
Paperless Manuals
For a Better Tomorrow
If you bought this manual from any other seller please leave them NEGATIVE feedback and notify me at bestshopmanuals@gmail.com

TYPICAL PAGE

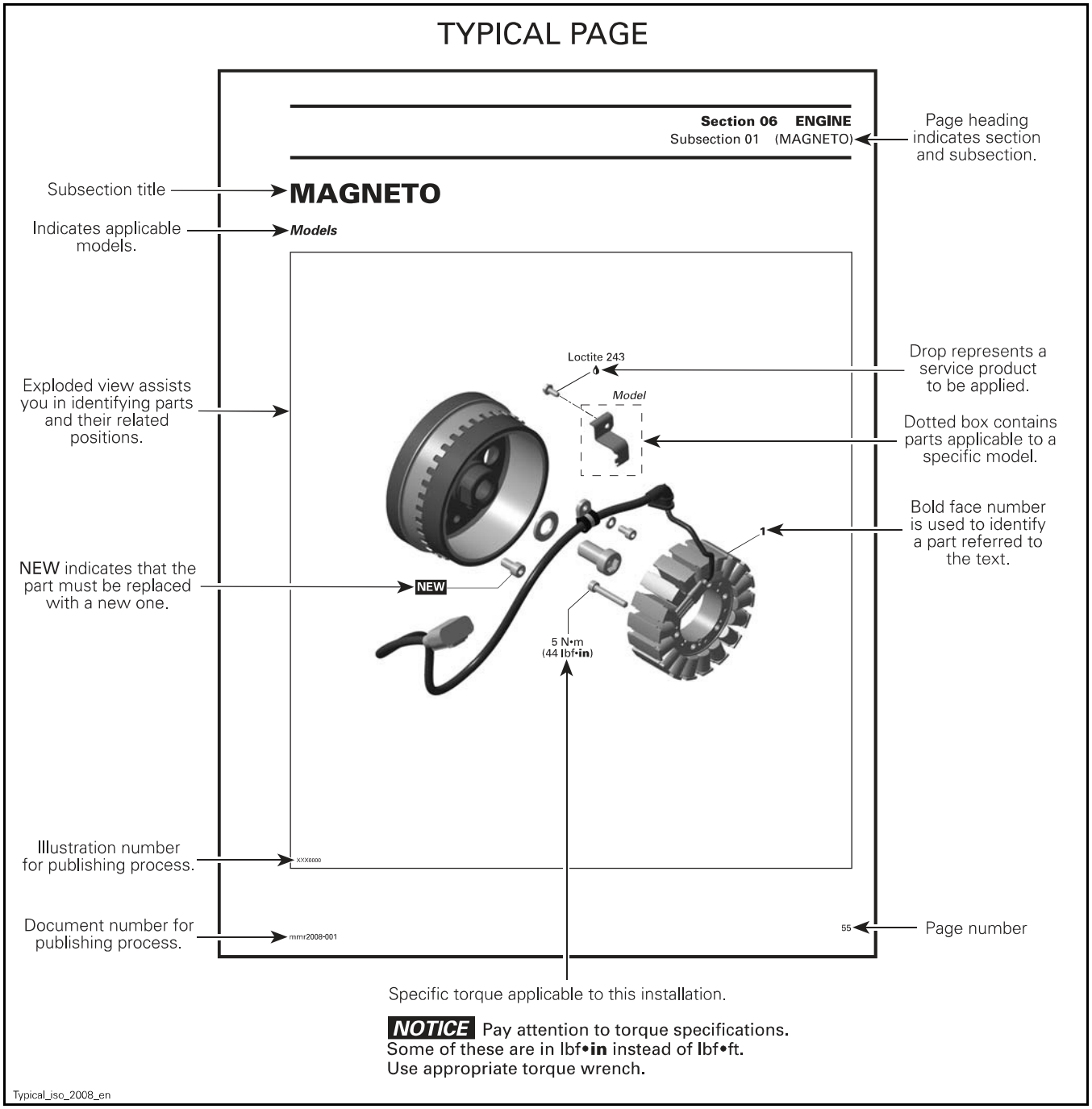

TYPICAL PAGE

Tittle in bold indicates category of information to be carried out.

GENERAL

NOTE: The following procedures can be done without removing the engine.

During assembly/installation, use the torque values and service products as in the exploded views.

Reference to a specific section or subsection.

Clean threads before applying a threadlocker. Refer to *SELF-LOCKING FASTENERS* and *LOCTITE APPLICATION* sections at the beginning of this manual for complete procedure.

⚠ WARNING

Torque wrench tightening specifications must be strictly adhered to.
Locking devices (e.g.: locking tabs, elastic stop nuts, self-locking fasteners, etc.) must be replaced with new ones.

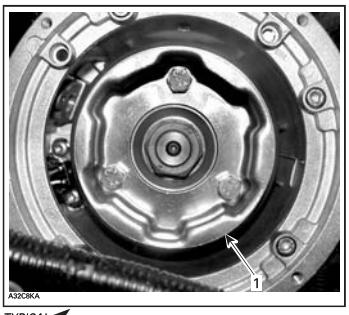

TYPICAL
1. Starting pulley

"TYPICAL" indicates a general view which may not represent exact details.

Call-outs pertaining to above illustration.

PROCEDURES

Indicates component procedures apply to.

MAGNETO FLYWHEEL

Magneto Flywheel Cleaning

Clean all metal components in a non-ferrous metal cleaner.

CAUTION: Clean magneto flywheel using only a clean cloth.

Indicates specific procedure to be carried out.

Magneto Flywheel Removal

Remove muffler, refer to the *EXHAUST SYSTEM* section.

Remove acoustic panel.

Remove rewind starter.

Remove starting pulley **no. 2.**

NOTE: To remove starting pulley bolts, hold magneto flywheel with a socket as shown.



TYPICAL

Illustration always follows text to which it applies.

Models

Remove the connecting flange retaining the rewind starter to the engine housing.

Italic bold face type-setting indicates a procedure applicable to a specific model(s).

Bold face number following part name refers to exploded view at beginning of subsection.

typical_txt_2008_en

TIGHTENING TORQUE

Tighten fasteners to the torque specified in the exploded view(s) and/or in the written procedure. When a torque is not specified, refer to the following table.

⚠ WARNING

Torque wrench tightening specifications must be strictly adhered to.
Locking devices when removed (e.g.: locking tabs, elastic stop nuts, self-locking fasteners, cotter pins, etc.) must be replaced.

In order to avoid a poor assembly, tighten screws, bolts, or nuts in accordance with the following procedure:

1. Manually screw all screws, bolts and/or nuts.
2. Apply half the recommended torque value.
3. Tighten fastener to the recommended torque value.

NOTICE **Be sure to use the recommended tightening torque for the specified fastener used.**

NOTE: When possible, always apply torque on the nut.

NOTE: Always torque screws, bolts and/or nuts using a crisscross pattern when multiple fasteners are used to secure a part (eg. a cylinder head). Some parts must be torqued according to a specific sequence and torque pattern as detailed in the installation procedure.

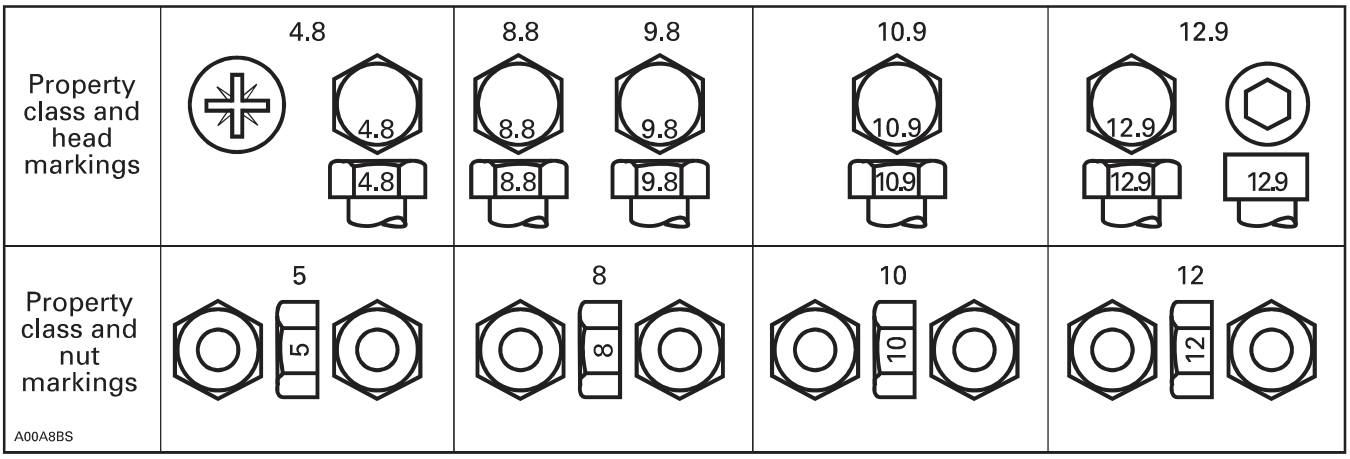

FASTENER SIZE	FASTENER GRADE/TORQUE			
	5.8 Grade	8.8 Grade	10.9 Grade	12.9 Grade
M4	1.5 – 2 N•m (13 – 18 lbf•**in**)	2.5 – 3 N•m (22 – 27 lbf•**in**)	3.5 N•m - 4 N•m (31 lbf•**in** - 35 lbf•**in**)	4 N•m - 5 N•m (35 lbf•**in** - 44 lbf•**in**)
M5	3 N•m - 3.5 N•m (27 lbf•**in** - 31 lbf•**in**)	4.5 N•m - 5.5 N•m (40 lbf•**in** - 49 lbf•**in**)	7 N•m - 8.5 N•m (62 lbf•**in** - 75 lbf•**in**)	8 N•m - 10 N•m (71 lbf•**in** - 89 lbf•**in**)
M6	6.5 N•m - 8.5 N•m (58 lbf•**in** - 75 lbf•**in**)	8 N•m - 12 N•m (71 lbf•**in** - 106 lbf•**in**)	10.5 – 15 N•m (93 – 133 lbf•**in**)	16 N•m (142 lbf•**in**)
M8	15 N•m (133 lbf•**in**)	25 N•m (18 lbf•ft)	32 N•m (24 lbf•ft)	40 N•m (30 lbf•ft)
M10	29 N•m (21 lbf•ft)	48 N•m (35 lbf•ft)	61 N•m (45 lbf•ft)	73 N•m (54 lbf•ft)
M12	52 N•m (38 lbf•ft)	85 N•m (63 lbf•ft)	105 N•m (77 lbf•ft)	128 N•m (94 lbf•ft)
M14	85 N•m (63 lbf•ft)	135 N•m (100 lbf•ft)	170 N•m (125 lbf•ft)	200 N•m (148 lbf•ft)

FASTENER INFORMATION

NOTICE Most components in the vehicles are built with parts dimensioned in the metric system. Most fasteners are metric and must not be replaced by customary fasteners or vice-versa. Mismatched or incorrect fasteners could cause damage to the vehicle or possible personal injury.

SELF-LOCKING FASTENERS PROCEDURE

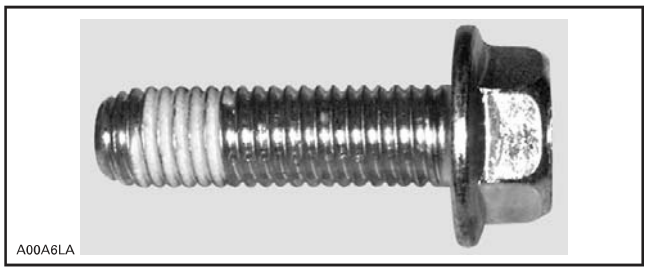

TYPICAL — SELF-LOCKING FASTENER

The following describes common procedures used when working with self-locking fasteners.

Use a metal brush or a tap to properly clean a threaded hole, then use a solvent. Allow the solvent time to act, approximately 30 minutes, then wipe off. Solvent utilization is to ensure proper adhesion of the product used for locking the fastener.

LOCTITE® APPLICATION PROCEDURE

The following describes common procedures used when working with Loctite products.

NOTE: Always use proper strength Loctite product as recommended in this shop manual.

Threadlocker Application for Uncovered Holes (Bolts and Nuts)

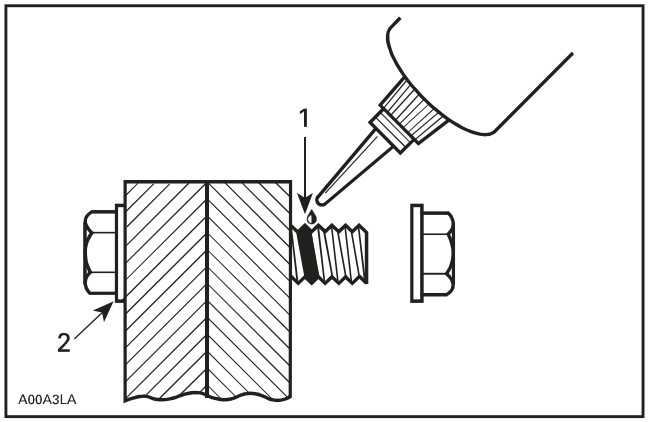

1. Apply here
2. Do not apply

1. Clean threads (bolt and nut) with solvent.
2. Apply LOCTITE 7649 (PRIMER) (P/N 293 800 041) on threads and allow to dry.
3. Choose proper strength Loctite threadlocker.
4. Fit bolt in the hole.
5. Apply a few drops of threadlocker at proposed tightened nut engagement area.
6. Position nut and tighten as required.

Threadlocker Application for Blind Holes

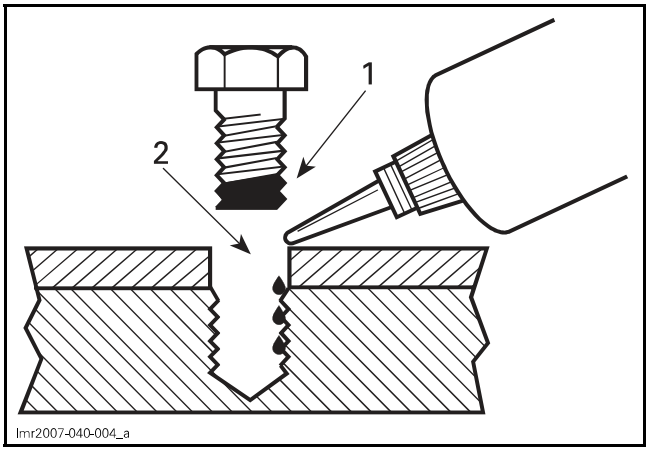

1. On fastener threads
2. On threads and at the bottom of hole

1. Clean threads (bolt and hole) with solvent.
2. Apply LOCTITE 7649 (PRIMER) (P/N 293 800 041) on threads (bolt and nut) and allow to dry for 30 seconds.
3. Choose proper strength Loctite threadlocker.

4. Apply several drops along the threaded hole and at the bottom of the hole.
5. Apply several drops on bolt threads.
6. Tighten as required.

Threadlocker Application for Stud Installation in Blind Holes

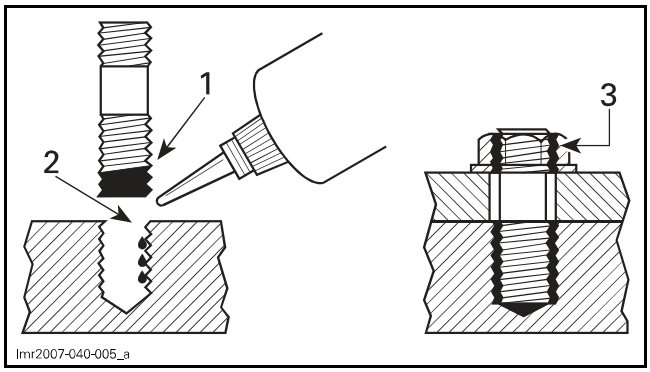

1. On stud threads
2. On threads and in the hole
3. On retaining nut threads

1. Clean threads (stud and hole) with solvent.
2. Apply LOCTITE 7649 (PRIMER) (P/N 293 800 041) on threads and allow to dry.
3. Put 2 or 3 drops of proper strength Loctite threadlocker on female threads and in hole.

NOTE: To avoid a hydro lock situation, do not apply too much Loctite.

4. Apply several drops of proper strength Loctite on stud threads.
5. Install stud.
6. Install cover, part, etc.
7. Apply a few drops of proper strength Loctite on uncovered stud threads.
8. Install and tighten retaining nut(s) as required.

Threadlocker Application for Pre-Assembled Parts

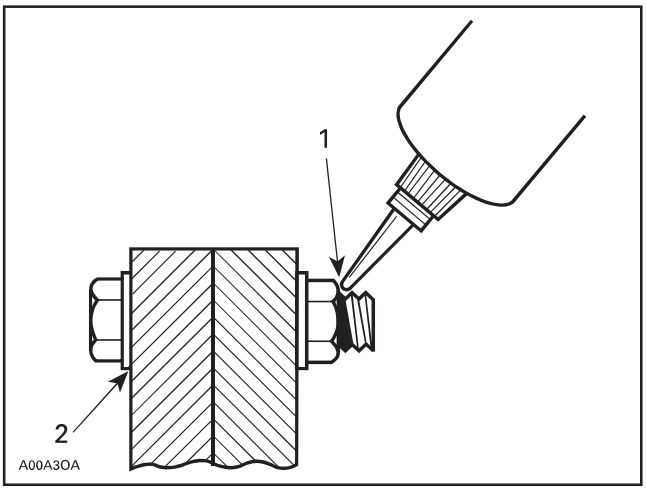

1. Apply here
2. Do not apply

1. Clean bolts and nuts with solvent.
2. Assemble components.
3. Tighten nuts.
4. Apply a few drops of proper strength Loctite on bolt/nut contact surfaces.
5. Avoid touching metal with tip of flask.

NOTE: For preventive maintenance on existing equipment, retighten nuts and apply proper strength Loctite on bolt/nut contact surfaces.

Threadlocker Application for an Adjustment Screw

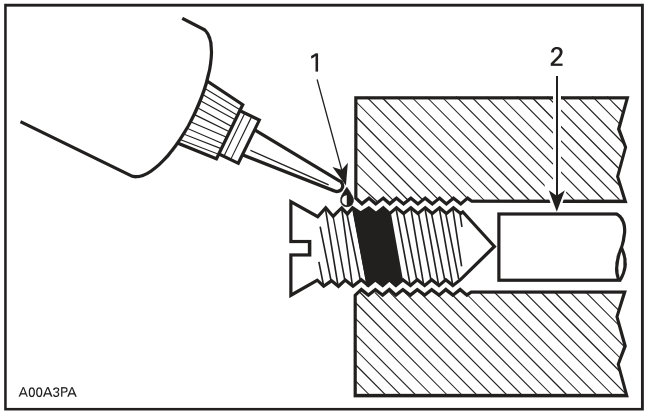

1. Apply here
2. Plunger

1. Adjust screw to proper setting.
2. Apply a few drops of proper strength Loctite threadlocker on screw/body contact surfaces.
3. Avoid touching metal with tip of flask.

NOTE: If it is difficult to readjust, heat screw with a soldering iron (232°C (450°F)).

Application for Stripped Thread Repair

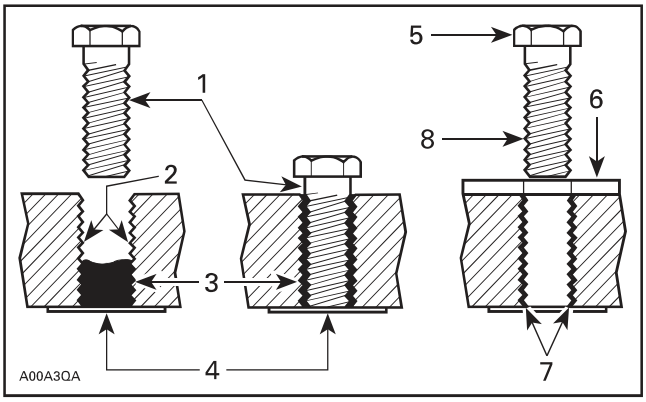

1. *Release agent*
2. *Stripped threads*
3. *Form-A-Thread*
4. *Tapes*
5. *Cleaned bolt*
6. *Plate*
7. *New threads*
8. *Threadlocker*

Standard Thread Repair

Follow instructions on Loctite FORM-A-THREAD 81668 package.

If a plate is used to align bolt:

1. Apply release agent on mating surfaces.
2. Put waxed paper or similar film on the surfaces.
3. Twist bolt when inserting it to improve thread conformation.

NOTE: NOT intended for engine stud repairs.

Repair of Small Holes/Fine Threads

Option 1: Enlarge damaged hole, then follow *STANDARD THREAD REPAIR* procedure.

Option 2: Apply FORM-A-THREAD on the screw and insert in damaged hole.

Permanent Stud Installation (Light Duty)

1. Use a stud of the desired thread length.
2. DO NOT apply release agent on stud.
3. Follow Standard Thread Repair procedure.
4. Allow 30 minutes for Loctite FORM-A-THREAD to cure.
5. Complete part assembly.

Gasket Compound Application

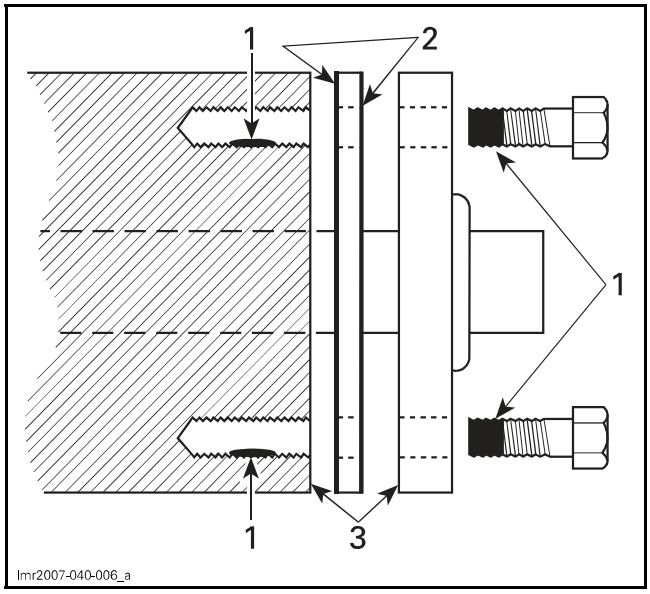

1. *Proper strength Loctite*
2. *Loctite Primer N (P/N 293 800 041) and Gasket Eliminator 518 (P/N 293 800 038) on both sides of gasket*
3. *Loctite Primer N only*

1. Remove old gasket and other contaminants using LOCTITE CHISEL (GASKET REMOVER) (P/N 413 708 500). Use a mechanical means only if necessary.

NOTE: Avoid grinding.

2. Clean both mating surfaces with solvent.
3. Spray Loctite Primer N on both mating surfaces and on both sides of gasket and allow to dry 1 or 2 minutes.
4. Apply LOCTITE 518 (P/N 293 800 038) on both sides of gasket, using a clean applicator.
5. Place gasket on mating surfaces and assemble parts immediately.

NOTE: If the cover is bolted to blind holes, apply proper strength Loctite in the hole and on threads. Tighten fastener.

If holes are sunken, apply proper strength Loctite on bolt threads.

6. Tighten as usual.

Threadlocker Application for Mounting on a Shaft

Mounting with a Press

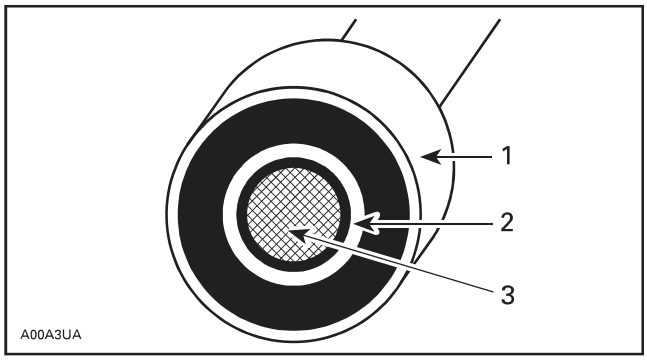

1. Bearing
2. Proper strength Loctite
3. Shaft

1. Clean shaft external contact surface.
2. Clean internal contact surface of part to be installed on shaft.
3. Apply a strip of proper strength Loctite on circumference of shaft contact surface at insertion or engagement point.

NOTE: Retaining compound is always forced out when applied on shaft.

4. DO NOT use antiseize Loctite or any similar product.
5. No curing period is required.

Mounting in Tandem

1. Apply retaining compound on internal contact surface (bore) of parts to be installed.
2. Continue parts assembly as per previous illustration.

Threadlocker Application for Case-In Components (Metallic Gaskets)

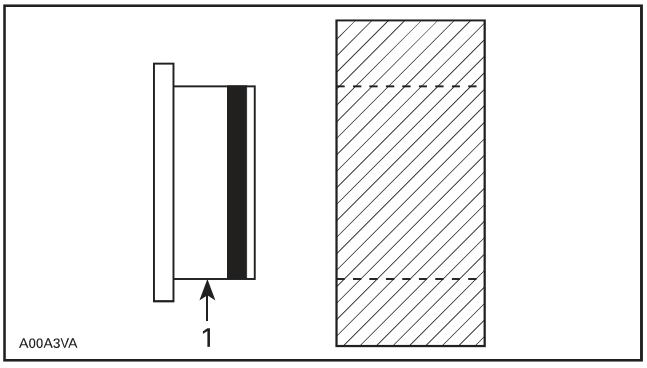

1. Proper strength Loctite

1. Clean inner housing diameter and outer gasket diameter.
2. Spray housing and gasket with LOCTITE 7649 (PRIMER) (P/N 293 800 041).
3. Apply a strip of proper strength Loctite on leading edge of outer metallic gasket diameter.

NOTE: Any Loctite product can be used here. A low strength liquid is recommended as normal strength and gap are required.

4. Install according to standard procedure.
5. Wipe off excess product.
6. Allow 30 minutes for product to cure.

NOTE: Normally used on worn-out housings to prevent leaking or sliding.

It is generally not necessary to remove gasket compound applied on outer gasket diameter.

PERIODIC MAINTENANCE SCHEDULE

Maintenance is very important for keeping your vehicle in safe operating condition. Proper maintenance is the owner's responsibility. The vehicle should be serviced as per the maintenance schedule.

The following message appears in the gauge after every 50 hours of operation, to remind you of maintenance requirements: MAINTENANCE SOON. To erase message, use the BRP diagnostic software or refer to *ERASING THE MAINTENANCE REQUIRED MESSAGE* in this subsection.

The maintenance schedule does not exempt the pre-ride inspection.

⚠ WARNING

Failure to properly maintain the vehicle according to the maintenance schedule and procedures can make it unsafe to operate.

MAINTENANCE

ERASING THE MAINTENANCE REQUIRED MESSAGE

1. Select PARK.
2. Briefly press the START button to activate the electrical system.

NOTE: The steps 3 through 9 must be completed within **5 seconds**.

3. Press override switch and HOLD.
4. Press and release brake pedal.
5. Release override switch.
6. Press and release brake pedal.
7. Press override switch and HOLD.
8. Press and release brake pedal.
9. Release override switch.

SEVERE DUSTY CONDITIONS

Air Filter Maintenance Guideline

Air filter maintenance should be adjusted according to riding conditions.

Air filter maintenance must be increased in frequency in the following dusty conditions:

– Riding on dry sand
– Riding on dry dirt covered surfaces
– Riding on dry gravel roads or similar conditions.

NOTE: Riding in a group in these conditions would increase even more the air filter maintenance.

MAINTENANCE SCHEDULE LEGEND

Operation in trail riding conditions
Operation in severe riding conditions (dusty or muddy) or carrying heavy loads condition

MAINTENANCE SCHEDULE

Make sure to perform proper maintenance at recommended intervals as indicated in the tables. Some items of the maintenance schedule must be performed in function of the calendar, regardless of the distance or time of operation.

EVERY YEAR OR 3 000 KM (2,000 MI) OR 100 HOURS (whichever comes first)
EVERY YEAR OR 1 500 KM (1,000 MI) OR 50 HOURS (whichever comes first)
Check fault codes
Perform all items indicated in the pre-ride inspection
Replace engine oil and filter
Inspect gearbox oil level and look for contamination
Inspect and clean engine air filter. Replace if needed
Inspect steering system for abnormal play and damages (column, rack and pinion, bellows)
Inspect the tie rod ends and ball joints for play and inspect boots condition
Inspect wheel bearings for abnormal play
Inspect suspension arm bushing and wear plates. Replace if needed
Inspect front and rear shock absorber spherical bearing O-rings (if damaged, clean, lubricate and reinstall O-rings)
Lubricate suspension arms and stabilizer bar bushings (Front / Rear)
Inspect CV joints and rubber boots condition (check for abnormal play in the joints and for cuts in the rubber boots)
Inspect and clean the brake system (fluid level, pads, discs, lines, calipers)
Inspect front differential oil level and look for contamination and overall condition (vents, mount bolt torque, seals)
Inspect battery condition and connections
Inspect propeller shaft U-joints for abnormal play
Clean exhaust pipes and muffler area
Clean muffler spark arrester
Replace fuel vent breather filter
Inspect CVT drive belt and clean CVT pulleys
Inspect, clean and lubricate drive pulley needle bearing
Inspect centrifugal levers and rollers of drive pulley
Inspect input and output shaft seals (engine, gearbox, differential)
Inspect beadlock screws (if equipped)
Inspect rear wheel scrapers wear plates
Tighten cage fasteners
Inspect, clean and validate operation of seat belts retractors, buckles and locking tabs
Verify coolant level and adjust if needed

PERFORM AT THE FIRST 3 000 KM (2,000 MI)AND AT 6 000 KM (4,000 MI) THEN FOLLOW THE REGULAR SCHEDULE
PERFORM AT THE FIRST 1 500 KM (1,000 MI) AND AT 3 000 KM (2,000 MI) THEN FOLLOW THE REGULAR SCHEDULE
Replace gearbox oil

EVERY TWO YEAR OR 6 000 KM (4,000 MI) OR 200 HOURS (whichever comes first)
EVERY TWO YEAR OR 3 000 KM (2,000 MI) OR 100 HOURS (whichever comes first)
Check fault codes
Perform all items indicated in the pre-ride inspection
Replace front differential oil
Replace gearbox oil.
Replace brake fluid (must be performed every 2 years)
Test engine coolant strength + level
Verify fuel system for leaks
Verify fuel pump pressure (idle and wide open throttle)
Replace spark plugs
Clean vehicle speed sensor

EVERY 5 YEAR OR 12 000 KM (8,000 MI) (whichever comes first)
EVERY 5 YEAR OR 6 000 KM (4,000 MI) (whichever comes first)
Replace engine coolant

PERIODIC MAINTENANCE PROCEDURES

SERVICE TOOLS

Description	Part Number	Page
TEST CAP	529 035 991	8
VACUUM/PRESSURE PUMP	529 021 800	8, 20

SERVICE PRODUCTS

Description	Part Number	Page
BRAKE FLUID GTLMA DOT4	293 600 131	19
COSMO RUBBER GREASE	715 900 399	19
ISOFLEX GREASE TOPAS NB 52	293 550 021	10
LOCTITE 767 (ANTISEIZE LUBRICANT)	293 800 070	15
LONG LIFE ANTIFREEZE(F)	619 590 204	6
LONG LIFE ANTIFREEZE	219 702 685	6
SUSPENSION GREASE	293 550 033	16–17
XPS 4-STROKE SYNTH. BLEND OIL	293 600 121	3
XPS 4-STROKE SYNTHETIC OIL	293 600 112	3
XPS BRAKES AND PARTS CLEANER (USA)	219 701 705	18–19
XPS BRAKES AND PARTS CLEANER	219 701 776	18–19
XPS SYNTHETIC GEAR OIL (75W 140)	293 600 140	12
XPS SYNTHETIC GEAR OIL (75W 90)	293 600 043	14
XPS SYNTHETIC GREASE	293 550 010	19

GENERAL

This subsection provides:
- Fluid level verifications
- Maintenance procedures.

The following systems should be serviced according to the *PERIODIC MAINTENANCE SCHEDULE*.

PROCEDURES

AIR INTAKE SYSTEM

Replacing the Air Filter

NOTICE Never modify the air intake system. Otherwise, engine performance degradation or damage can occur. The engine is calibrated to operate specifically with these components.

Air Filter Replacement Guideline

Air filter replacement should be adjusted according to riding conditions as it is critical to ensure proper engine performance and life span.

Air filter replacement frequency must be increased for the following dusty conditions:
- Riding on dry sand
- Riding on dry dirt covered surfaces
- Riding on dry gravel roads or similar conditions.

NOTE: Riding in a group in these conditions would increase even more the air filter replacement requirement.

Removing the Air Filter

Pull the outer seal outwards using the fabric tabs.

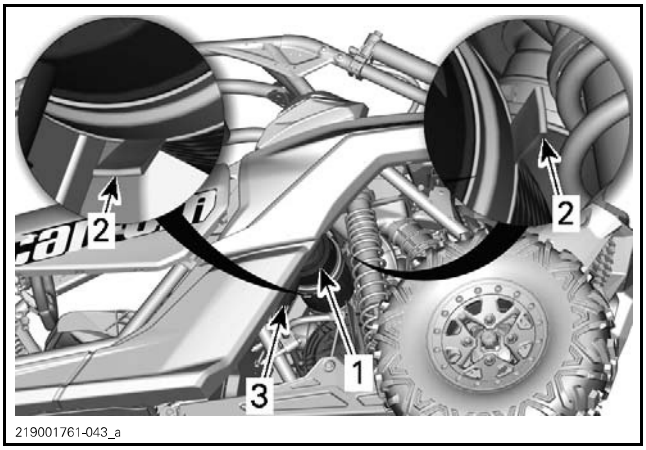

219001761-043_a

LH REAR OF VEHICLE
1. *Air filter cover*
2. *Fabric tabs*
3. *Duckbill valve*

Pull on the yellow plastic tab to unlock the filter cover.

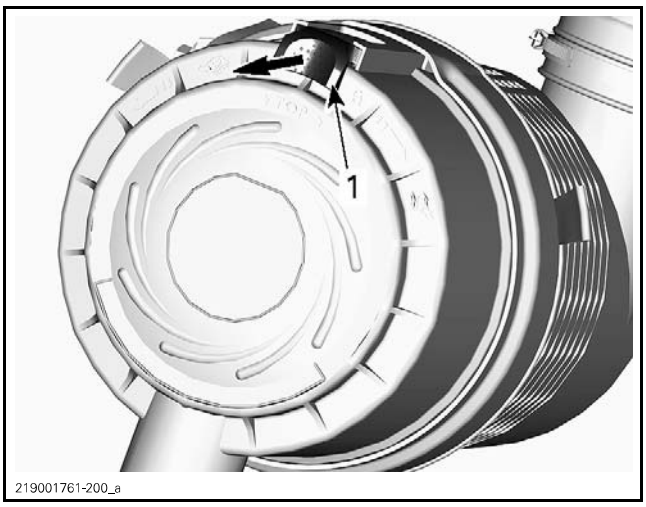

219001761-200_a

1. *Plastic tab*

Remove the filter cover by turning it counterclockwise.

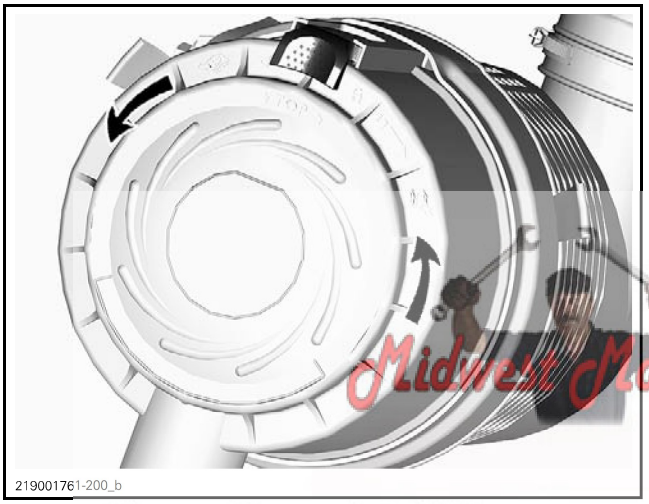
219001761-200_b

Remove the filter cartridge.

Cleaning the Air Filter Housing

Inspect air filter housing for cleanliness.

NOTICE **If sand or other particles are found in air filter housing, clean it using a vacuum cleaner.**

Cleaning the Air Filter

Clean engine air filter by tapping out heavy dust from paper element, this will allow dirt and dust to get out of the paper filter.

NOTICE **It is not recommended to blow compressed air on the paper element; this could damage the paper fibers and reduce its filtration ability when used in dusty environments. If engine air filter is too dirty and cannot be cleaned following the recommended procedure, it should be replaced.**

Installing the Engine Air Filter

Install air filter cartridge.

Install filter cover with the "TOP" mark upwards (duckbill valve downwards). Turn cover clockwise to secure it.

Lock the cover by pushing the plastic tab inwards.

Slide the outer seal in place using the fabric tabs.

EXHAUST SYSTEM

Cleaning the Muffler Spark Arrester

The mufflers must be periodically purged of accumulated carbon.

⚠ **CAUTION** **Never perform this operation immediately after the engine has been running as exhaust system is very hot.**

Remove retaining screws securing muffler cover in place and remove muffler cover.

Pull out spark arrester and remove carbon deposits using a brush.

Midwest Manuals
Green Manuals
Paperless Manuals
For a Better Tomorrow
If you bought this manual from any other seller please leave them NEGATIVE feedback and notify me at bestshopmanuals@gmail.com

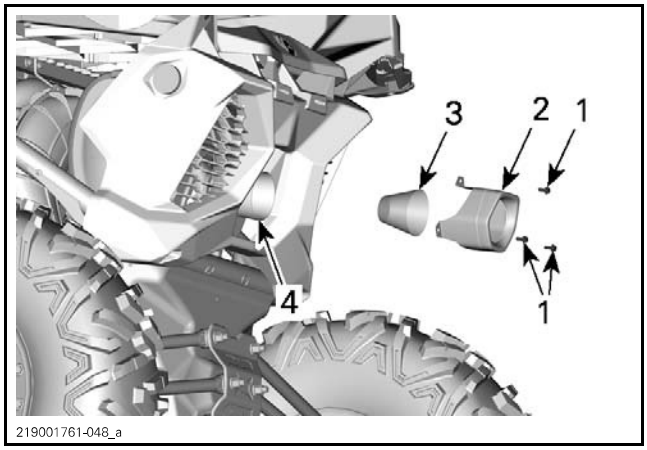

1. Retaining screws
2. Muffler cover
3. Spark arrester

NOTICE **Use a soft brush and be careful to avoid damaging spark arrester mesh.**

Inspect mesh of spark arrester for any damage. Replace as needed.

Inspect spark arrester chamber in muffler. Remove any debris as needed.

Reinstall the spark arrester in the reverse of the removal procedure. Tighten retaining screws to specification.

TIGHTENING TORQUE	
Muffler cover screws	10 N•m ± 2 N•m (89 lbf•**in** ± 18 lbf•**in**)

LUBRICATION SYSTEM

Verifying the Engine Oil Level

NOTICE **Operating the engine with an improper level may severely damage engine.**

With the engine at normal operating temperature, place vehicle on a level surface and check the oil level as follows:

1. Start engine and let it idle for at least 20 seconds.
2. Stop engine.
3. Unscrew dipstick then remove it and wipe clean.

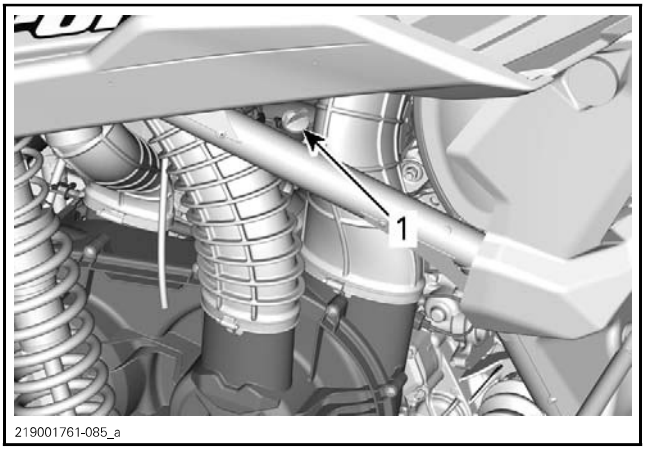

LH REAR OF VEHICLE
1. Dipstick

4. Reinstall dipstick, screw it in completely.
5. Remove dipstick and check oil level. It should be near or equal to the upper mark.

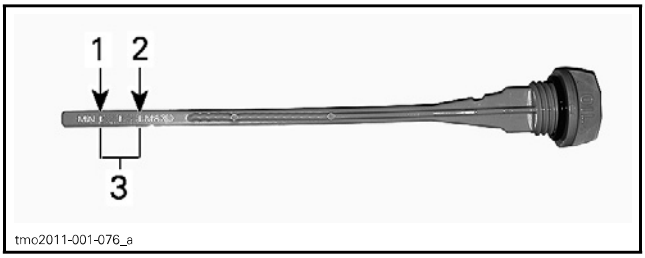

TYPICAL
1. MIN
2. MAX
3. Operating range

To add oil, remove the dipstick. Place a funnel into the dipstick tube.

Add a small amount of recommended oil and recheck oil level.

Repeat the above procedures until oil level reaches the dipstick's upper mark.

NOTE: Do not overfill. Wipe off any spillage.

Properly tighten dipstick.

Recommended Engine Oil

RECOMMENDED ENGINE OIL	
SEASON	TYPE
Summer	XPS 4-STROKE SYNTH. BLEND OIL (P/N 293 600 121)
All seasons	XPS 4-STROKE SYNTHETIC OIL (P/N 293 600 112)

NOTE: The XPS oil is specially formulated to meet the lubrication requirements of this engine. BRP recommends the use of its XPS 4-stroke oil. If XPS engine oil is not available, use a 4-stroke SAE 5W 40 engine oil that meets or exceeds the requirements for API service classification SJ, SL, SM or SN. Always check the API service label certification on the oil container it must contain at least one of the above standards.

NOTICE **Damages caused by the use of oil not suitable for this engine may not be covered by the BRP limited warranty.**

Changing the Engine Oil

Oil change and oil filter replacement should be done with a warm engine.

⚠ CAUTION **The engine oil can be very hot. Wait until engine oil is warm.**

Ensure vehicle is on a level surface.

Remove dipstick.

Place a drain pan under the engine drain plug area.

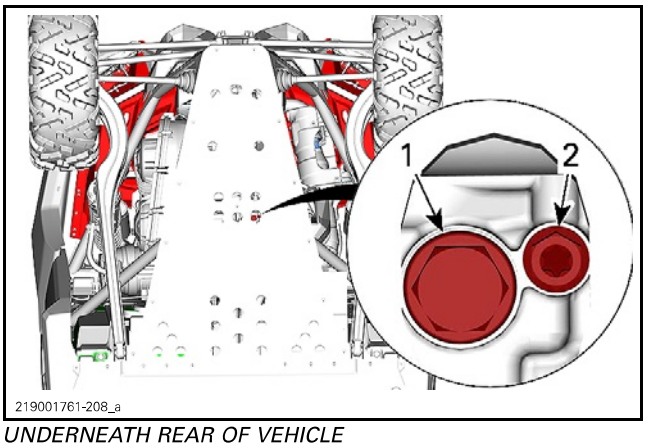

UNDERNEATH REAR OF VEHICLE
1. *Magnetic drain plug*
2. *Secondary drain plug*

Clean the drain plug area.

NOTE: A funnel can be used between the drain holes and the skid plate to avoid spillage.

Unscrew drain plugs and discard the gasket rings.

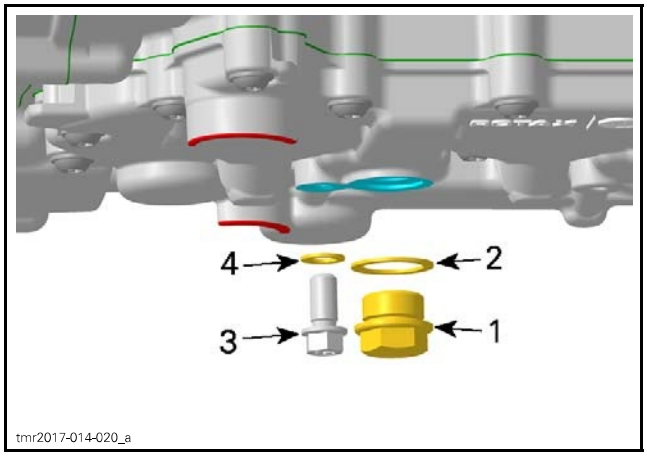

1. *Magnetic drain plug*
2. *Gasket ring*
3. *Secondary drain plug*
4. *Gasket ring*

Allow oil to drain completely from the crankcase.

Clean the magnetic drain plug from metal shavings and residue. Presence of debris gives an indication of internal engine damage.

Install a NEW gasket rings on the drain plugs.

NOTICE **Never use the gasket ring a second time. Always replace by a NEW one.**

Tighten drain plugs to specification.

TIGHTENING TORQUE	
Secondary drain plug	15 N•m ± 2 N•m (133 lbf•**in** ± 18 lbf•**in**)
Magnetic drain plug	30 N•m ± 3 N•m (22 lbf•ft ± 2 lbf•ft)

Replace oil filter. Refer to *REPLACING THE ENGINE OIL FILTER* in this subsection.

Refill engine with recommended engine oil.

ENGINE OIL CAPACITY	
Engine oil and engine oil filter replacement	3.5 L (3.7 qt (U.S. liq.))

After filling, check the oil level, refer to *VERIFYING THE ENGINE OIL LEVEL* in this subsection.

Dispose oil and filter as per your local environmental regulations.

Replacing the Engine Oil Filter

Oil Filter Access

Access the oil filter by the RH rear of the vehicle.

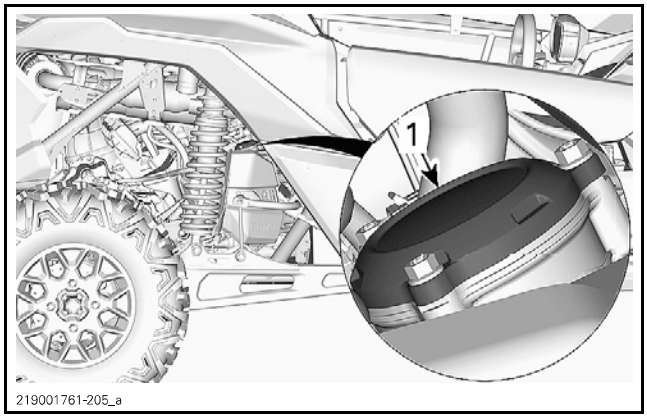

1. Oil filter cover

Removing the Oil Filter

Clean oil filter area.

Remove the following components.

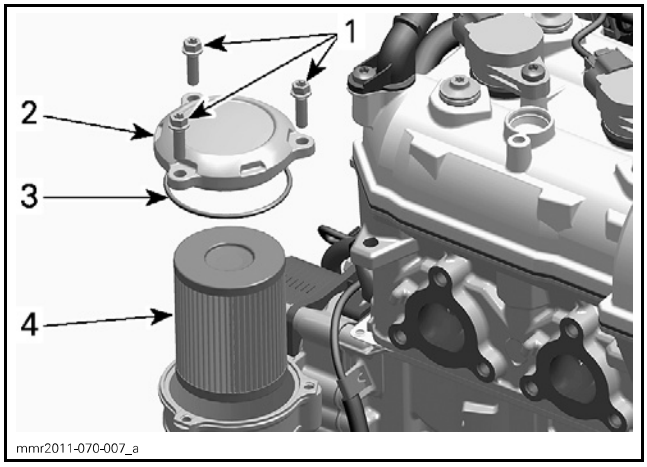

1. Oil filter cover screw
2. Oil filter cover
3. O-ring
4. Oil filter

Installing the Oil Filter

Check and clean the oil filter inlet and outlet area for dirt and other contaminations.

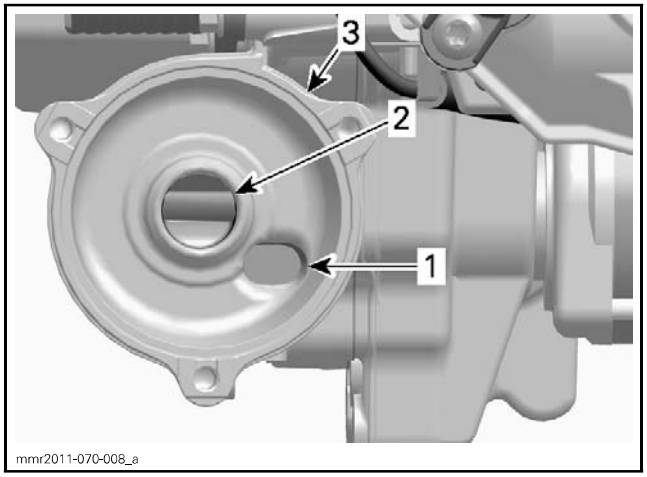

1. Oil inlet orifice from the oil pressure pump
2. Oil outlet orifice to the engine lubrication system
3. Oil filter receptacle

Install a **NEW** O-ring on oil filter cover.

Install the filter into the cover.

Apply engine oil on O-ring and oil filter seal.

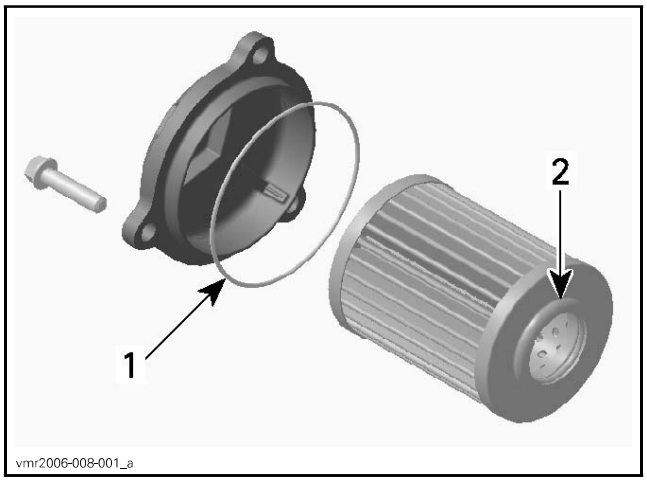

1. Slightly oil
2. Slightly oil

Install the cover on the engine.

Tighten oil filter cover screws to specification.

TIGHTENING TORQUE	
Oil filter cover screws	10 N•m ± 1 N•m (89 lbf•**in** ± 9 lbf•**in**)

COOLING SYSTEM

Recommended Engine Coolant

BRP RECOMMENDED PRODUCT	
Finland, Norway and Sweden	LONG LIFE ANTIFREEZE(F) (P/N 619 590 204)
All other countries	LONG LIFE ANTIFREEZE (P/N 219 702 685)
Alternative, or if not available	Distilled water and antifreeze solution (50% distilled water, 50% antifreeze)

NOTICE Always use ethylene-glycol antifreeze containing corrosion inhibitors specifically formulated for internal combustion aluminum engines.

Verifying the Engine Coolant Level

⚠ WARNING

Check coolant level with engine cold.

1. Place vehicle on a level surface.
2. Remove service cover by unlatching the rear lifting it upwards.

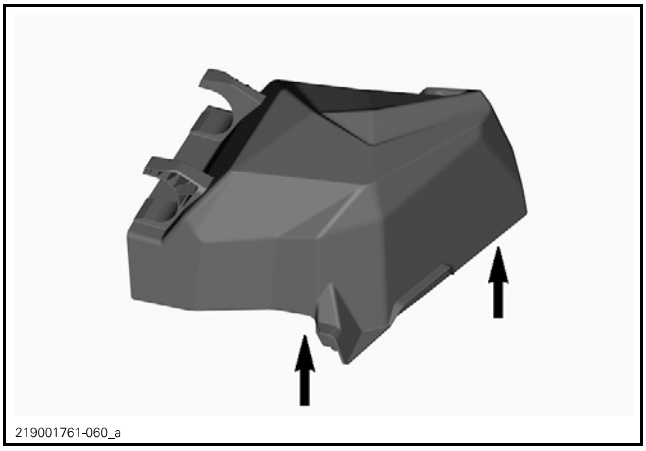

LIFTING REAR OF SERVICE COVER

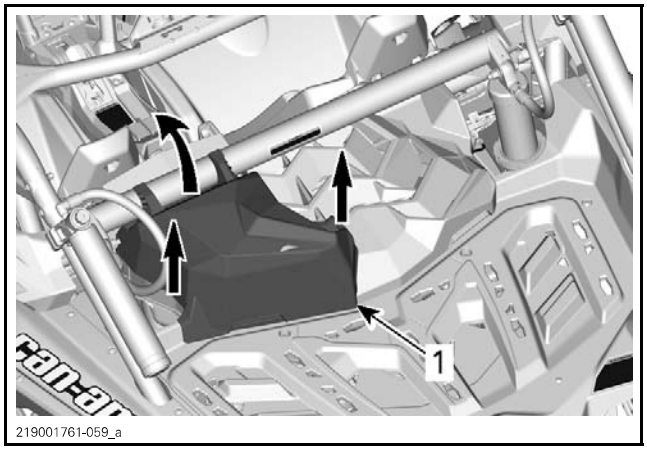

1. Service cover

3. Remove pressure cap.

⚠ WARNING

In order to avoid potential burns, do not remove the pressure cap if the engine is hot.

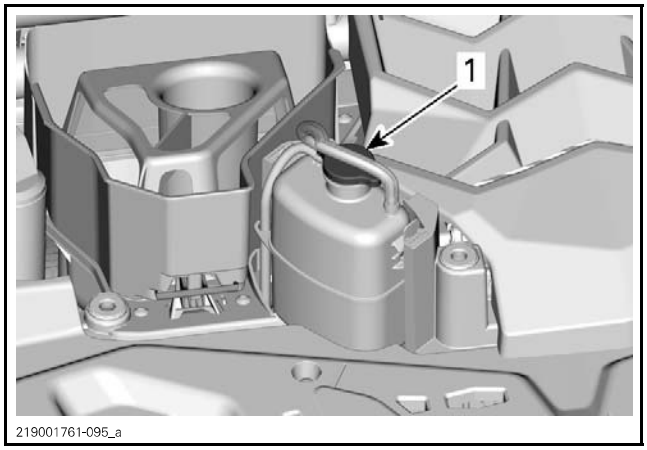

1. Pressure cap

4. Ensure cooling system is full up to the MAX line.



5. Add coolant in system as necessary. Use a funnel to avoid spillage. **Do not overfill.**
6. Reinstall pressure cap on cooling tank.

Checking the Engine Coolant Specific Gravity

Remove pressure cap.

Use an antifreeze tester to test coolant strength.

MINIMUM RECOMMENDED COOLANT STRENGTH
-30°C (-22°F)

Replacing the Engine Coolant

Draining the Cooling System

⚠ WARNING

In order to avoid potential burns, do not remove the pressure cap or loosen the coolant drain plug if the engine is hot.

1. Lift the rear of the vehicle approximately 30 cm (12 in).

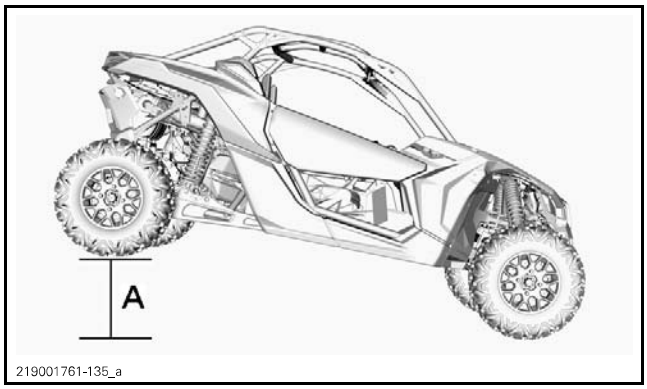

A. 30 cm (12 in)

2. Place a drain pan under the lower hose of the radiator.

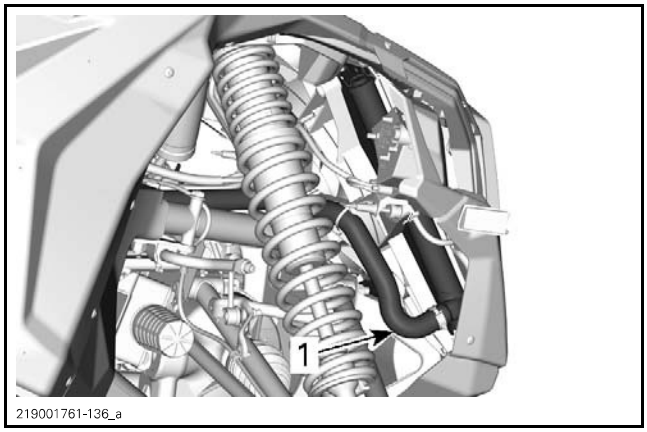

3. Install a large hose pincher on the lower hose of the radiator.

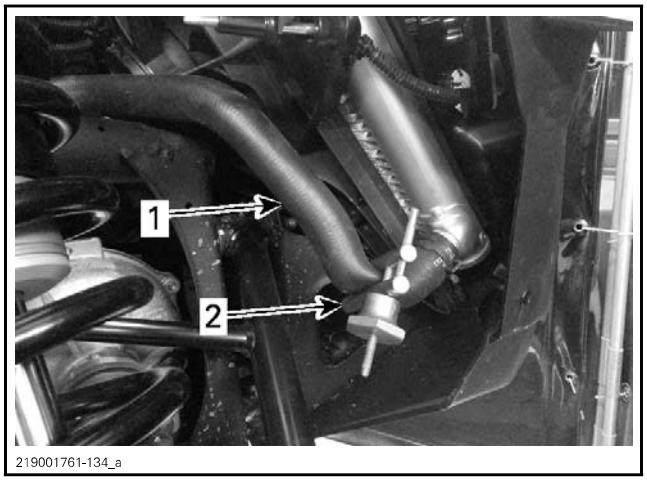

1. Lower radiator hose
2. Hose pincher

4. Slowly detach hose from radiator.
5. Remove coolant bottle pressure cap.

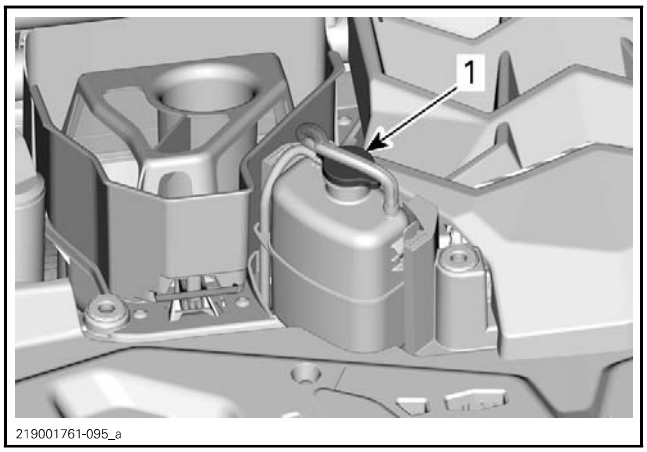

1. Pressure cap

6. Wait until the coolant flow stops or decreases.
7. Remove the hose pincher to drain the rest of the coolant.
8. Install radiator hose clamp.

TIGHTENING TORQUE	
Radiator hose clamp	2.5 N•m to 3.5 N•m (22 lbf•**in** to 31 lbf•**in**)

9. Fill cooling system with coolant, refer to *BLEEDING AND REFILLING THE COOLING SYSTEM* procedure.

Bleeding and Refilling the Cooling System

1. Remove the pressure cap.

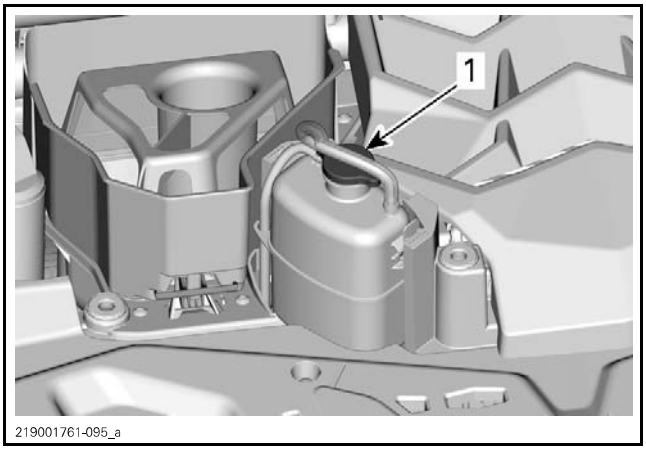

1. Pressure cap

2. Fill the cooling system until level reaches the MAX line on the coolant reservoir.



3. Install pressure cap.
4. Run engine at idle with the pressure cap **on** until the cooling fan cycles 2 times.
5. Depress throttle pedal two or three times.
6. Stop engine and let it cool down.

Add coolant if necessary.

⚠ WARNING

In order to avoid potential burns, do not remove the pressure cap if the engine is hot.

7. After the next ride following this procedure, check coolant level. Add coolant as required. Refer to *VERIFYING THE ENGINE COOLANT LEVEL*.

Inspecting the Cooling System

1. Check general condition of hoses and clamps for tightness.
2. Check the leak indicator hose for oil or coolant.

NOTE: Leaking coolant indicates a defective rotary seal. Leaking oil indicates a defective oil seal. If either seal is leaking, both seals must be replaced at the same time. Refer to *WATER PUMP* in the *COOLING SYSTEM - ENGINE* subsection.

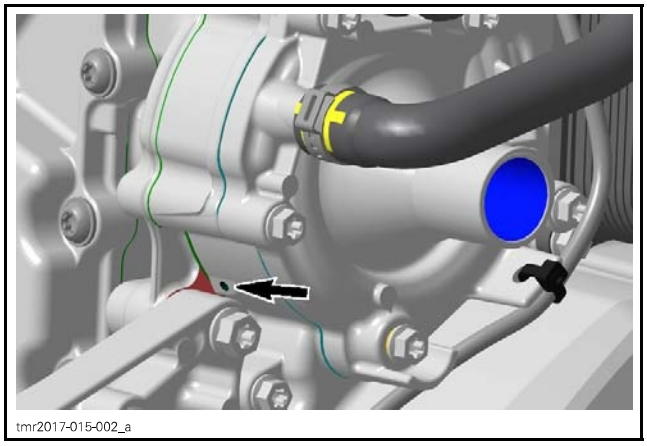

LEAK INDICATOR HOLE

3. Carry out a *CHECKING THE ENGINE COOLANT SPECIFIC GRAVITY* as detailed in this subsection.
4. Carry out a *PRESSURE CAP TEST* as detailed in this subsection.
5. Replace engine coolant if contaminated.

NOTE: Engine coolant should be replaced every 2 years or if contaminated.

Performing a Cooling System Leak Test

⚠ WARNING

To avoid potential burns, do not remove the pressure cap or loosen the cooling system drain plug if the engine is hot.

1. Open service cover.
2. Remove cooling system pressure cap.
3. Install test cap on filler neck.

REQUIRED TOOL	
TEST CAP (P/N 529 035 991)	

4. Pressurize cooling system.

REQUIRED TOOL	
VACUUM/PRESSURE PUMP (P/N 529 021 800)	

COOLING SYSTEM LEAK TEST
103 kPa (15 PSI)

If there is no pressure drop after 10 minutes, there is no leak in the cooling system.

If the pressure drops, check all hoses, radiator, cylinders and engine base for coolant leaks or air bubbles.

Check the leak indicator hole if there is oil or coolant leaking.

NOTE: In general leaking coolant indicates a damaged rotary seal. Leaking oil indicates a damaged oil seal. If either seal is leaking, both seals must be replaced at the same time. Refer to *WATER PUMP* in *COOLING SYSTEM - ENGINE* subsection.

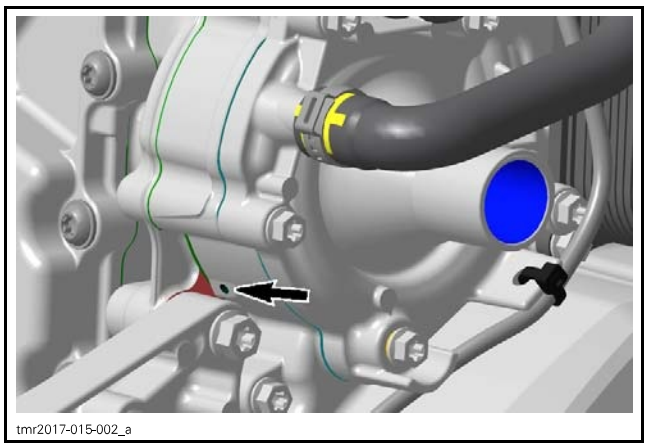

LEAK INDICATOR HOLE

Testing the Pressure Cap

Test the pressure cap using a cooling system tester.

Replace the cap if it does not hold the pressure, or if it opens at a relief pressure that is too low or too high.

PRESSURE CAP RELIEF PRESSURE
Approximately 110 kPa (16 PSI)

CONTINUOUSLY VARIABLE TRANSMISSION (CVT)

CVT Air Filter Cleaning

Removing the CVT Air Filter

Open the air box cover.

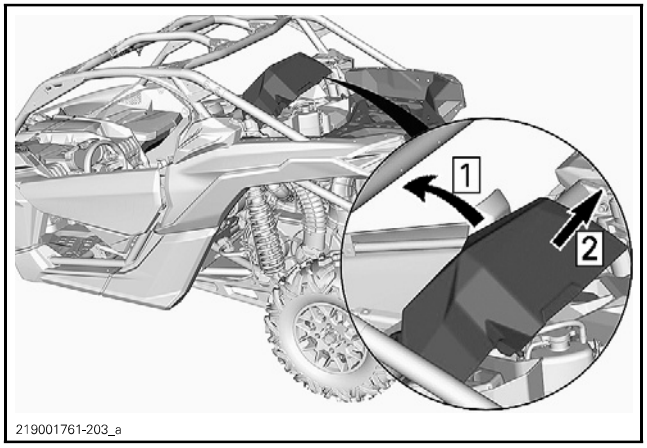

Remove CVT filter from vehicle.

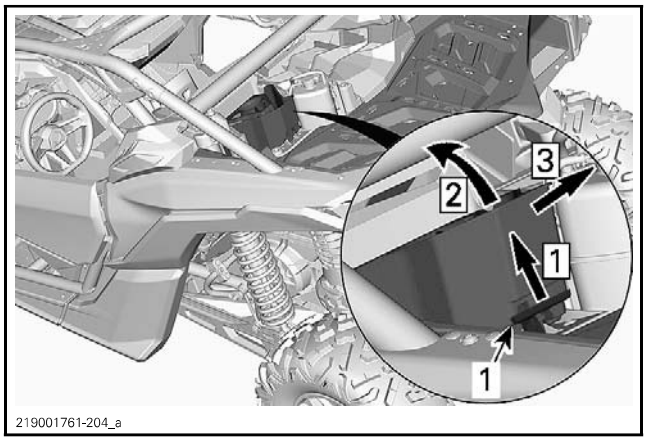

1. CVT air filter

Step 1: Unlatch
Step 2: Lift the rear part
Step 3: Pull off

Inspecting and Cleaning the CVT Air Filter

Inspect filter and replace if necessary.

Remove CVT filter. Refer to *REMOVING THE CVT FILTER* and clean it using soft soap and water then rinse with water.

Gently shake off excess water and allow filter to dry at room temperature.

Installing the CVT Air Filter

Reinstall filter:

– Insert the three tabs at front of the filter in the corresponding slots
– Securely latch the filter.

Reinstall the air box cover. Make sure it is properly secured.

Inspecting the Drive Belt

Inspect belt for cracks, fraying or abnormal wear. Replace if necessary.

Check drive belt width at cord level. Replace if it is out of specification (see table below).

DRIVE BELT WIDTH	
SERVICE LIMIT	30 mm (1.181 in)

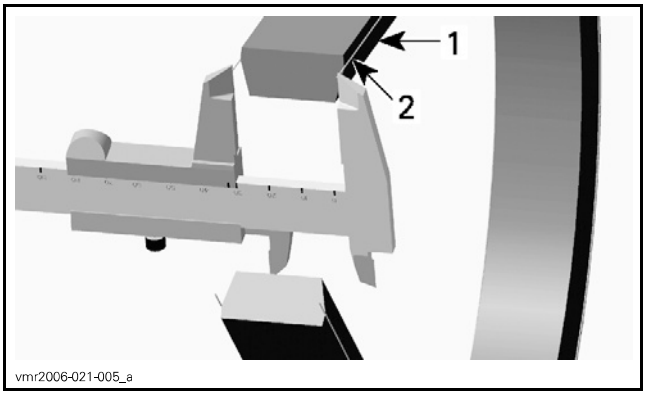

1. Drive belt
2. Cord in drive belt

Drive Pulley, Driven Pulley and One-way Bearing Maintenance

Drive and Driven Pulley

Clean and inspect drive and driven pulley sheaves. Refer to *CONTINUOUSLY VARIABLE TRANSMISSION (CVT)* subsection.

Hub

Clean parts.

Lubricate needle bearing.

NOTICE Only slightly grease the needle bearing. Do not apply in excess as it will spread out and lead to CVT malfunction.

NEEDLE BEARING LUBRICATION	
Service product	ISOFLEX GREASE TOPAS NB 52 (P/N 293 550 021)

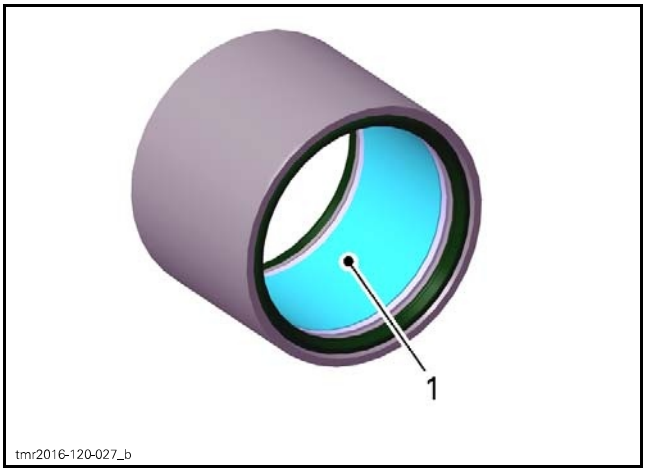

1. Lubricate needle bearing

Cleaning the CVT Air Inlet/Outlet

1. Remove CVT cover, refer to *CONTINUOUSLY VARIABLE TRANSMISSION (CVT)* subsection.
2. Inspect and clean the air inlet and outlet openings from inside the CVT cover.

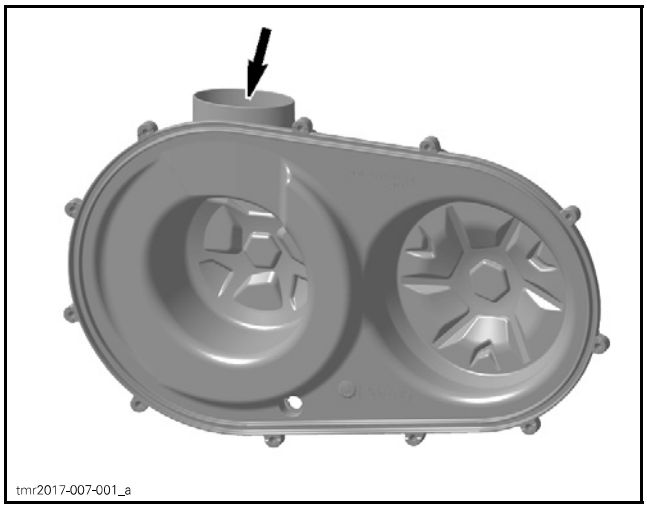

CVT COVER - CVT INLET OPENING

3. Inspect and clean the air inlet and outlet openings from inside the inner CVT air guide.

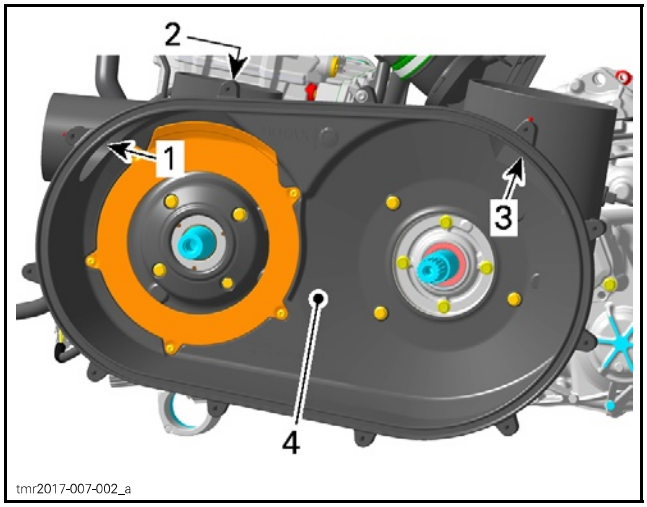

1. Air inlet opening
2. Air inlet opening
3. Air outlet opening
4. CVT air guide

4. Inspect and clean the aft end of air outlet duct at rear of the vehicle.

NOTE: If a lot of debris or grime are found in the CVT system, it may be necessary to remove the ducts and thoroughly clean them.

5. Reinstall CVT cover.

GEARBOX

Verifying the Gearbox Oil Level

Place the vehicle on a level surface. Select PARK position.

Check the gearbox oil level by removing the gearbox oil level plug located at the rear of vehicle, on the RH side.

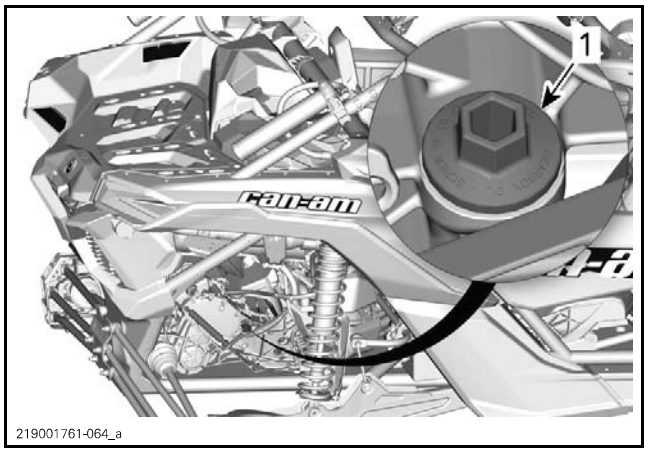

1. Gearbox oil level plug

Reinstall the plug, screw in it completely.

Remove plug again and check oil level on the dipstick. It should be near or equal to the upper mark.

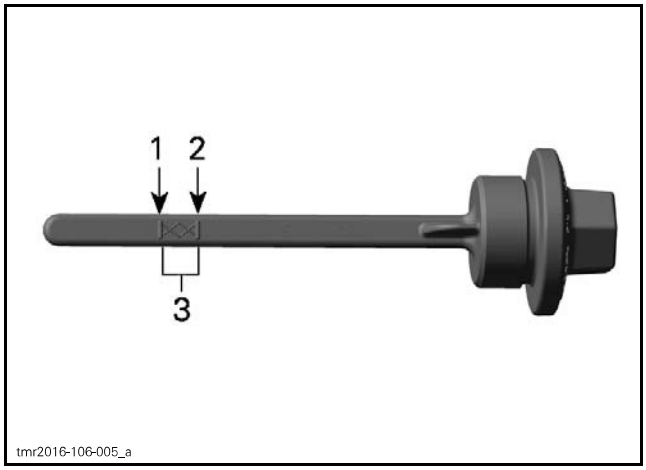

1. MIN.
2. MAX.
3. Operating range

To add oil, place a funnel into the dipstick hole.

Add a small amount of recommended oil and recheck oil level.

Repeat the above procedures until oil level reaches the dipstick's upper mark.

NOTICE **Operating the gearbox with an improper oil level may severely damage gearbox.**

NOTE: Do not overfill. Wipe off any spillage.

Properly tighten the plug.

TIGHTENING TORQUE	
Gearbox oil level plug	5 N•m ± 0.6 N•m (44 lbf•**in** ± 5 lbf•**in**)

Replacing the Gearbox Oil

Draining Procedure

Prior to change the oil, ensure vehicle is on a level surface.

Oil change should be done with a warm engine.

⚠ WARNING

The gearbox oil can be very hot.

Place a drain pan under the gearbox drain plug area.

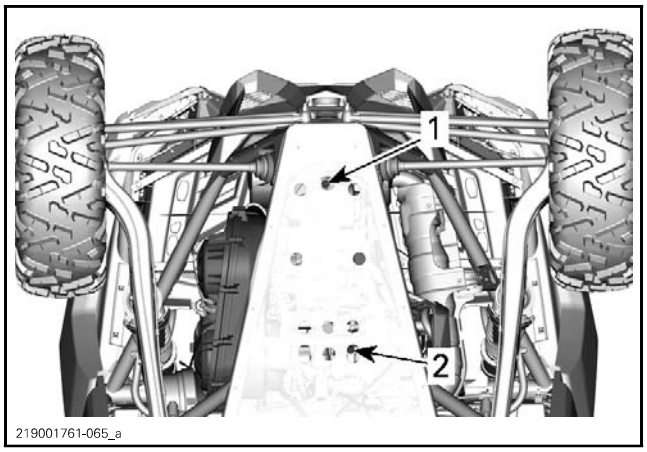

1. Gearbox drain plug
2. Engine oil drain plug

Clean drain plug area.

Remove magnetic drain plug and discard sealing ring.

Remove the gearbox oil level plug (dipstick).

NOTICE **Pay attention not to loose O-ring on plug.**

Wait a while to allow oil flow out of gearbox.

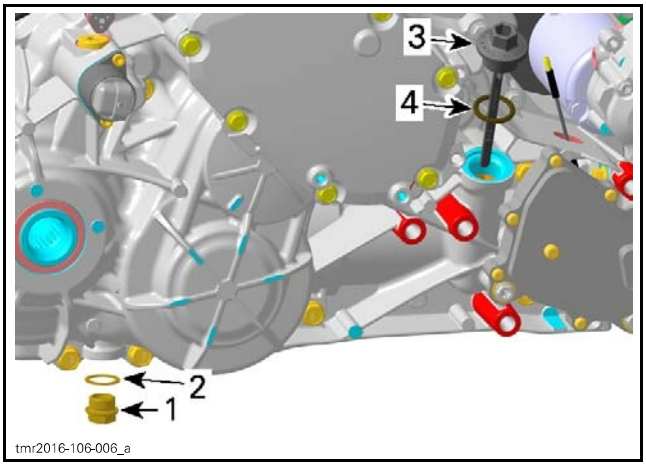

1. *Magnetic drain plug*
2. *Sealing ring (discard)*
3. *Gearbox oil level plug (dipstick)*
4. *O-ring*

Dispose gearbox oil as per your local environmental regulations.

Inspection

Oil condition gives information about the teeth condition inside the gearbox. See *TROUBLESHOOTING* in the *GEARBOX AND 4X4 COUPLING UNIT* subsection.

Clean the magnetic drain plug from metal shavings and dirt. Presence of debris gives an indication of failure inside the gearbox. Check gearbox to correct the problem.

Always install a **NEW** sealing ring.

TIGHTENING TORQUE	
Magnetic drain plug	30 N•m ± 3 N•m (22 lbf•ft ± 2 lbf•ft)

Filling Procedure

Ensure vehicle on a level surface.

Make sure that magnetic drain plug is reinstalled and tight.

Fill the gearbox through the oil dipstick hole.

RECOMMENDED GEARBOX OIL	
Type	XPS SYNTHETIC GEAR OIL (75W 140) (P/N 293 600 140) or a gearbox oil that meets the requirements of 75W 140 API GL-5 synthetic gear oil
Capacity	1.25 L (42.27 U.S. oz)

After filling check the oil level, refer to *VERIFYING THE GEARBOX OIL LEVEL* in this subsection.

NOTE: Wait a while to allow oil to flow down to the gearbox housing.

Install the gearbox oil level plug with its O-ring.

Tighten the gearbox oil level plug to specification.

TIGHTENING TORQUE	
Gearbox oil level plug	5 N•m ± 0.6 N•m (44 lbf•**in** ± 5 lbf•**in**)

Cleaning the Vehicle Speed Sensor (VSS)

Remove the VSS. Refer to *REMOVING THE VSS* in the *GEARBOX AND 4X4 COUPLING UNIT* subsection.

Remove all metal particles and oil from the VSS magnet.

NOTE: A dirty VSS will cause erratic speedometer readings.

FUEL SYSTEM

Inspecting the Throttle Body

1. Refer to *ELECTRONIC FUEL INJECTION (EFI)* subsection to access throttle body.
2. Visually inspect throttle plate and throttle body venturi for cleanliness.
3. Clean inside throttle body using a common throttle body cleaner if necessary.

Replacing the Fuel Tank Vent Breather Filter

Remove the RH lateral panel.

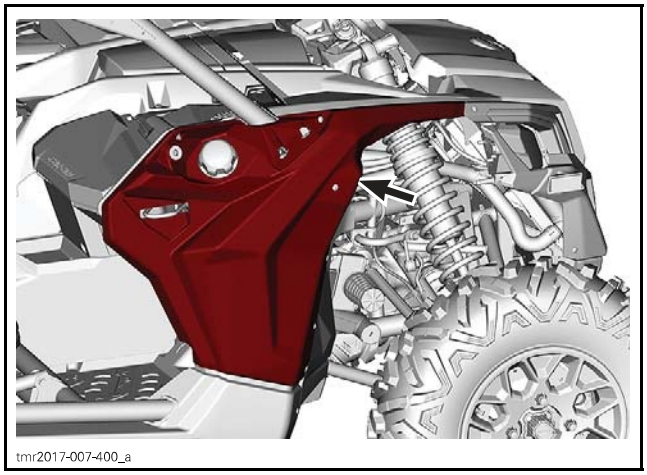

Unlock the locking tie securing the breather filter.

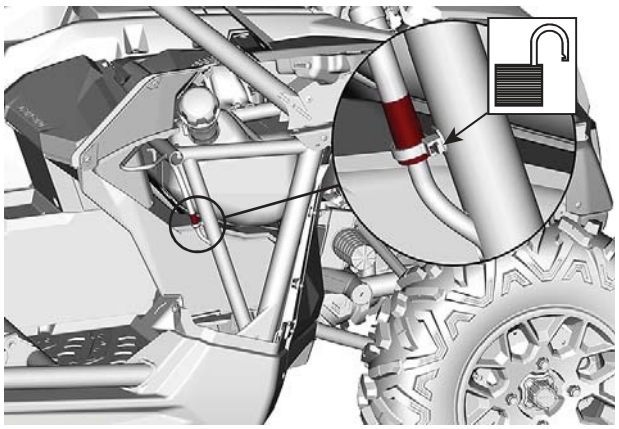
tmr2017-007-401_a

Remove the breather filter and install the new one.

NOTICE Ensure breather filter is installed with the flow arrow pointing upwards.

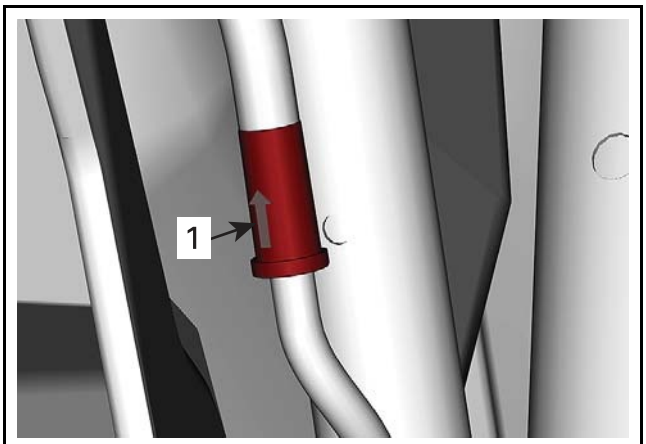

tmr2017-007-402_a

1. Flow arrow

When reinstalling the breather filter, secure it using the locking tie. Make sure the locking tie holds the body of the breather filter not the hose, as shown.

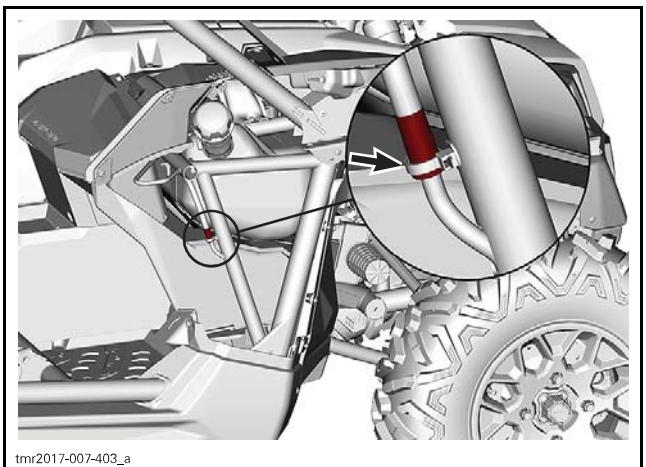
tmr2017-007-403_a

Inspecting the Fuel System

1. Visually inspect fuel tank for cracks, wear marks, signs of leakage or any other damages.
2. Visually inspect fuel system hoses for proper rooting, cracking, wear marks, signs of leakage or any other damages.
3. Carry out a *FUEL TANK LEAK TEST*, refer to *FUEL TANK AND FUEL PUMP* subsection.

⚠ WARNING

All fuel system leaks must be repaired. Damaged, worn or leaking fuel system components should be replaced to ensure fuel system tightness.

Fuel Pump Pressure Test

Refer to *FUEL TANK AND FUEL PUMP* subsection for procedure.

ELECTRICAL SYSTEM

Inspecting the Battery

Visually inspect battery casing for cracks or other damage. If casing is damaged, replace battery and thoroughly clean battery rack with water and baking soda.

Inspect battery posts condition, battery rack mounting, straps and strap attachment points.

For battery testing, refer to *CHARGING SYSTEM* subsection.

DRIVE SYSTEM

Front Differential Oil Level Verification

Clean filler plug prior to check oil level.

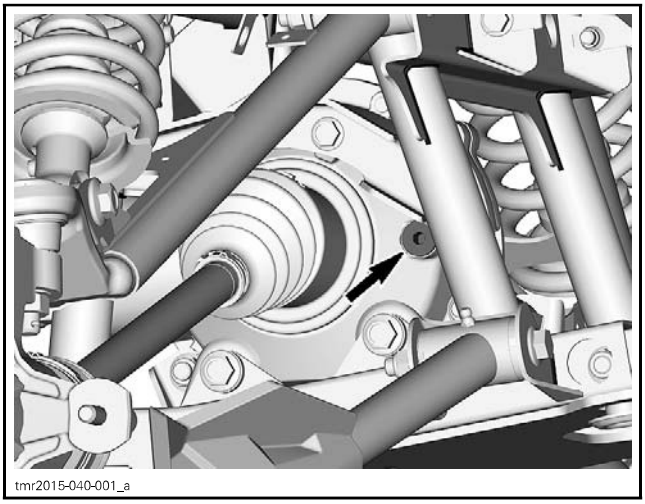
tmr2015-040-001_a

RH SIDE OF VEHICLE

With vehicle on a level surface, check oil level by removing filler plug. Oil level must reach the lower edge.

Reinstall filler plug with a **NEW** sealing ring.

TIGHTENING TORQUE	
Filler plug	22.5 N•m ± 2.5 N•m (17 lbf•ft ± 2 lbf•ft)

Front Differential Oil Replacement

Place vehicle on a level surface. Set transmission in park position.

From underneath of vehicle, clean drain plug area.

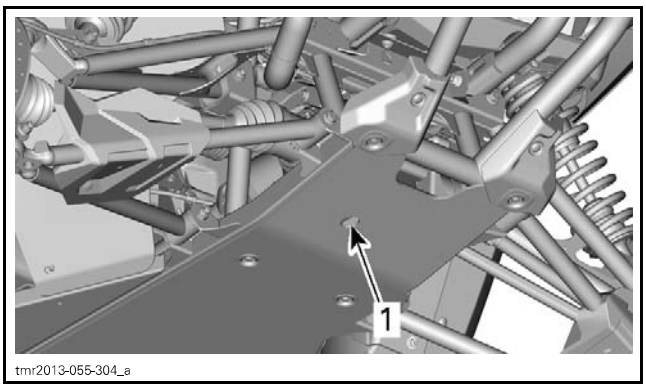

1. Drain plug access hole

Place a drain pan under the front differential.

Access the drain plug through the hole in the skid plate.

Remove drain plug.

Unscrew filler plug.

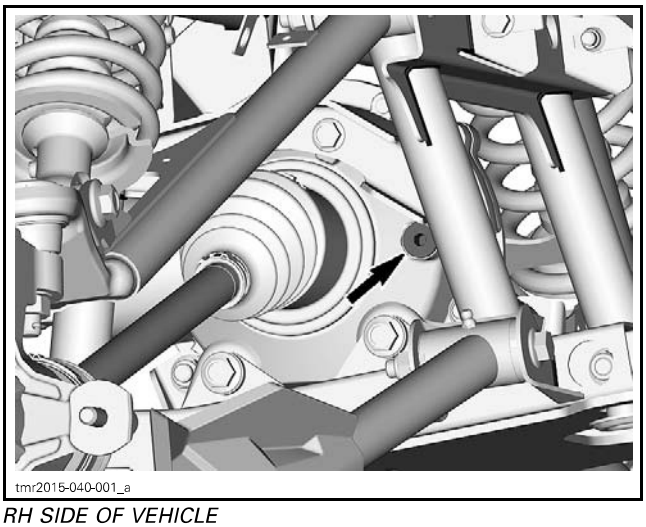

RH SIDE OF VEHICLE

Install drain plug.

TIGHTENING TORQUE	
Drain plug	7.5 N•m ± 0.5 N•m (66 lbf•**in** ± 4 lbf•**in**)

Refill front differential with recommended oil.

RECOMMENDED OIL	CAPACITY
XPS SYNTHETIC GEAR OIL (75W 90) (P/N 293 600 043) or a 75W 90 (API GL-5) gear oil	500 ml (17 U.S. oz)

Reinstall filler plug with a **NEW** sealing ring.

TIGHTENING TORQUE	
Filler plug	22.5 N•m ± 2.5 N•m (17 lbf•ft ± 2 lbf•ft)

Inspecting Drive Shaft Boots

Visually inspect drive shaft boots conditions.

Check boots for cracks, tears, leaking grease, etc.

Repair or replace damaged parts as necessary.

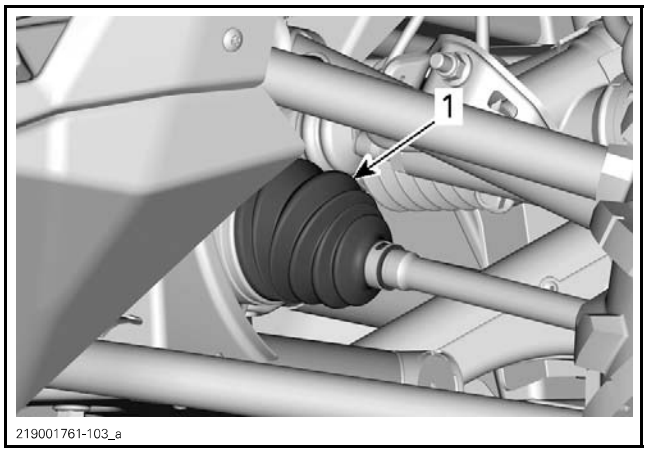

FRONT OF VEHICLE
1. Inner drive shaft boot

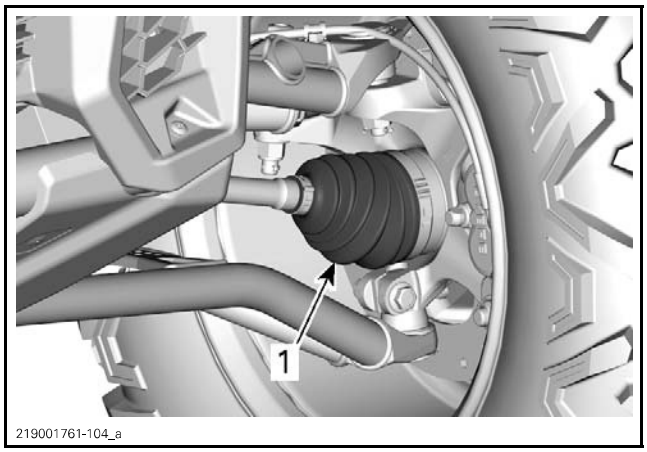

FRONT OF VEHICLE
1. Outer drive shaft boot

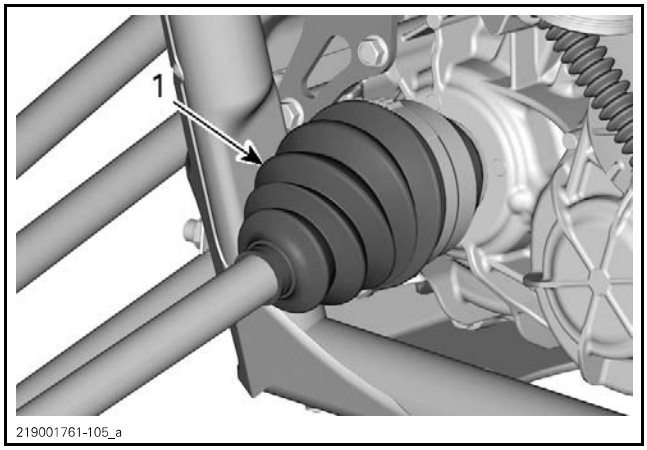

REAR OF VEHICLE (COMPONENTS REMOVED FOR CLARITY)
1. Inner drive shaft boot

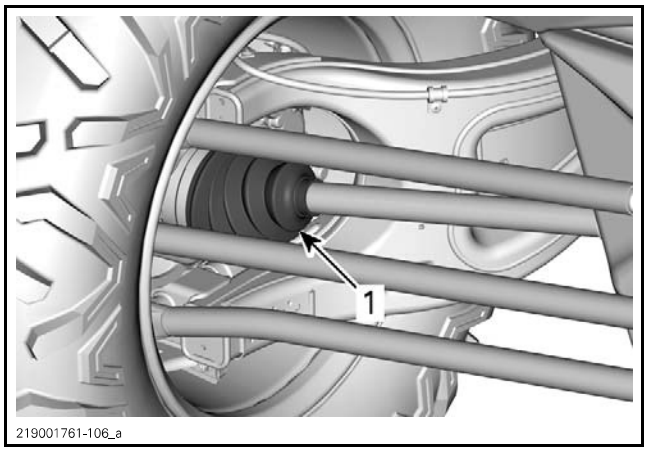

REAR OF VEHICLE
1. Outer drive shaft boot

Inspecting Drive Shaft Joint

Turn and move drive shaft to detect excessive play.

Inspecting the Propeller Shaft U-Joint Condition

Check yoke U-joints for wear, backlash or axial play, replace if necessary.

WHEELS AND TIRES

Verifying the Wheel Lug Nut Torque

Tighten wheel lug nuts to the specified torque using the illustrated sequence.

Apply LOCTITE 767 (ANTISEIZE LUBRICANT) (P/N 293 800 070) only on the taper of the wheel lug nut

TIGHTENING TORQUE	
Wheel lug nuts	120 N•m ± 10 N•m (89 lbf•ft ± 7 lbf•ft)

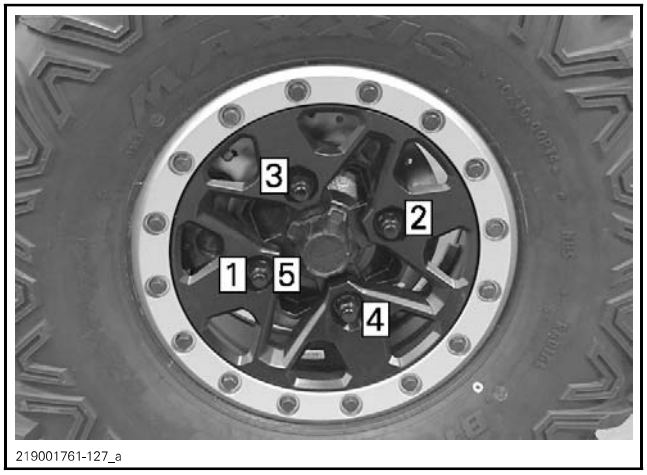

Verifying the Wheel Beadlock Torque

NOTICE **Do not use an impact wrench for installing beadlock screws. The risk of screw breaking or screw stripping is high when using an impact wrench.**

Tighten beadlock screws to the specified torque using the illustrated sequence. The complete beadlock installation procedure is available in *WHEELS AND TIRES*.

TIGHTENING TORQUE	
Beadlock screws (FINAL TORQUE)	25 N•m ± 1 N•m (18 lbf•ft ± 1 lbf•ft)

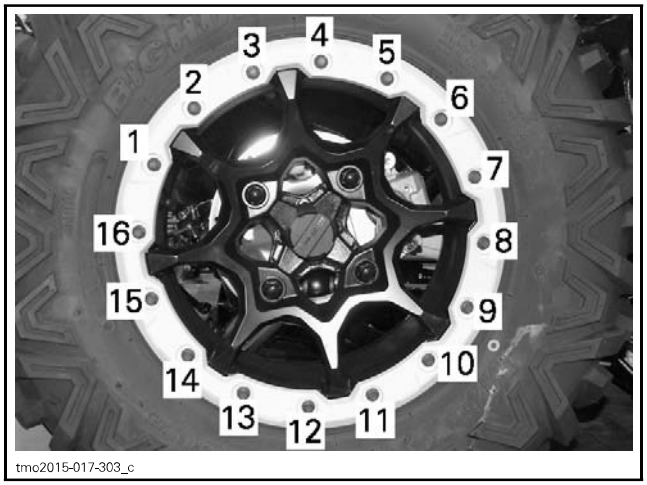

FINAL TIGHTENING SEQUENCE

STEERING SYSTEM

Inspecting Wheel Bearing

1. Safely lift and support the front of vehicle. Refer to *INTRODUCTION* subsection.
2. Hold wheel by the top and the bottom and move it. Check for any play.

3. If there is any loose, replace wheel bearing, refer to *STEERING SYSTEM* subsection.

NOTE: To properly locate play during this inspection, be sure to check other components for wear or loose (ball joints, suspension pivots, etc). If necessary repair or replace all defective parts before checking the wheel bearing condition. Be careful not to misjudge loose in the ball joint and loose in the wheel bearing.

Inspecting the Steering System

Steering Column

Turn and move steering column to detect any play.

Rack and Pinion

Check rack and pinion boots for:
– Damage
– Cracks.

Replace if necessary.

Tie-Rod End

Check tie-rod end for:
– Damage
– Pitting
– Play.

Replace if necessary.

SUSPENSION

Inspecting Shock Absorber

Check shock absorber for any leaks, replace if necessary.

Inspecting and Cleaning Shock Absorber Spherical Bearing

1. Remove shock absorber from vehicle.
2. Remove any dirt or debris prior to removing shock sleeves. Cleanliness is critical.
3. Remove shock sleeves then O-rings from shock absorber.

NOTE: There is no O-ring on the front shock lower spherical bearings.

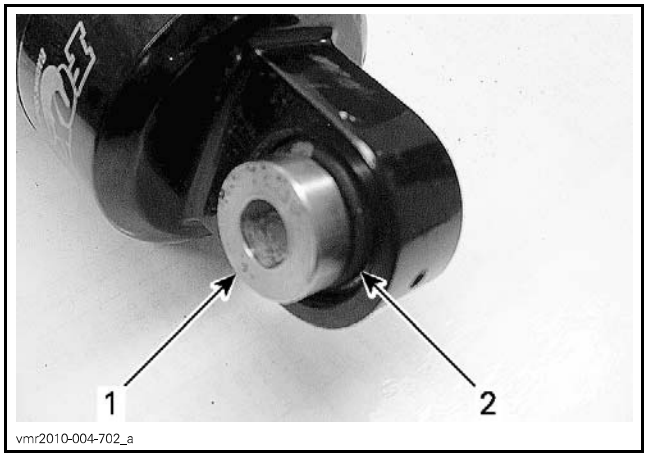

TYPICAL
1. Shock sleeve (2)
2. O-ring (2)

4. Clean spherical bearing using a shop rag to remove any dirt and debris.
5. Inspect all components for wear and damage. Replace if needed.
6. Lubricate spherical bearing as illustrated.

SPHERICAL BEARING LUBRICATION
SUSPENSION GREASE (P/N 293 550 033)

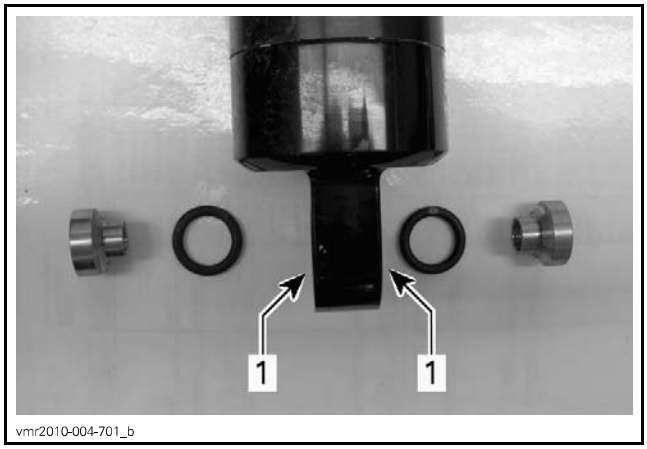

TYPICAL
1. Apply small amount of grease here

7. Install O-rings then shock sleeves.
8. Install shock absorber.

Replacing Shock Absorber Spherical Bearing

Remove shock sleeves and O-rings refer to *INSPECTING AND CLEANING SHOCK ABSORBER SPHERICAL BEARING* in this section. Discard O-rings.

NOTE: There is no O-ring on the front shock lower spherical bearings.

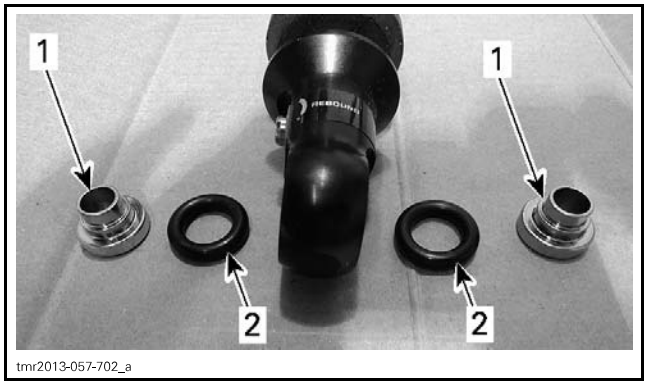

TYPICAL
1. *Sleeve - remove*
2. *O-ring - discard*

Remove and discard both spring clips.

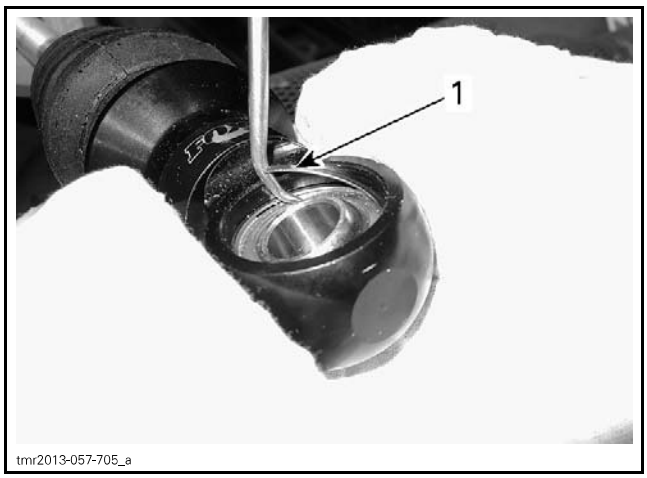

TYPICAL
1. *Spring clip*

Use a proper sized socket to press bearing out of location on a press or a vise.

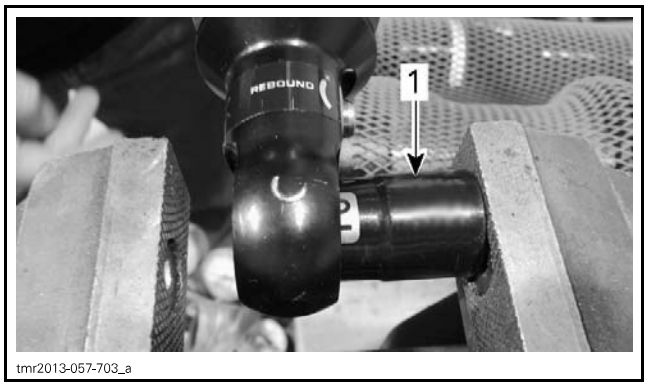

TYPICAL
1. *Proper sized socket*

Installation is the reverse of the removal procedure. However, pay attention to the following:
– Install **NEW** spring clips
– Install **NEW** O-rings
– Apply small amount of grease on new bearing.

SPHERICAL BEARING LUBRICATION
SUSPENSION GREASE (P/N 293 550 033)

Lubricating Front Suspension Arm

Lubricate suspension arm at grease fittings.

SUSPENSION ARM LUBRICATION
SUSPENSION GREASE (P/N 293 550 033)

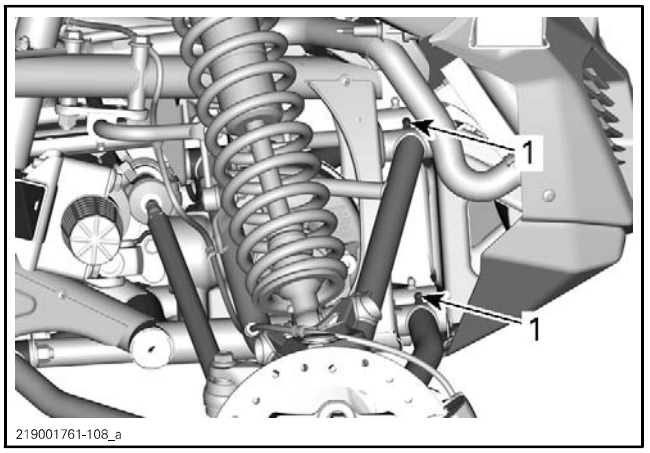

TYPICAL - FRONT SUSPENSION
1. *Grease fittings*

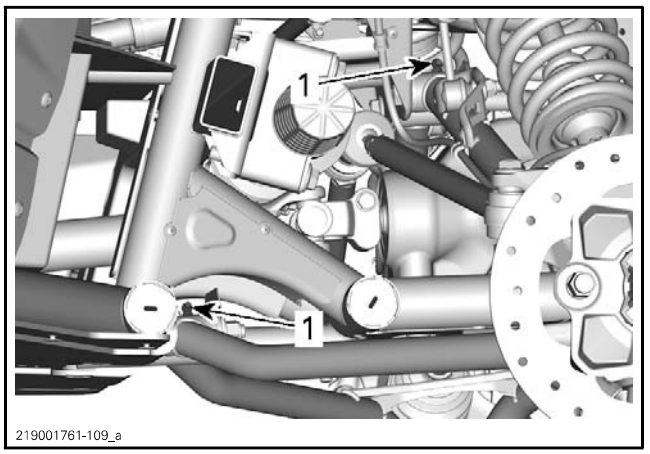

TYPICAL - FRONT SUSPENSION
1. *Grease fittings*

Inspecting Front Suspension Arm

Check suspension arm for:
– Cracks
– Pitting
– Bending
– Distortion.

Check suspension arm for abnormal play:
– Side to side
– Up and down.

If any play is detected, inspect:
– Bushings

– Inner sleeves
– Wear plates.

Check ball joint for:
– Damage
– Pitting
– Play.

Check ball joint bellows for:
– Damage
– Cracks.

BRAKES

Verifying Brake Fluid Reservoir Level

Remove the front service cover.

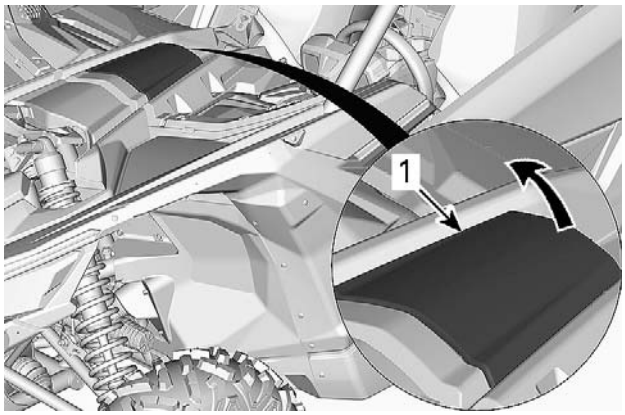

1. Front service cover

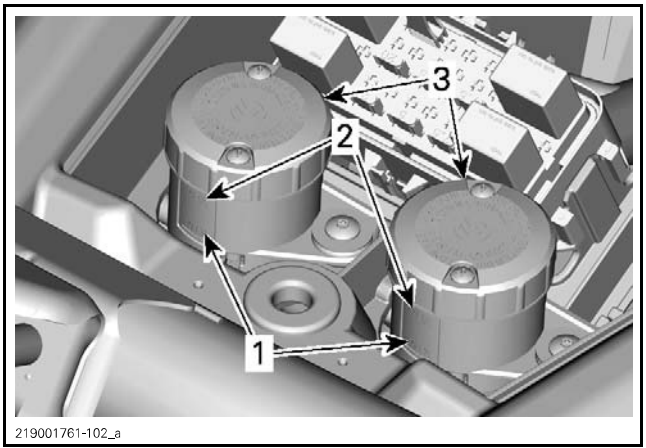

1. MIN
2. MAX

With vehicle on a level surface, check brake fluid in reservoir for proper level. Brake fluid level should be between MIN. and MAX. marks.

NOTE: A low level may indicate leaks or worn brake pads.

Adding Brake Fluid

Clean filler cap before removing.

Add fluid as required. **Do not overfill.**

NOTE: Ensure filler cap diaphragm is pushed inside the cap before closing the brake fluid reservoir.

Inspecting and Cleaning the Brake System

NOTICE **Do not clean brake components in petroleum based solvent. Use brake system cleaner only. Soiled brake pads must be replaced with new ones.**

Brake Pads

Measure brake pad lining thickness.

BRAKE PAD MINIMUM THICKNESS
0.5 mm (.02 in)

The brake pad grooves are wear indicators.

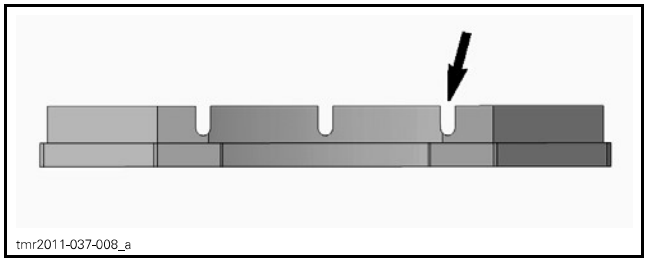

BRAKE PAD GROOVE

NOTICE **Brake pads must always be replaced in pairs.**

Brake Caliper

1. Remove calipers then check the following components:
   – Check brake pad pins
   – Check caliper boots for cracks
   – Check caliper movement on its support
   – Check pistons movement
   – Check pistons for scratches, rust or other damages.
2. Clean the following components using XPS BRAKES AND PARTS CLEANER (USA) (P/N 219 701 705) or XPS BRAKES AND PARTS CLEANER (P/N 219 701 776):
   – Brake pads
   – Caliper support and slider
   – Caliper pistons, spring and pins.

NOTE: Do not remove pistons from caliper for cleaning them.

3. Lubricate caliper sliders using an appropriate *BRAKE CALIPER SYNTHETIC GREASE*.

Do not apply grease to brake caliper pad pins.

Brake Disc

1. Check brake disc as follows:
   – Check disc thickness
   – Check disc surfaces
   – Check disc warpage.

NOTE: Refer to *INSPECTING THE BRAKE DISC* in *BRAKES* subsection for details.

2. Clean brake disc using XPS BRAKES AND PARTS CLEANER (USA) (P/N 219 701 705) or XPS BRAKES AND PARTS CLEANER (P/N 219 701 776).

Master Cylinder

1. Check master cylinder as follows:
   – Check cleanliness of master cylinder rod and boot.
   – Check master cylinder boot for cracks or damage.
2. If required, clean then lubricate master cylinder rod and boot using COSMO RUBBER GREASE (P/N 715 900 399).

Brake Pedal

1. Check brake pedal as follows:
   – Brake pedal pivot movement
   – Brake pedal pivot cleanliness.
2. If required, clean then lubricate brake pedal pivot using XPS SYNTHETIC GREASE (P/N 293 550 010).

Brake Hoses

Check hoses for leaks, crushed, deformations, cracking or scrapes.

Any deformation can restrict the proper flow of fluid and cause braking problems.

Wheel scraper

Check if the wear indicator still visible on the wheel scraper.

Replacing Brake Fluid

Draining Brake Fluid

1. Clean and remove reservoir cover with its diaphragm.
2. Connect a clear hose into caliper bleeder.

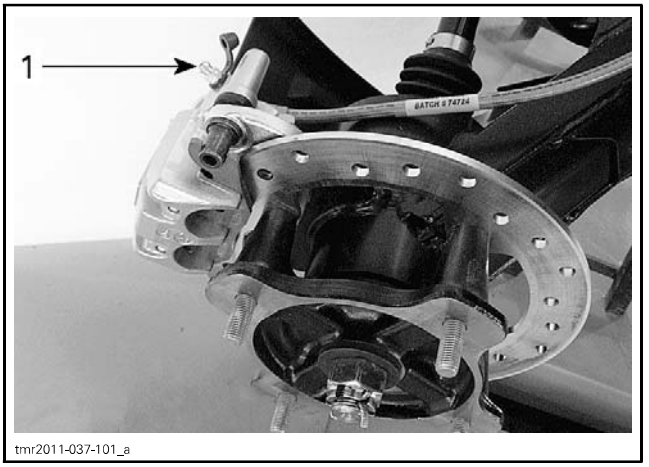

1. Caliper bleeder

3. Loosen caliper bleeder.
4. Pump brake pedal until no more fluid flows out.
5. Repeat draining procedure for the other caliper bleeders.

Filling the Brake Fluid

Add recommended brake fluid to MAX. mark. Do not overfill.

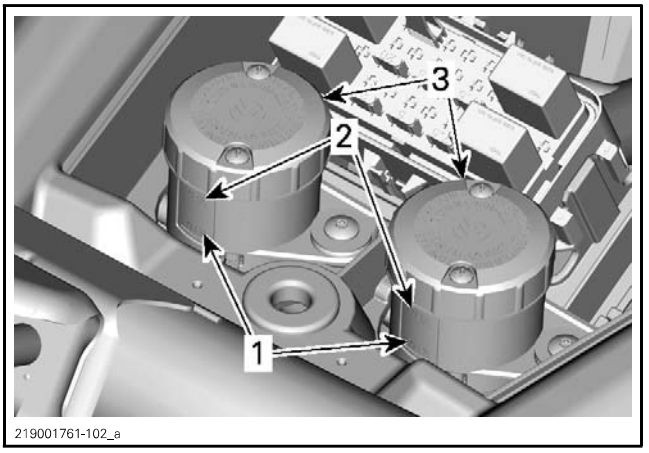

1. MIN
2. MAX

RECOMMENDED BRAKE FLUID
DOT 4 BRAKE FLUID GTLMA DOT4 (P/N 293 600 131)

⚠ WARNING

– Use only DOT 4 brake fluid from a sealed container.
– Do not use brake fluid from an old or already opened container.

Bleeding Brake System (Procedure Using a Vacuum Pump)

NOTE: Brake fluid reservoir must be kept full to prevent air from being pumped into the system.

1. On each caliper, unscrew bleeder until brake fluid comes out then close it.
2. Install the vacuum pump onto caliper bleeder.

REQUIRED TOOL	
VACUUM/PRESSURE PUMP (P/N 529 021 800)	

3. Place pump to vacuum position.
4. Pump vacuum pump a few times.
5. Loosen bleeder.
6. Continue to pump until no more air bubbles appear in clear hose.
7. Close then tighten bleeder.

TIGHTENING TORQUE	
Bleeder	5.5 N•m ± 1.5 N•m (49 lbf•**in** ± 13 lbf•**in**)

8. Add recommended brake fluid to MAX. mark. Do not overfill.
9. Perform bleeding procedure for the other caliper bleeders.
10. Check brake pedal operation:
    – If brake pedal feels spongy, bleed system again then carry out the *BRAKE SYSTEM PRESSURE VALIDATION* as detailed in *BRAKES* subsection.

Bleeding Brake System (Manual Bleeding Procedure)

NOTE: Brake fluid reservoir must be kept full to prevent air from being pumped into the system.

1. Connect a clear hose onto caliper bleeder.
2. Pump up system pressure with brake pedal until pedal resistance is felt.
3. Depress and hold brake pedal.
4. Open bleeder and then close it.
5. Release brake pedal slowly.

NOTE: Do not release brake pedal until bleeder has been closed.

6. Repeat procedure until fluid flows out without any air bubbles.
7. Tighten bleeder.

TIGHTENING TORQUE	
Bleeder	5.5 N•m ± 1.5 N•m (49 lbf•**in** ± 13 lbf•**in**)

8. Perform bleeding procedure for the other caliper bleeders.
9. Check brake pedal operation:
    – If brake pedal feels spongy, bleed system again then carry out the *BRAKE SYSTEM PRESSURE VALIDATION* as detailed in *BRAKES* subsection.

Midwest Manuals
Green Manuals
Paperless Manuals
For a Better Tomorrow
If you bought this manual from any other seller please leave them NEGATIVE feedback and notify me at bestshopmanuals@gmail.com

STORAGE PROCEDURE

SERVICE PRODUCTS

Description	Part Number	Page
BRP HEAVY DUTY CLEANER	293 110 001	2
XPS ALL PURPOSE CLEANER	219 701 709	2
XPS FUEL STABILIZER	413 408 601	1
XPS LUBE	293 600 016	2
XPS STORAGE OIL (EXCEPT U.S. COUNTRY)	413 711 600	1
XPS STORAGE OIL (U.S. COUNTRY ONLY)	413 711 900	1

GENERAL

If the SSV is not used or is to be stored for an extended period of time, more than 4 months, be sure to perform the storage procedures described below.

Where applicable, refer to the appropriate subsections in this manual for the required tasks outlined in these procedures.

PROCEDURES

To facilitate the inspection and ensure adequate lubrication of components, it is recommended to clean the entire vehicle. Refer to *VEHICLE CLEANING* in this subsection.

FUEL SYSTEM

Fuel System Protection

With the new fuel additives, it is critical to use the XPS FUEL STABILIZER (P/N 413 408 601) or an equivalent to prevent fuel deterioration and fuel system gumming. Follow the manufacturer's instructions for proper use.

NOTICE **Fuel stabilizer should be added prior to engine lubrication to ensure fuel system components protection against varnish deposits.**

Pour fuel stabilizer in fuel tank. Fill up fuel tank.

ENGINE

Engine Internal Lubrication

Engine internal parts must be lubricated to protect them from rust formation during the storage period.

Proceed as follows:

1. Remove spark plugs, refer to *IGNITION COILS AND SPARK PLUGS* subsection.
2. Spray storage oil into each cylinder.

NOTE: Use the storage oil as per country availability.

STORAGE OIL
XPS STORAGE OIL (EXCEPT U.S. COUNTRY) (P/N 413 711 600)
XPS STORAGE OIL (U.S. COUNTRY ONLY) (P/N 413 711 900)

3. Press start button, 1 or 2 seconds maximum, to lubricate cylinders.
4. Reinstall the spark plugs.

NOTE: Do not run engine during storage period.

Exhaust System

Block muffler outlet with a rag.

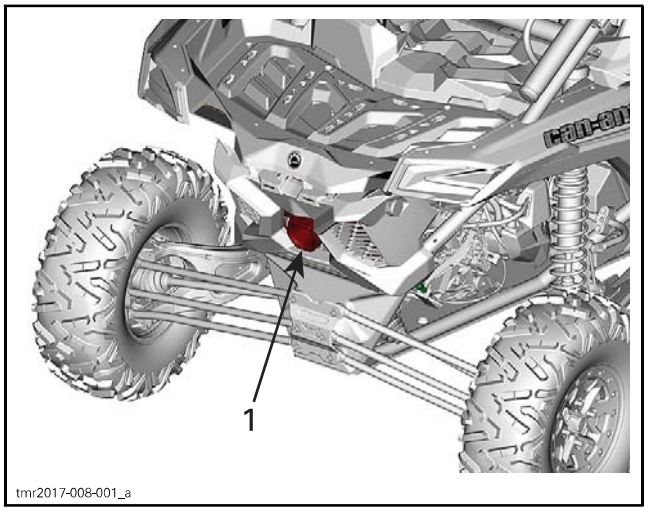

1. Muffler opening

CVT Protection

Remove drive belt. Refer to *CVT* subsection.

Inspect and clean pulleys.

Protect pulleys by spraying XPS LUBE (P/N 293 600 016) on pulley faces.

NOTE: Do not reinstall drive belt.

Close CVT cover.

Block all CVT outlets with rags . Refer to *CVT* subsection.

ELECTRICAL SYSTEM

Removing the Battery

Remove the battery.

Charge and store battery as per battery manufacturers instructions.

CHASSIS

Lubricating the Suspension

Lubricate the front suspension arms and stabilizer bars. Refer to *PERIODIC MAINTENANCE PROCEDURES* subsection.

Tire Pressure

Inflate tires to the recommended pressure.

Cleaning the Vehicle

Wash and dry the vehicle.

NOTICE Never use a high pressure washer to clean the vehicle. USE LOW PRESSURE ONLY (like a garden hose). The high pressure can cause electrical or mechanical damages.

Remove any dirt or rust.

To clean the vinyl or plastic parts, use only flannel clothes with XPS ALL PURPOSE CLEANER (P/N 219 701 709).

NOTICE It is necessary to use flannel cloths on plastic parts to avoid damaging surfaces. Never clean plastic parts with strong detergent, degreasing agent, paint thinner, acetone, products containing chlorine, etc.

To clean the entire vehicle, including metallic parts use BRP HEAVY DUTY CLEANER (P/N 293 110 001).

Inspect the vehicle and repair any damage. Touch up all metal spots where paint has been scratched off. Spray all metal parts with XPS LUBE (P/N 293 600 016).

Vehicle Protection

Protect the vehicle with a cover to prevent dust accumulation during storage.

NOTICE The vehicle has to be stored in a cool and dry place and covered with an opaque tarpaulin. This will prevent sun rays and grime from affecting plastic components and vehicle finish.

PRESEASON PREPARATION

Prior to using vehicle, proper vehicle preparation is required after a storage period.

If any worn, broken or damaged parts are found, replace them.

Remove rags that were installed for storage: CVT outlet hoses and mufflers.

Clean drive and driven pulleys to remove storage protective lubricant, then reinstall drive belt. Refer to *CONTINUOUSLY VARIABLE TRANSMISSION (CVT)* subsection.

Disconnect air inlet hose from the air filter housing and inspect for animal nests etc. Reinstall hose.

Drain fuel tank and fill with fresh fuel if a fuel stabilizer was not used for the storage.

Reinstall battery. Refer to *CHARGING SYSTEM* subsection.

Using the maintenance chart, perform the items titled:

IF OPERATED IN TRAIL RIDING CONDITIONS	IF OPERATED IN SEVERE RIDING CONDITIONS
EVERY YEAR OR 3 000 km (2,000 mi) OR 100 HOURS (whichever comes first)	EVERY YEAR OR 1 500 km (1,000 mi) OR 50 HOURS (whichever comes first)

NOTE: If the next maintenance service is due, also perform the related items as per the maintenance chart.

Test drive vehicle to confirm proper operation.

SPECIAL PROCEDURES

SERVICE PRODUCTS

Description	Part Number	Page
XPS LUBE	293 600 016	2

GENERAL

NOTE: Component failures resulting from these events are not warrantable.

Refer to the appropriate subsections in this manual for the required tasks outlined in these procedures.

ROLLED OVER VEHICLE

Inspect components of the following systems: suspension, drivetrain and steering.

1. In the event the vehicle was rolled over, check the following.
   - 1.1 Inspect components of the following systems: suspension, drivetrain and steering.
   - 1.2 Inspect body and chassis for damage (welded joints, bent or cracked parts).
   - 1.3 Pay particular attention to the radiator, cage, doors, seat belts and their mechanisms.

     ⚠ WARNING

     Do not use vehicle if any of the safety devices are damaged or inoperative.

   - 1.4 Check all fluids level before restarting engine (engine oil, coolant, differential oil, gearbox oil, and brake fluid).

     NOTICE **Check for oil accumulation in the air intake system. Check air filter.**

   - 1.5 Inspect engine and exhaust system for any signs of liquid spillage. If liquids are present, use a cleaner and wipe the affected surfaces.
2. After restarting engine, check multifunction gauge if any malfunction is detected.
3. Troubleshoot and repair as required before using vehicle.

SUBMERGED VEHICLE

In the event the vehicle was submerged, proceed with the following.

NOTICE **A submerged vehicle may cause several damages (short and long term) if not serviced adequately or soon enough. If water was drawn into the engine, the engine is most likely in a hydraulic lock. Do not crank or start engine or severe damage will occur. Inspect engine for water intrusion and hydraulic lock damage (water in the oil and cylinders, bent piston rod...). Carry out all items in this topic before cranking or attempting to start engine.**

1. Drain the entire air intake system. Inspect the throttle body. Remove parts as required.
2. On turbo equipped vehicles, also check for water intrusion through both sides of the turbo (impeller and compressor sides). Clean and dry as required.
3. Inspect the boost control solenoid valve (turbo engines). Clean valve, test engine and turbo system for proper operation. Replace valve if required.
4. Replace the air filter.
5. Drain, inspect and clean the CVT.
6. Empty mufflers (removal required).
7. Empty resonator (removal required).
8. Unplug ECM, multifunction gauge, DPS, and open fuse boxes. Check for presence of water. Dry as necessary.
9. Inspect all lights for water intrusion. Dry as required.
10. Replace the engine oil (without starting the engine).
11. Remove spark plugs. Crank engine in drowned mode to expel any water.

⚠ CAUTION **Keep away from spark plug holes to avoid being splashed when cranking engine.**

12. Add a small quantity of engine oil in cylinders (approximately 2 teaspoonfuls).
13. Install spark plugs (replace if required).
14. Look for water in fuel tank, if in doubt, flush fuel tank and refill with new gas.

15. Look for water in brake system. Replace brake fluid as required.
16. Before starting engine, use the BRP Diagnostic Software (BUDS2) and check vehicle for fault codes.
17. Start the engine and allow it to run at idle speed until the engine reaches its operating temperature.
18. Stop the engine.
19. Change engine oil and filter.

NOTE: Change oil as many times as necessary, until there is no whitish appearance in engine oil.

20. Check gearbox oil. Replace oil if contaminated with water.
21. Replace oil of front differential.
22. Lubricate front suspension arms and rear stabilizer bar. Refer to *PERIODIC MAINTENANCE PROCEDURES* subsection.
23. Spray all metal parts with XPS LUBE (P/N 293 600 016).
24. Test drive to confirm proper operation.

Midwest Manuals
Green-Manuals
Paperless Manuals
For a Better Tomorrow
If you bought this manual from any other seller please leave them NEGATIVE feedback and notify me at bestshopmanuals@gmail.com

ENGINE REMOVAL AND INSTALLATION

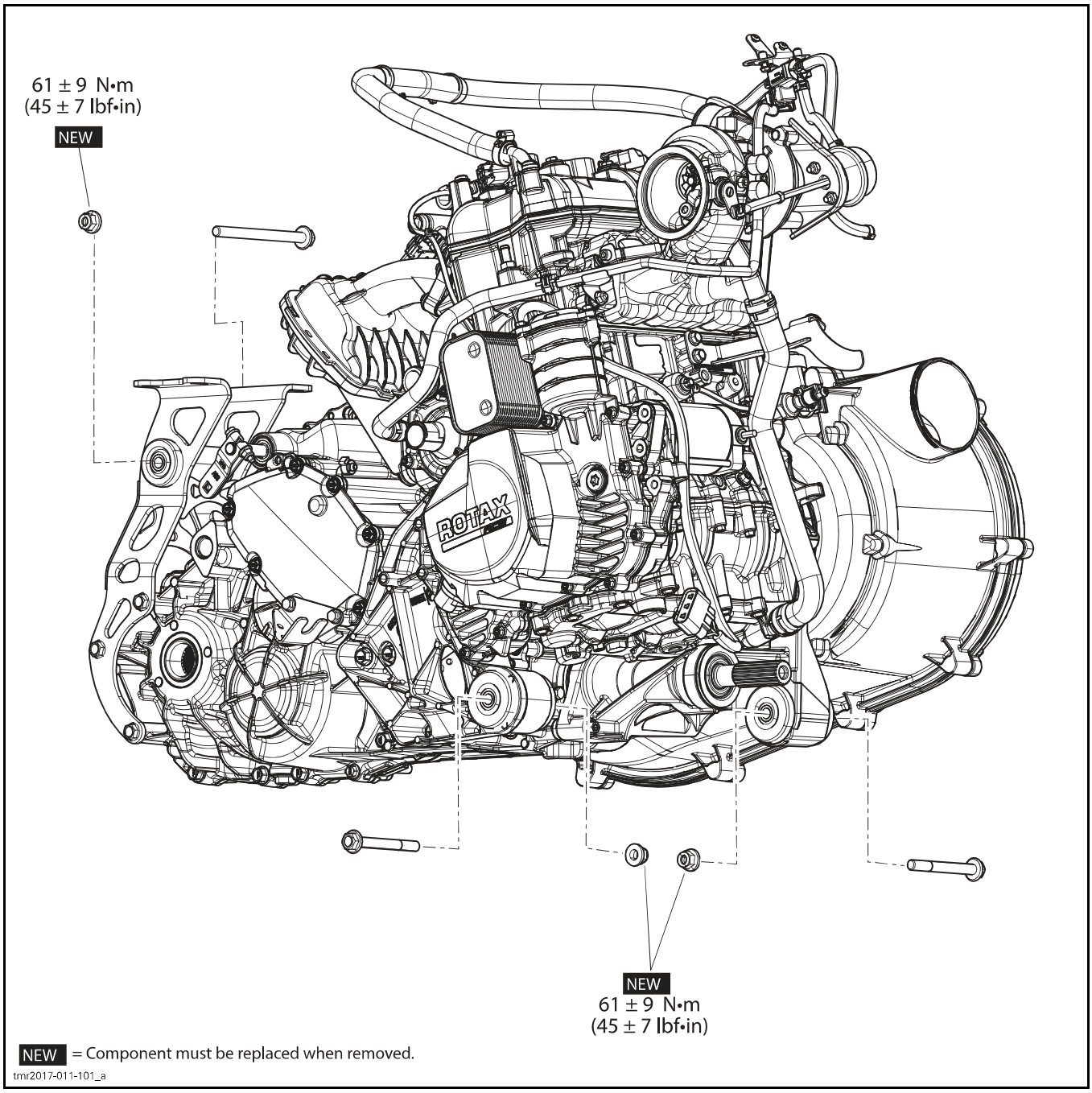

NEW = Component must be replaced when removed.

tmr2017-011-101_a

PROCEDURES

REMOVING THE ENGINE

Preparing the Vehicle and Engine

1. Place vehicle on a workstation that will have access to an engine-lifting hoist.
2. Safely lift and support the vehicle. Refer to *INTRODUCTION* subsection.
3. Drain the engine coolant. Refer to *REPLACING THE ENGINE COOLANT* in the *PERIODIC MAINTENANCE PROCEDURES* subsection.
4. With BUDS2, Go to **Function** and execute a fuel pressure relief.
5. Refer to the appropriate subsection and remove:
   - Seats
   - Rear body module
   - Intercooler shroud
   - Rear drive shafts
   - Rear shock absorbers
   - Muffler and its support
   - Exhaust heat shield
   - CVT air inlet and outlet hoses
   - Air intake silencer
   - shifter cable from gearbox
   - Hose cover on the RH side of engine
   - Coolant hoses from water pump. Cut all locking ties.
6. Remove the 2 coolant hoses shown from expansion tank.

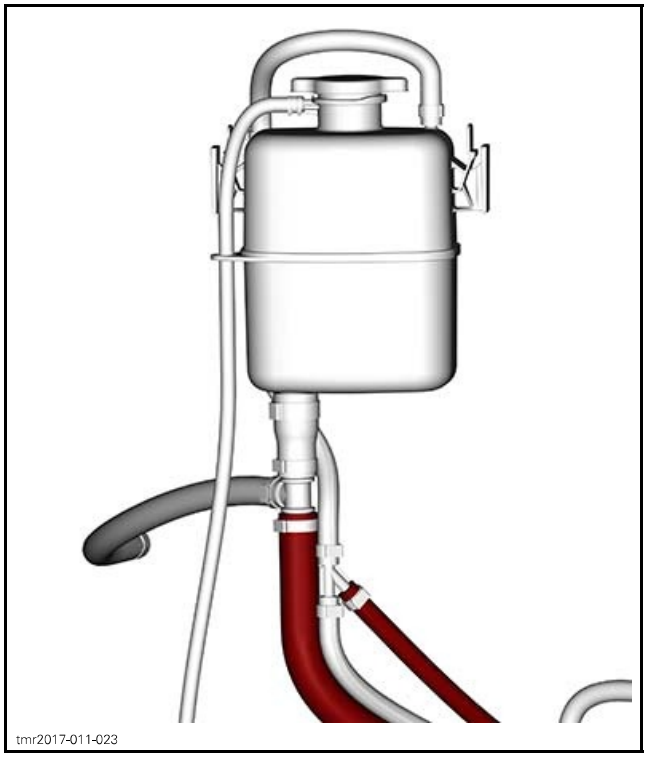
tmr2017-011-023

7. Drain engine oil. Refer to *ENGINE OIL CHANGE* in the *PERIODIC MAINTENANCE PROCEDURES* subsection.

NOTE: Drain engine oil only if engine overhaul is necessary.

8. Disconnect battery and ECU harness.

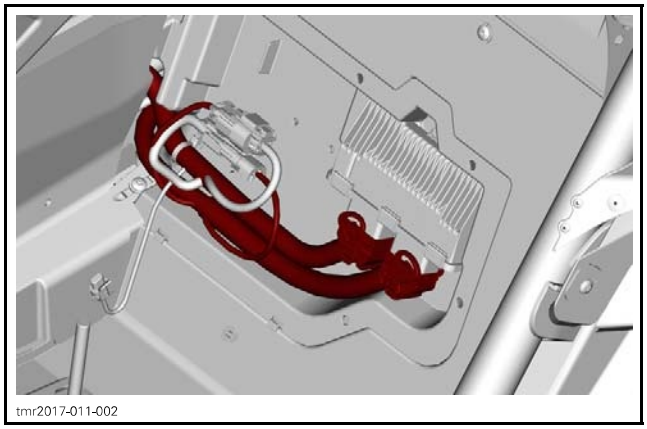
tmr2017-011-002

NOTICE Always unplug battery cables exactly in the specified order, the BLACK (-) cable first.

9. Disconnect:
   - Starter cable
   - Fuel hose from fuel rail
   - Gearbox vent hose
   - Engine ground wire
   - Voltage regulator.

10. Remove seat belt tie bar. Drill rivets to remove.

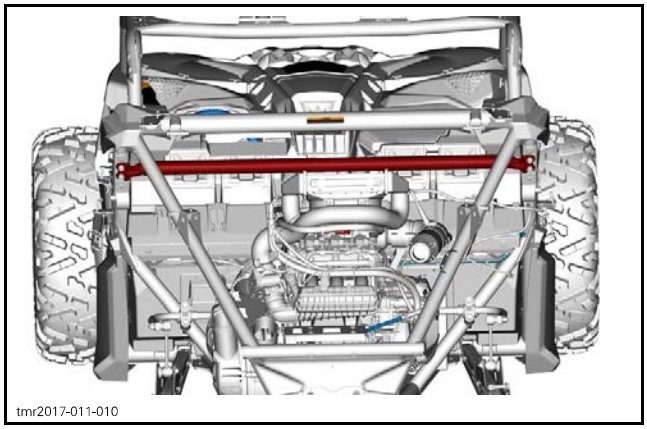
tmr2017-011-010

Lifting the Engine

1. Install 2 straps as shown.

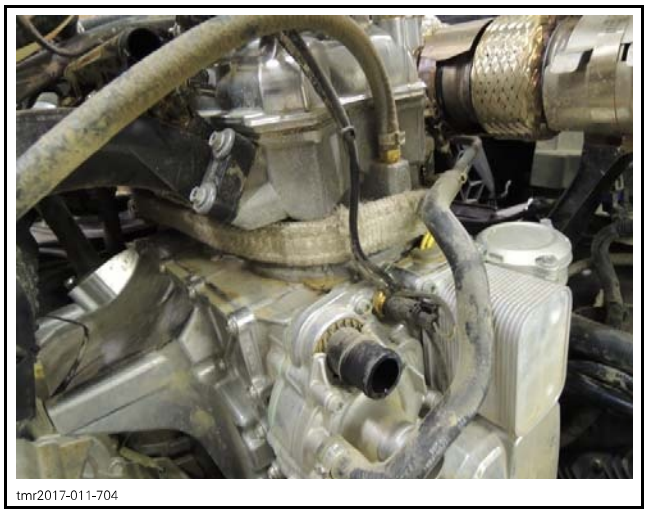
tmr2017-011-704


tmr2017-011-703

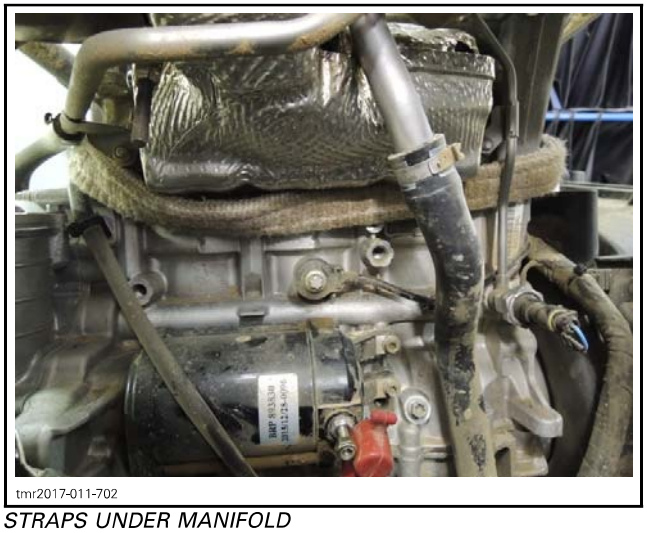
tmr2017-011-702

STRAPS UNDER MANIFOLD

2. Remove the front engine support bolts.

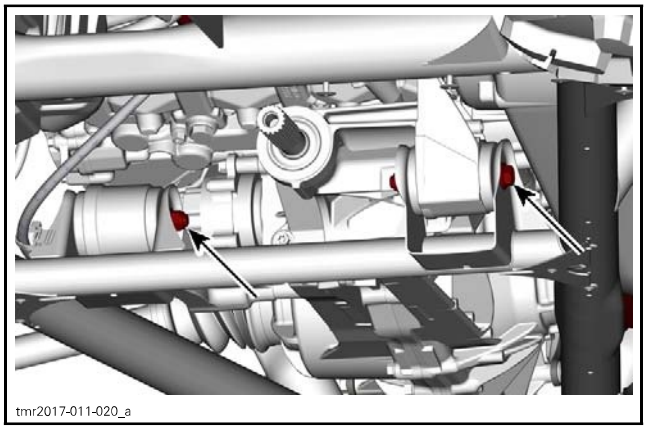
tmr2017-011-020_a

3. Lift engine with the rear support bolt still in place, to tilt the engine and gearbox assembly.

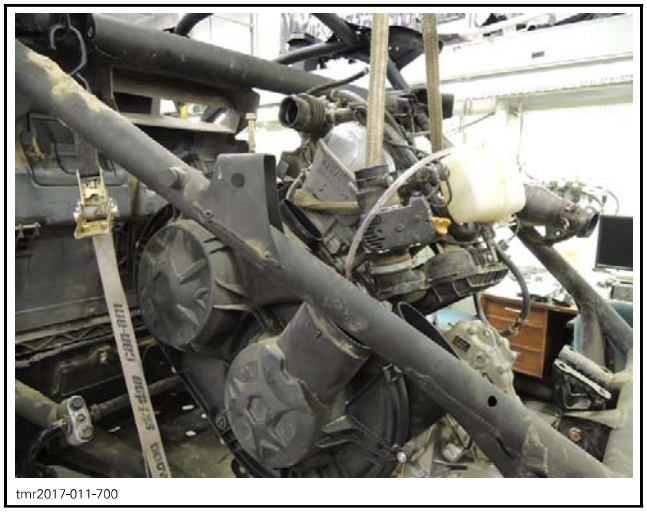
tmr2017-011-700

NOTE: Make sure engine does not tilt side-to-side, readjust straps as necessary.

4. Remove rear support bolt and lift engine from vehicle.

INSTALLING THE ENGINE

The installation is the reverse of the removal procedure. However, pay attention to the following.

Prior to install engine, inspect condition of engine mounts.

TIGHTENING TORQUE	
Engine mount screw (M10)	61 N•m ± 9 N•m (45 lbf•ft ± 7 lbf•ft)

NOTE: Do not install plastic parts and seats prior to *FINAL ASSEMBLY*.

Final Assembly Procedure

1. Fill engine with the recommended oil and quantity. Refer to *CHANGING THE ENGINE OIL* in the *PERIODIC MAINTENANCE PROCEDURES* subsection.
2. Fill and bleed cooling system. Refer to *REPLACING THE ENGINE COOLANT* in the *PERIODIC MAINTENANCE PROCEDURES* subsection.
3. Check for any leaks.
4. Reinstall all remaining parts.
5. Test drive vehicle to confirm proper operation.

ENGINE MOUNTS

NOTE: Use the same procedure for the front and rear engine mounts.

Removing the Engine Mount

Insert a punch into engine mount bushing and push the opposite engine mount out.

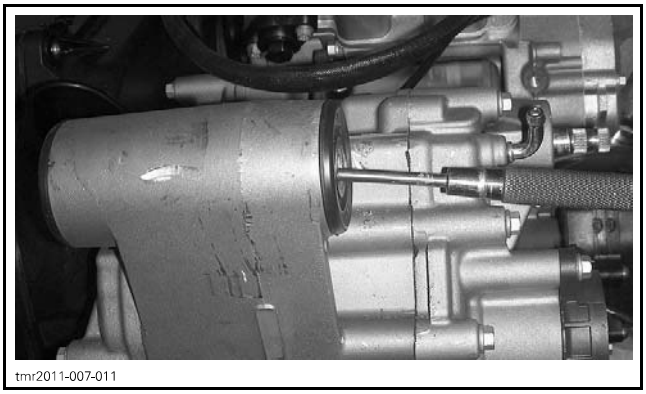

tmr2011-007-011

TYPICAL

Installing the Engine Mount

The installation is the reverse of the removal procedure.

AIR INTAKE SYSTEM

AIR FILTER HOUSING

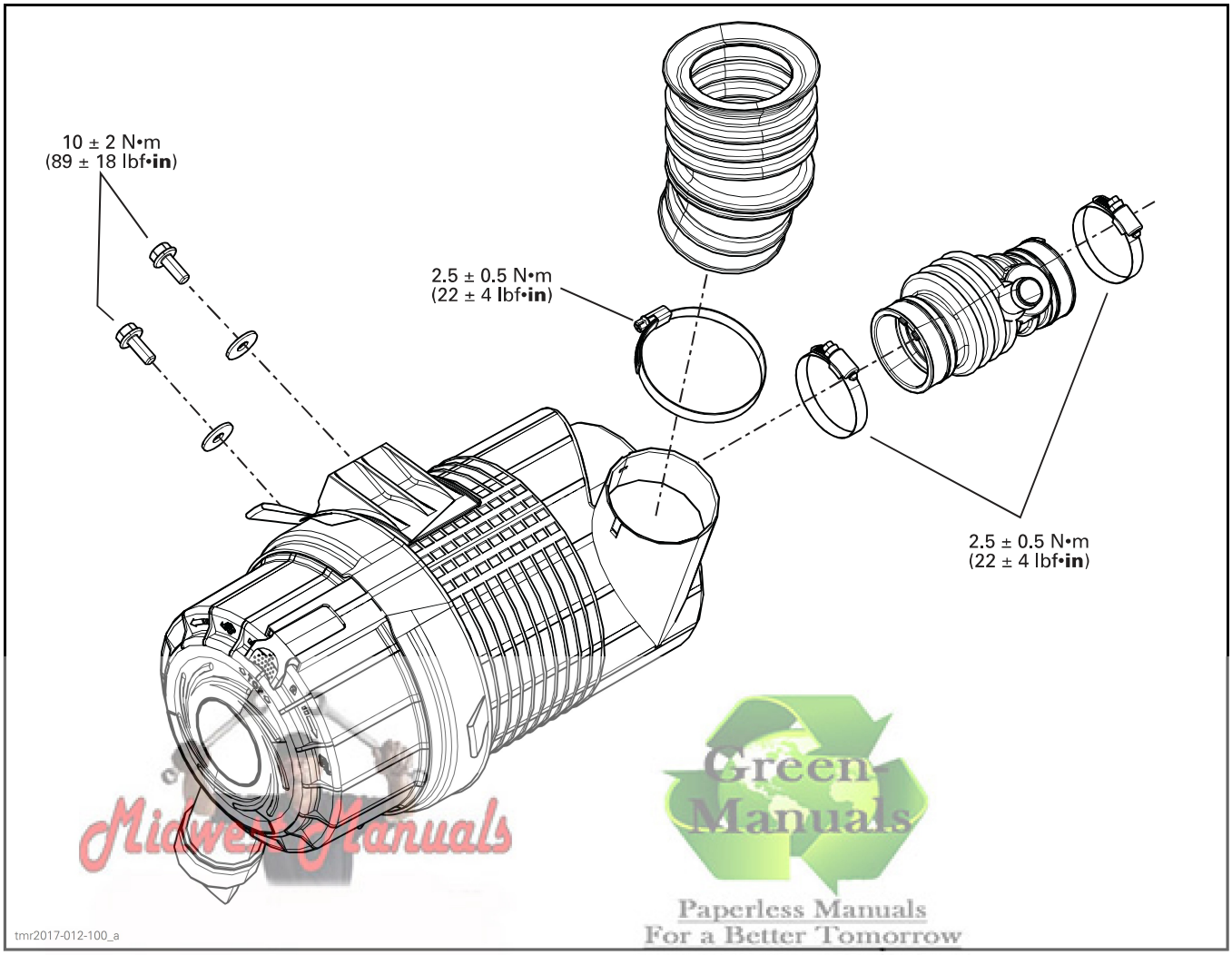

Midwest Manuals
Green Manuals
Paperless Manuals
For a Better Tomorrow
If you bought this manual from any other seller please leave them NEGATIVE feedback and notify me at bestshopmanuals@gmail.com

GENERAL

NOTICE Never modify the air intake system. Otherwise, engine performance degradation or damage can occur. The engine is calibrated to operate specifically with these components.

PROCEDURES

AIR FILTER

For air filter servicing, refer to *PERIODIC MAINTENANCE PROCEDURES* subsection.

AIR FILTER HOUSING

Removing the Air Filter Housing

Move the driver's seat forwards.

Remove air filter housing screws and washers.

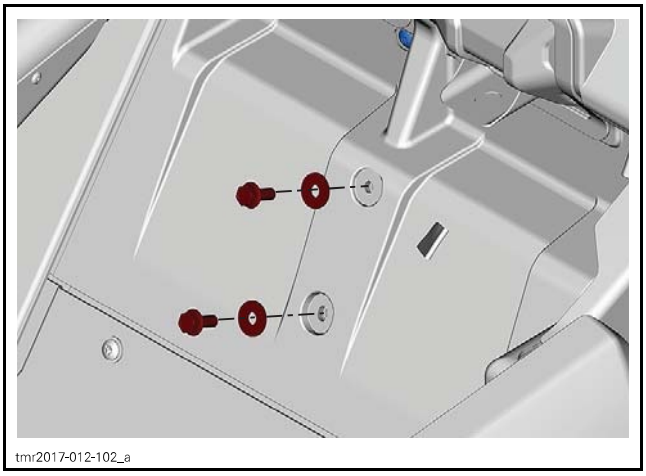
tmr2017-012-102_a

From underneath of rear rack, disconnect inlet hoses from air filter housing

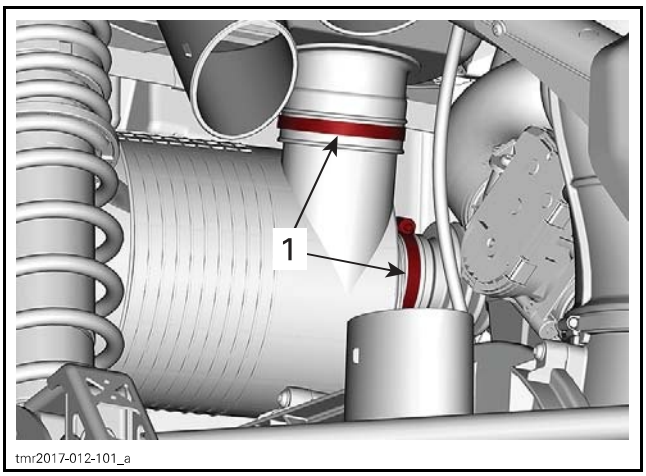

tmr2017-012-101_a

MANY PARTS REMOVED FOR CLARITY PURPOSE
1. *Loose these clamps*

Remove the air filter housing from the vehicle.

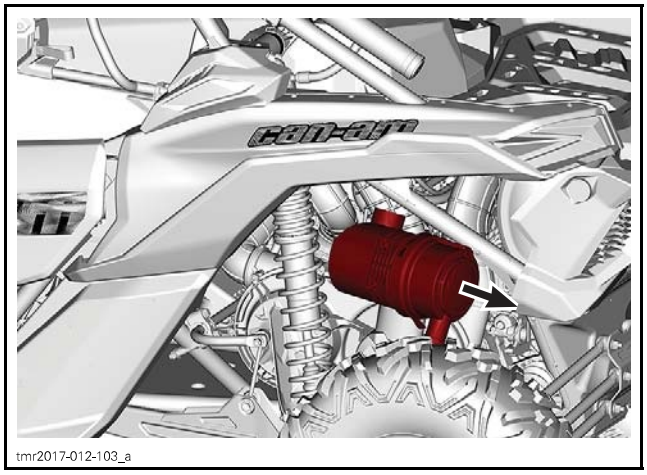

tmr2017-012-103_a

Installing the Air Filter Housing

The installation is the reverse of the removal procedure. However, pay attention to the following details.

When installing the inlet tube, make sure to position the tab of the inlet tube in the slot of the air inlet housing.

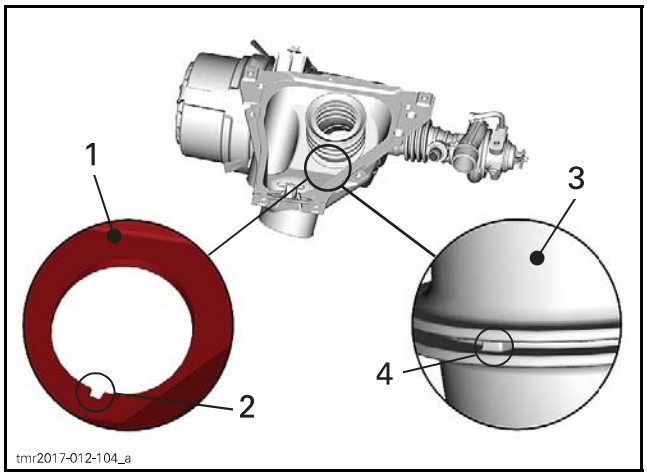

tmr2017-012-104_a

1. *Air inlet housing*
2. *Air inlet housing slot*
3. *Inlet tube*
4. *Inlet tube tab*

During turbo inlet tube installation, position the tab of the air filter housing inside both tab of the turbo inlet tube.

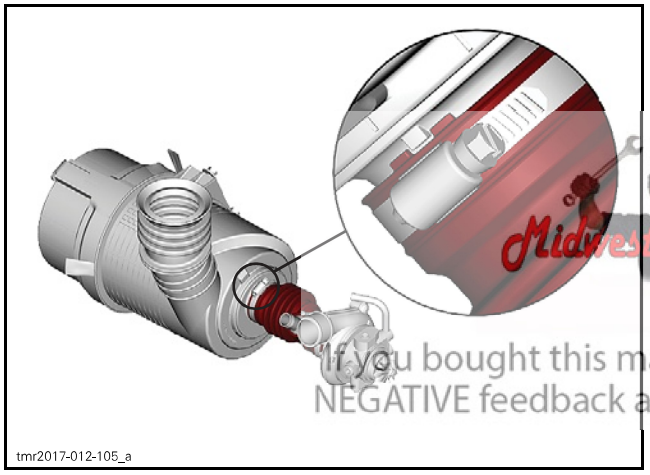

Midwest Manuals
Green Manuals
Paperless Manuals
For a Better Tomorrow
If you bought this manual from any other seller please leave them
NEGATIVE feedback and notify me at bestshopmanuals@gmail.com

When installing the turbo inlet tube on the turbo, position the tab of the tube against the turbo.

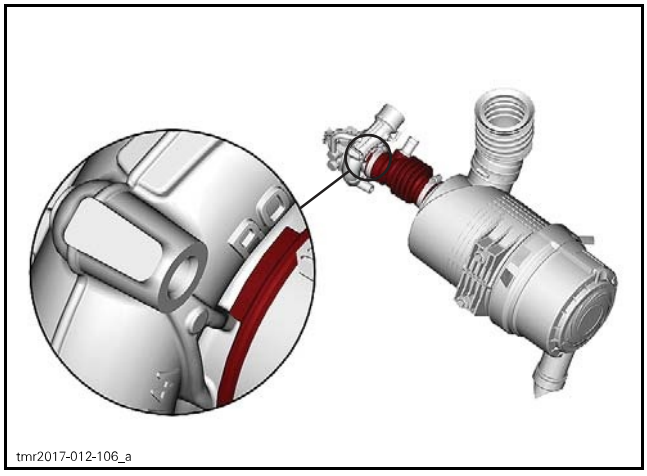

EXHAUST SYSTEM

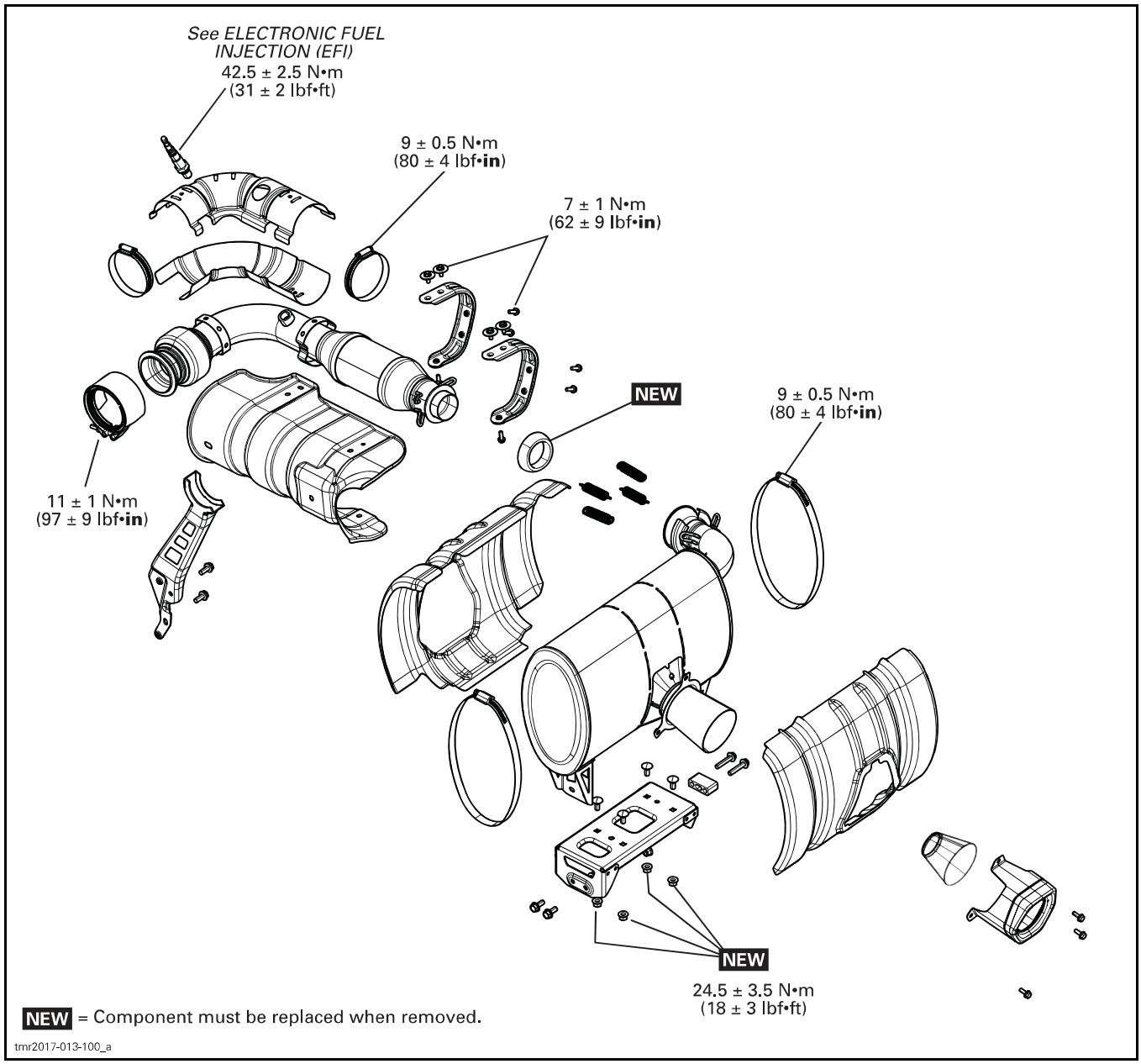

PROCEDURES

⚠ WARNING

Never touch exhaust system components immediately after the engine has run.

SPARK ARRESTER

For spark arrester servicing, refer to *PERIODIC MAINTENANCE PROCEDURES* subsection.

MUFFLER

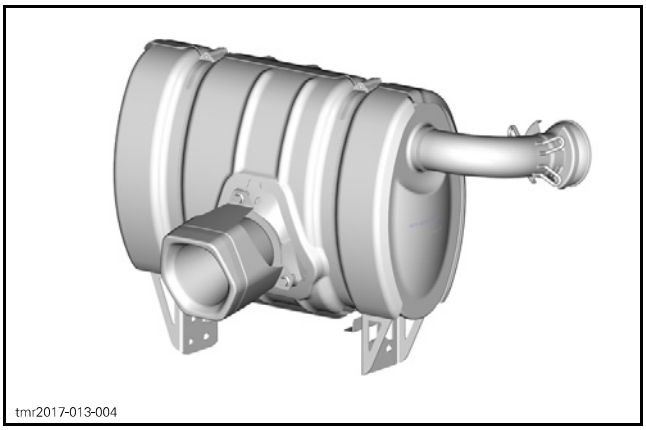

tmr2017-013-004

Removing the Muffler

1. Remove rear fascia.

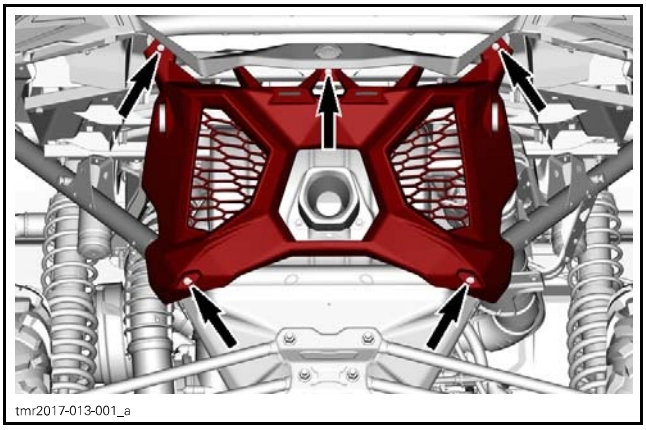

tmr2017-013-001_a

2. Remove screws holding muffler to support on each side.

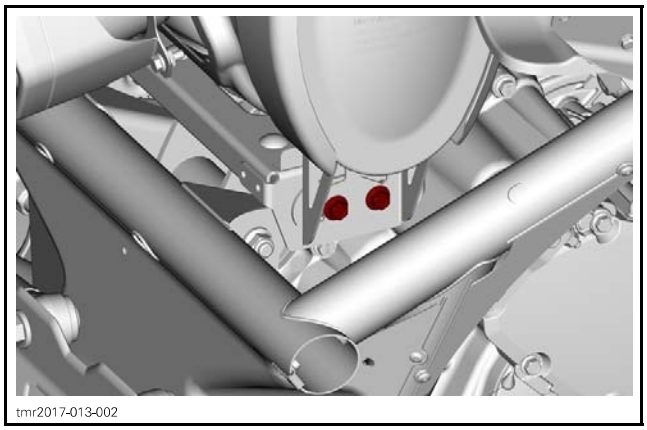

tmr2017-013-002

3. Remove springs securing muffler to exhaust pipe and remove muffler.

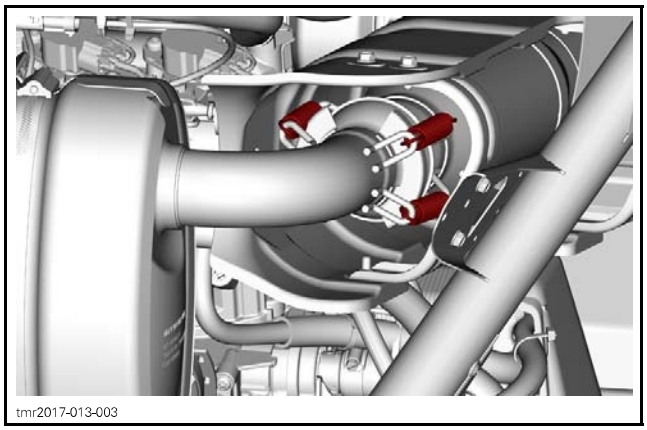

tmr2017-013-003

Inspecting the Muffler

Check muffler for cracks or other damages. Replace if necessary.

Installing the Muffler

For the installation, reverse the removal procedure.

See exploded view for torque specifications.

REPLACING THE EXHAUST PIPE GASKET

1. Remove the muffler. See procedure in this subsection.
2. Remove the old gasket from the exhaust pipe.

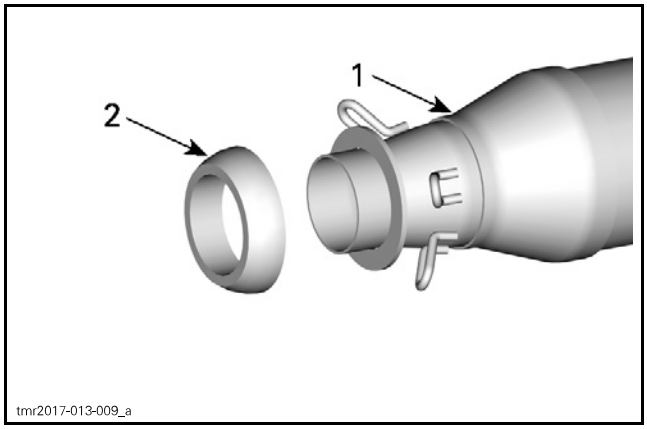

1. Exhaust pipe
2. Exhaust pipe gasket

3. Install a new gasket on the exhaust pipe.
4. Install the muffler as per procedure in this subsection.

NOTE: Be sure to apply specified torques and verify for proper clearances as specified.

CATALYST

The catalyst is part of the exhaust pipe.

EXHAUST PIPE

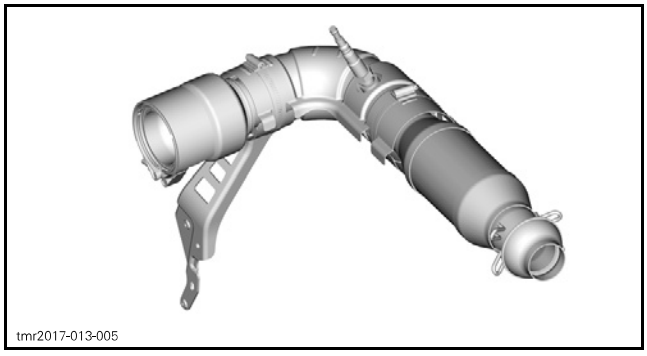

Removing the Exhaust Pipe

1. Remove the muffler, refer to *REMOVING THE MUFFLER* in this subsection.
2. Disconnect oxygen sensor.

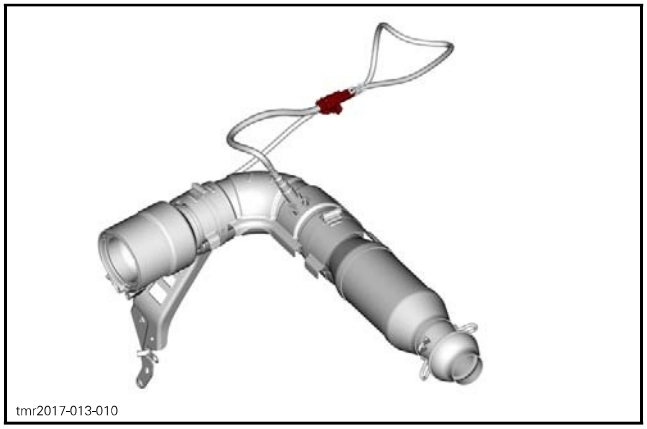

DISCONNECT OXYGEN SENSOR

3. Remove exhaust heat shield with brackets.

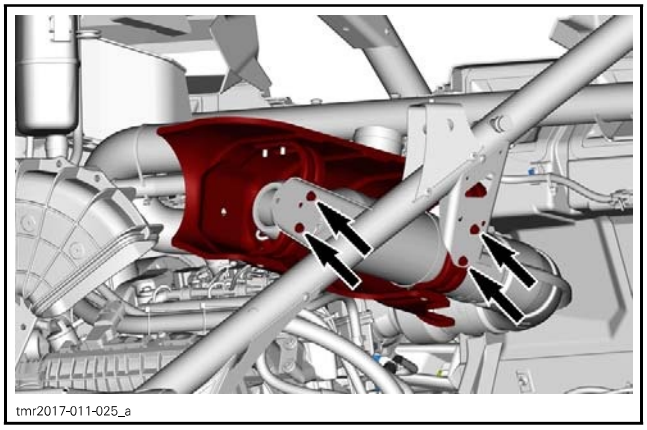

4. Remove clamps securing heat shields to exhaust pipe and remove heat shields.

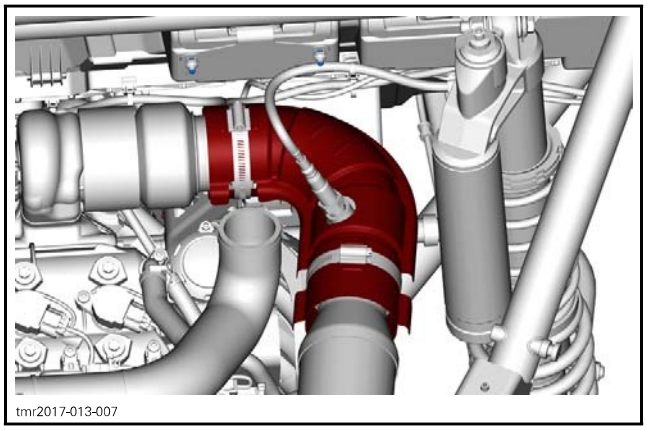

5. Remove V-Band clamp and remove exhaust pipe.

NOTE: The V-band clamp nut is stainless steel, do not use power tools as nut may seize on stud.

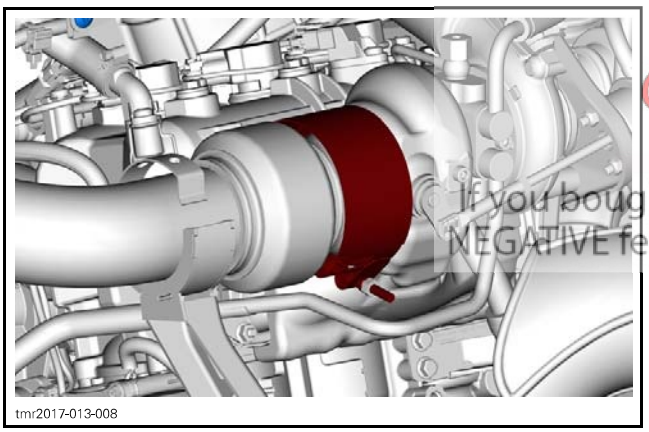
tmr2017-013-008

Midwest Manuals
Green Manuals
Paperless Manuals
For a Better Tomorrow
If you bought this manual from any other seller please leave them NEGATIVE feedback and notify me at bestshopmanuals@gmail.com

Inspecting the Exhaust Pipe

Check head pipe for cracks, bending or other damages. Replace if need.

Installing the Exhaust Pipe

The installation is the reverse of the removal procedure. However, pay attention to the following.

Install new exhaust gasket.

See exploded view for torque specifications.

Make sure V-band clamp is properly seated by rotating it back and forth before final clamping. Make sure V-band clamp heat shield is located as shown.

NOTE: The V-band clamp nut is stainless steel, do not use power tools as nut may seize on stud.

LUBRICATION SYSTEM

SERVICE TOOLS

Description	Part Number	Page
ADAPTER HOSE	529 035 652	5
ECM ADAPTER TOOL	529 036 166	8
FLUKE 115 MULTIMETER	529 035 868	7–8
PRESSURE GAUGE	529 035 709	6

SERVICE PRODUCTS

Description	Part Number	Page
LOCTITE 243 (BLUE)	293 800 060	6, 8

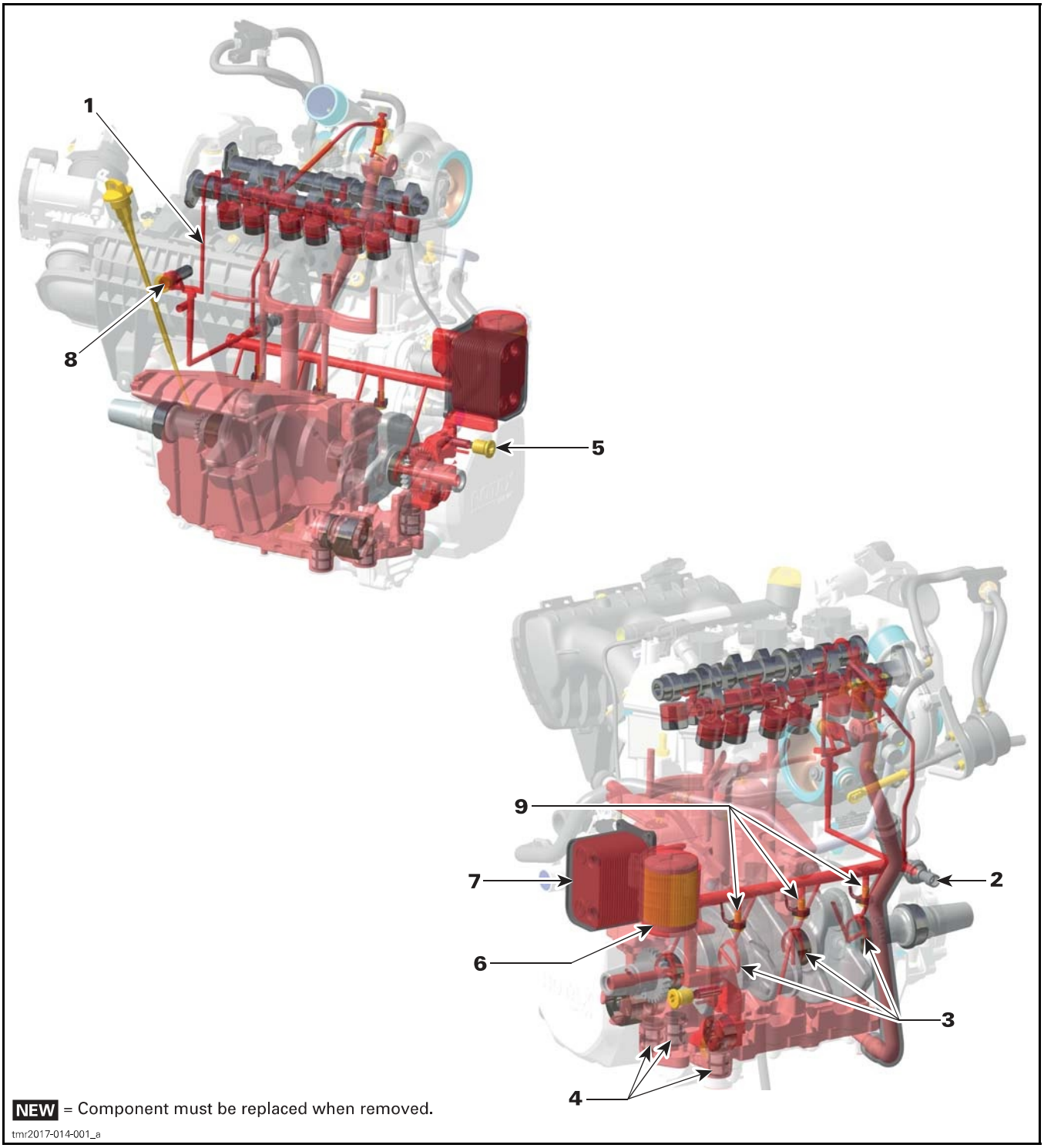

ENGINE LUBRICATION CIRCUIT
1. *Oil channel to camshaft bearings*
2. *Oil pressure switch*
3. *Crankshaft main bearings*
4. *Oil strainers*
5. *Oil pressure regulator*
6. *Oil filter*
7. *Oil cooler*
8. *Timing chain tensioner*
9. *Oil Nozzles*

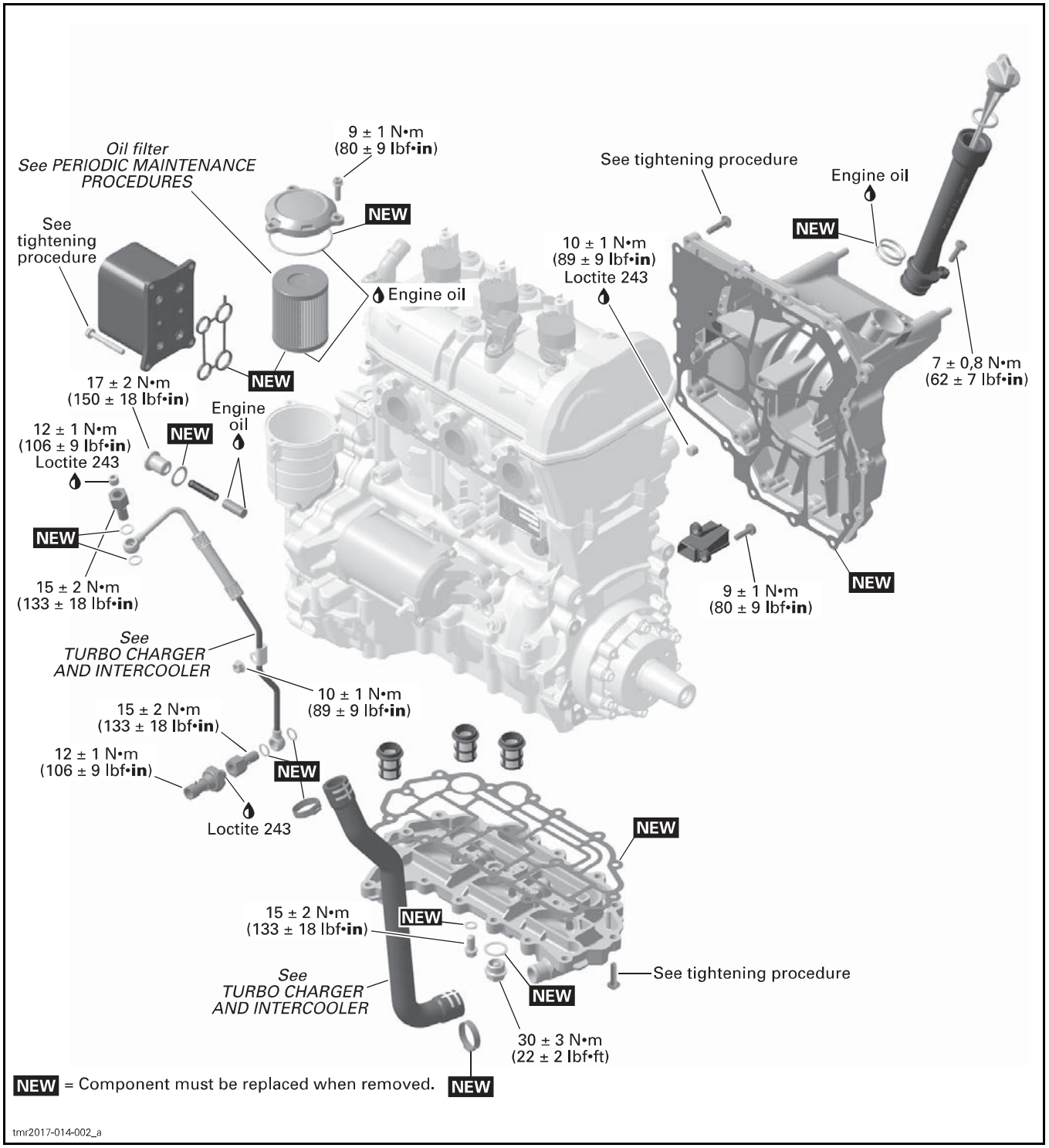
Oil filter
See PERIODIC MAINTENANCE PROCEDURES
9 ± 1 N•m
(80 ± 9 lbf•in)
NEW
Engine oil
See tightening procedure
17 ± 2 N•m
(150 ± 18 lbf•in)
NEW
Engine oil
12 ± 1 N•m
(106 ± 9 lbf•in)
Loctite 243
NEW
15 ± 2 N•m
(133 ± 18 lbf•in)
See TURBO CHARGER AND INTERCOOLER
10 ± 1 N•m
(89 ± 9 lbf•in)
15 ± 2 N•m
(133 ± 18 lbf•in)
12 ± 1 N•m
(106 ± 9 lbf•in)
NEW
Loctite 243
See tightening procedure
Engine oil
NEW
10 ± 1 N•m
(89 ± 9 lbf•in)
Loctite 243
7 ± 0,8 N•m
(62 ± 7 lbf•in)
9 ± 1 N•m
(80 ± 9 lbf•in)
NEW
NEW
15 ± 2 N•m
(133 ± 18 lbf•in)
NEW
See TURBO CHARGER AND INTERCOOLER
See tightening procedure
NEW
30 ± 3 N•m
(22 ± 2 lbf•ft)
NEW = Component must be replaced when removed.
NEW
tmr2017-014-002_a

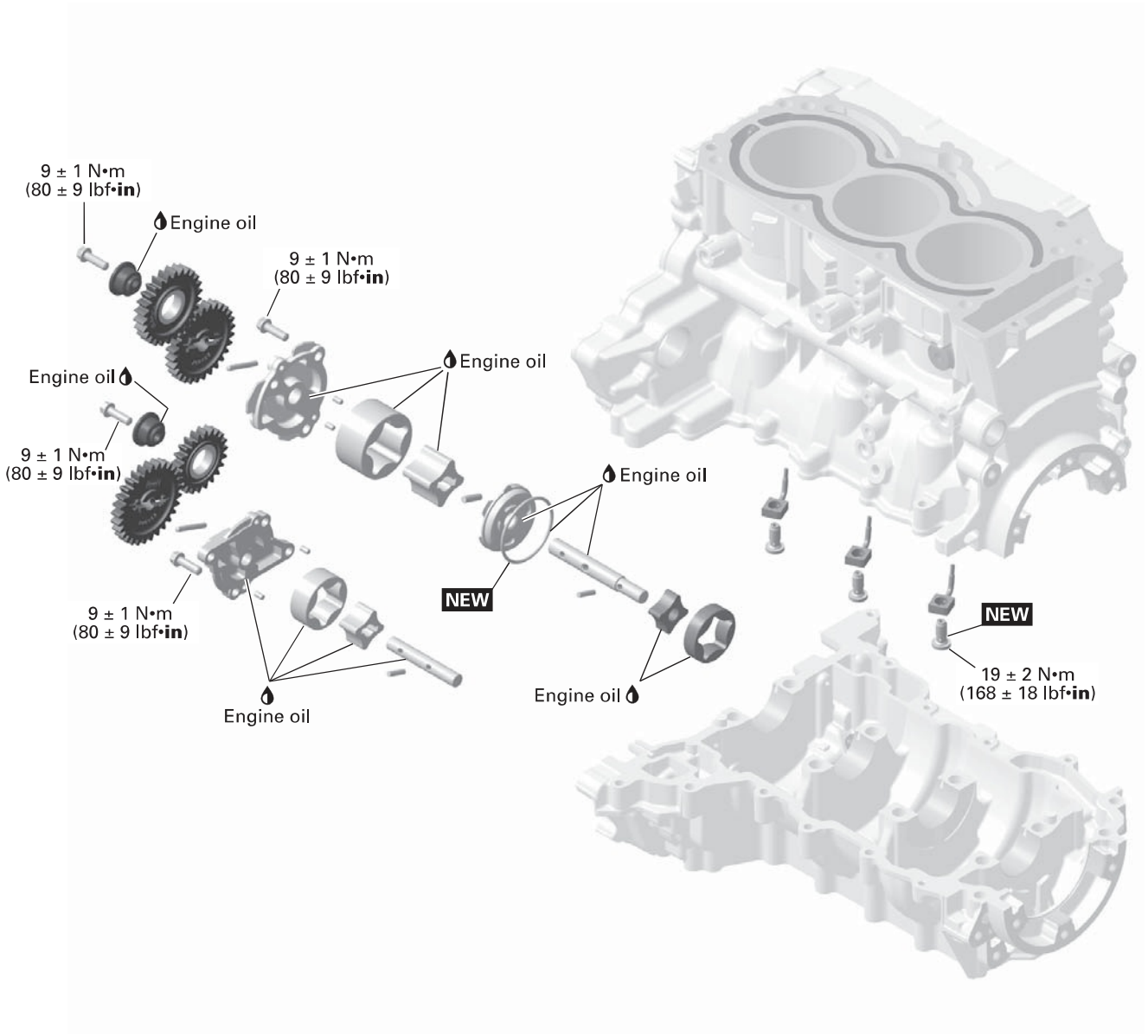

NEW = Component must be replaced when removed.

tmr2017-014-003_a

GENERAL

During assembly/installation, use the torque values and service products as in the exploded views.

Clean threads before applying a threadlocker. Refer to *SELF-LOCKING FASTENERS* and *LOCTITE APPLICATION* at the beginning of this manual for complete procedure.

⚠ WARNING

Torque wrench tightening specifications must be strictly adhered to. Locking devices when removed (e.g.: locking tabs, elastic stop nuts, cotter pins, etc.) must be replaced with new ones.

NOTICE **Hoses, cables or locking ties removed during a procedure must be reinstalled as per factory standards.**

SYSTEM DESCRIPTION

This engine uses dry sump lubrication. The oil from the cylinder block, timing chain chamber and magneto cover is pumped by two suction pumps.

Both suction pumps are integrated into one module.

The 20 mm (.79 in) large oil suction pump returns the crankshaft and magneto chamber oil to the reservoir.

The 11 mm (.43 in) small oil suction pump returns the timing chain chamber oil to the oil reservoir.

An oil filter and three oil strainers are used to filter dirt and debris from the oil circuit.

The oil strainers are located between oil sump cover and crankcase lower underneath the oil pressure pump.

The oil pressure is provided by a pump and regulated by a spring loaded pressure regulator.

INSPECTION

ENGINE OIL PRESSURE

The engine oil pressure plug is located on the LH side of the cylinder block, behind the CVT housing and below the timing chain tensioner.

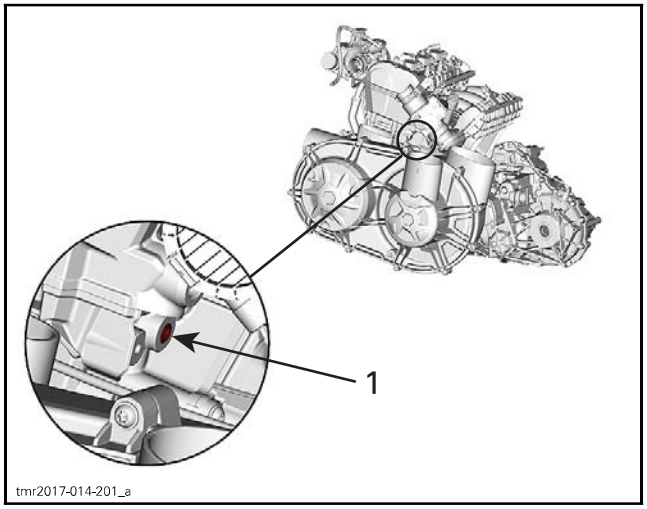

1. Oil pressure test plug screw

1. Remove oil pressure test plug screw from cylinder block.

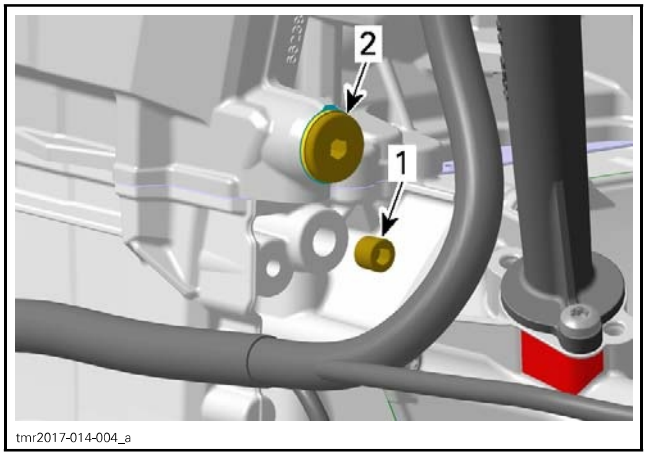

1. Oil pressure test plug screw
2. Timing chain tensioner

2. Install the adapter hose on cylinder block.

REQUIRED TOOLS	
ADAPTER HOSE (P/N 529 035 652)	

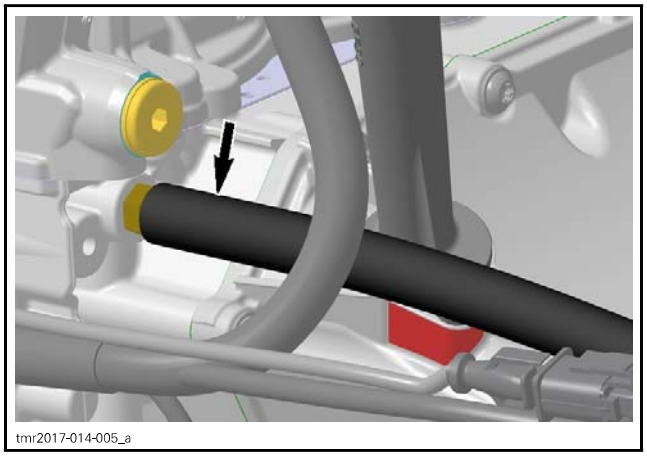

3. Connect the pressure gauge to adapter hose.

REQUIRED TOOL	
PRESSURE GAUGE (P/N 529 035 709)	

4. Start engine and check the oil pressure.

ENGINE OIL PRESSURE @ 100°C (212°F)	
ENGINE SPEED	MINIMUM PRESSURE
Idle	80 kPa (11.6 PSI)
4000 RPM	270 kPa (39.16 PSI)
6000 to 7250 RPM	350 kPa (50.76 PSI)

If the engine oil pressure is out of specification, refer to *TROUBLESHOOTING* in this subsection.

5. Remove engine oil pressure test tools.
6. Clean threads of oil pressure test plug screw before installing the plug screw.
7. Tighten oil pressure test plug screw to specification.

TIGHTENING TORQUE	
Service product	LOCTITE 243 (BLUE) (P/N 293 800 060)
Oil pressure test plug screw	12 N•m ± 1 N•m (106 lbf•**in** ± 9 lbf•**in**)

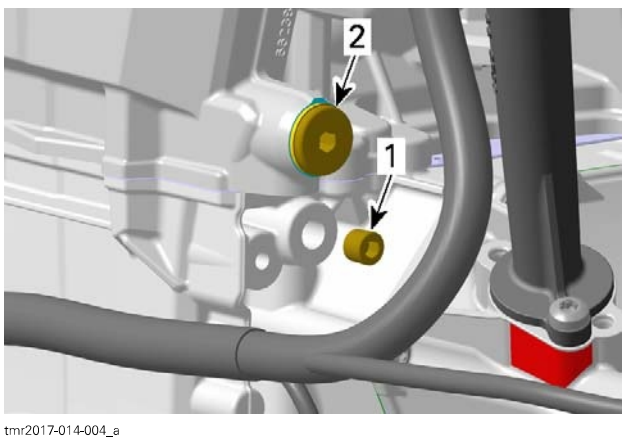

tmr2017-014-004_a

1. Oil pressure test plug screw
2. Timing chain tensioner

8. Reinstall all removed parts.

TROUBLESHOOTING

Always check for fault codes. If a fault code is detected, service the fault code first.

LOW OR NO ENGINE OIL PRESSURE

1. **Oil level is too low.**
   - *Refill engine oil.*
   - *Check for high oil consumption. See below.*
   - *Check for oil leaks (oil leaking out of leak indicator hole, gaskets, oil seal or O-rings). Repair or replace.*
2. **Defective or clogged oil filter**
   - *Replace engine oil and filter.*
3. **Use of a bad grade oil**
   - *Replace engine oil with BRP recommended oil.*
4. **Oil pressure regulator valve sticks open, or spring load is insufficient.**
   - *Clean oil regulator piston and its bore. Replace if necessary.*
   - *Measure spring free length. Replace if out of specification.*
5. **Oil pump(s) worn or damaged.**
   - *Check if oil pump drive gears are damaged. Replace if necessary.*
   - *Check oil pump rotors and its bore for wear limits. Replace if out of specification.*
6. **Engine oil strainer is clogged.**
   - *Remove and clean engine oil strainer.*
7. **Heavy wear on plain bearings.**
   - *Check radial clearance of plain bearings. Replace if out of specification.*

HIGH OIL CONSUMPTION

1. **Oil in breathing system.**
   - *Check if breather V-ring is brittle, hard or damaged. Replace V-ring.*
   - *Check if oil separator cover is damaged or missing.*
2. **Valve stem seals worn or damaged.**
   - *Replace valve stem seals.*
3. **Piston rings worn out (blue colored exhaust smoke).**
   - *Replace piston rings.*

OIL CONTAMINATION (WHITE APPEARANCE)

1. **Oil seal and rotary seal on water pump shaft leaking.**
   - *Replace oil seal, rotary seal and water pump shaft. Change engine oil.*
2. **Cylinder head gasket leaking.**
   - *Replace cylinder head gasket. Change engine oil.*

3. Cylinder head screws not properly tightened.
   - *Retighten screws with recommended torque. Change engine oil.*
4. Oil cooler gasket leaking.
   - *Replace gasket. Change engine oil.*

PROCEDURES

OPS (OIL PRESSURE SWITCH)

OPS Activation

The oil pressure switch activates when the engine oil pressure is lower than following specified pressure range.

NOTE: ECM does not trigger the OPS signal below 4500 rpm.

OIL PRESSURE SWITCH ACTIVATION RANGE
20 kPa to 40 kPa (2.9 PSI to 5.8 PSI)

OPS Location

The OPS is located on the front of the cylinder head, near the starter.

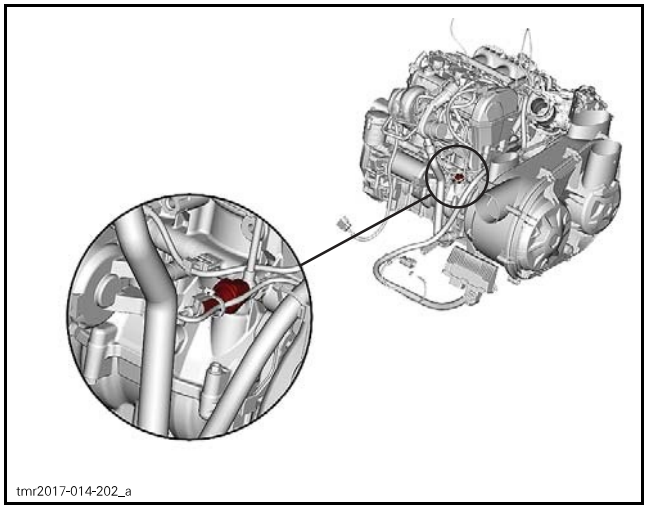

Inspecting the OPS

First, ensure oil pressure is adequate. Refer to *ENGINE OIL PRESSURE*.

If the oil pressure is good, check the resistance of the oil pressure switch.

Testing the OPS Resistance

The engine must be warm to check the oil pressure switch properly.

⚠ WARNING

Be careful when working near hot part. To avoid potential burns, never touch exhaust system components immediately after the engine has been running as these components are very hot. Always use long sleeves and gloves.

1. Cut locking tie and disconnect the OPS connector.

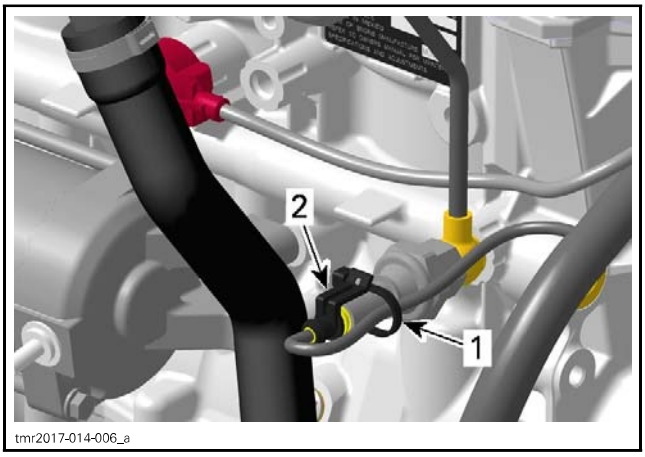

UNDER EXHAUST MANIFOLD
1. *Locking tie*
2. *OPS connector*

2. Check the oil pressure switch resistance.

REQUIRED TOOL	
FLUKE 115 MULTIMETER (P/N 529 035 868)	

3. Read result and compare to table.

RESISTANCE (Ω)		
ENGINE NOT RUNNING		
OPS pin	Engine ground	Close to 0 Ω (normally closed switch)

If resistance is out of specification, replace the oil pressure switch.

If the resistance is correct, continue procedure. It will be necessary to use jumper wires.

4. Start engine.
5. Read result and compare to table.

RESISTANCE (Ω)		
ENGINE RUNNING		
OPS pin	Engine ground	Infinitely high (OL)

If resistance is out of specification, replace the oil pressure switch.

If the resistance is correct, check the oil pressure switch circuit continuity.

Testing the OPS Circuit Continuity

1. Disconnect ECM connector A. Refer to *ECM CONNECTOR ACCESS* in *ELECTRONIC FUEL INJECTION)* subsection.
2. Install connector A to the ECM adapter.

REQUIRED TOOL	
ECM ADAPTER TOOL (P/N 529 036 166)	

3. Cut locking tie and disconnect the OPS connector.

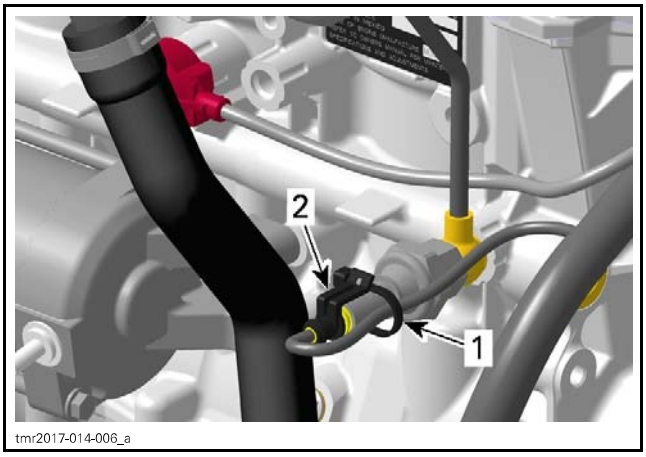

1. Locking tie
2. OPS connector

4. Check continuity as follows.

REQUIRED TOOL	
FLUKE 115 MULTIMETER (P/N 529 035 868)	

CIRCUIT CONTINUITY		
OPS connector	ECM A pin E3	Close to 0 Ω

If the continuity is good and all other tests are performed, try a NEW ECM.

If the continuity is bad, repair or replace defective wire or connectors.

Removing the OPS

1. Cut locking tie and unplug the OPS switch connector.

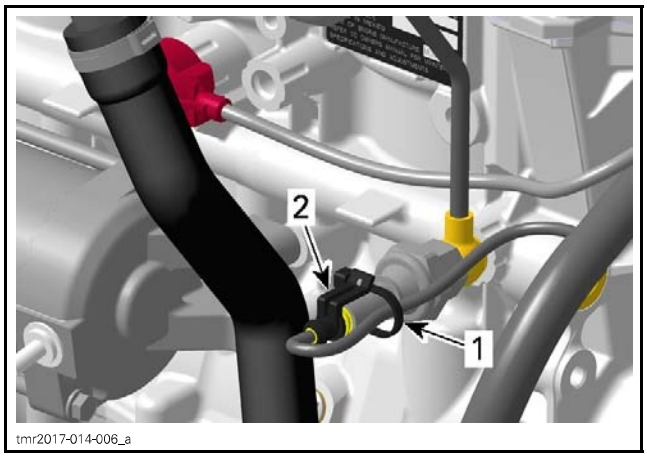

1. Locking tie
2. OPS connector

2. Unscrew and remove the OPS.

NOTICE **During OPS removal hold threaded nipple.**

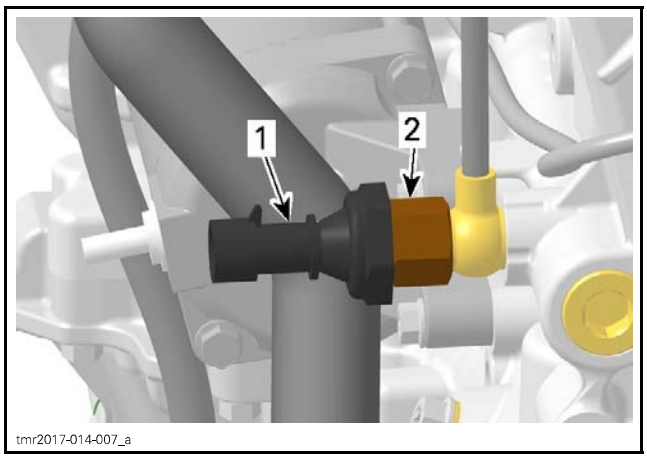

1. Oil pressure switch
2. Threaded nipple

Installing the OPS

Install oil pressure switch as per the following informations.

TIGHTENING TORQUE	
Service product	LOCTITE 243 (BLUE) (P/N 293 800 060)
Oil pressure switch	12 N•m ± 1 N•m (106 lbf•**in** ± 9 lbf•**in**)

Install all other removed parts.

NOTICE **When installing the locking tie on the OPS connector, take care that the wires do not make a sharp bend.**

OIL FILLER TUBE

Oil Filler Tube Location

The oil filler tube is located behind the throttle body.

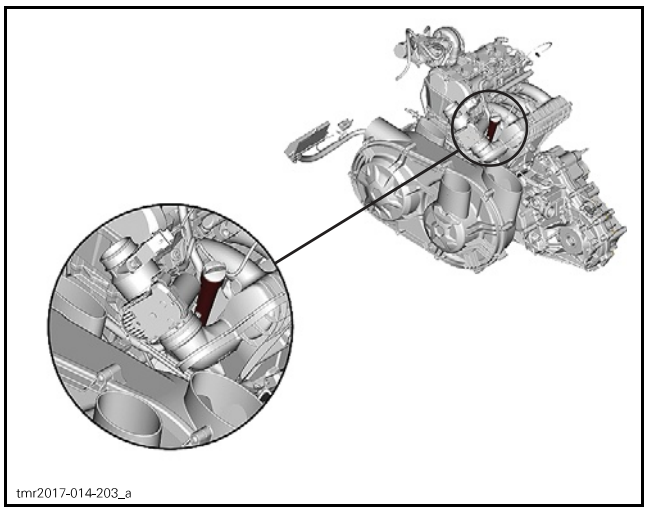

Removing the Oil Filler Tube

1. Remove the oil filler tube retaining screw.

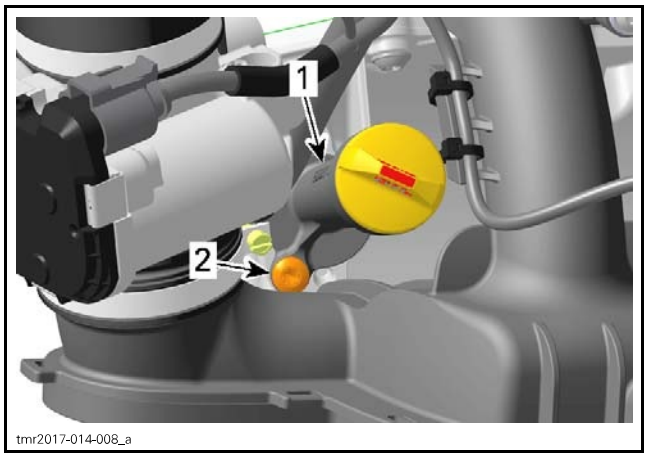

1. Oil filler tube
2. Retaining screw

2. Pull filler tube out of the oil tank cover

Installing the Oil Filler Tube

1. Install **NEW** O-rings on the oil filler tube.

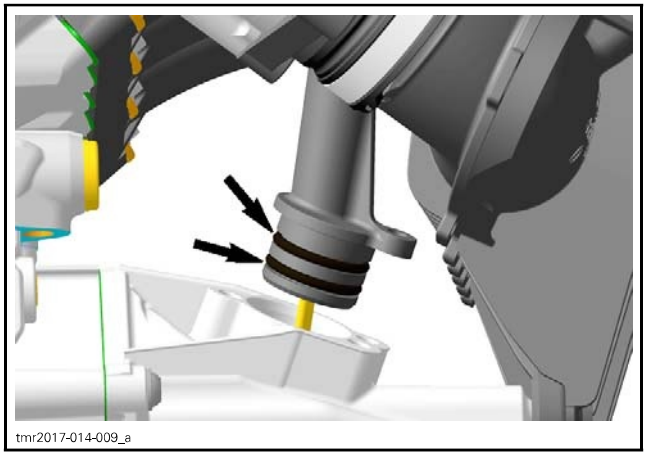

2. Lubricate the oil tank cover bore with engine oil.

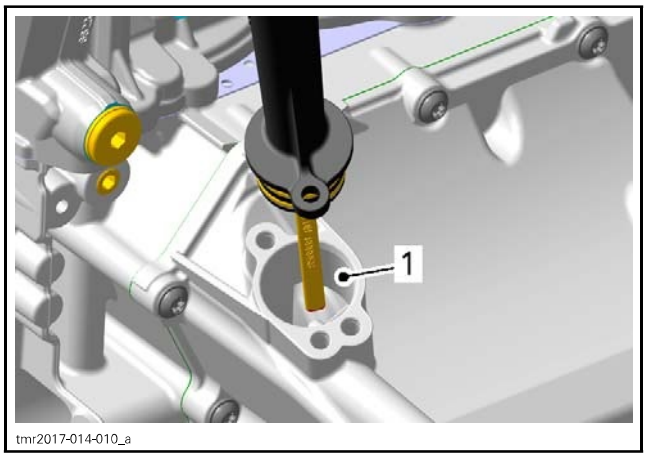

1. Lubricate the oil tank cover bore

3. Install the oil filler tube.
4. Tighten retaining screw to the specified torque.

TIGHTENING TORQUE	
Oil filler tube screw	7 N•m ± 0.8 N•m (62 lbf•**in** ± 7 lbf•**in**)

5. Install all other removed parts.

OIL TANK

Removing the Oil Tank Cover

1. Drain engine oil. Refer to *PERIODIC MAINTENANCE PROCEDURES* subsection.
2. Remove the engine from vehicle. Refer to *ENGINE REMOVAL AND INSTALLATION* subsection.
3. Remove intake manifold. Refer to *AIR INTAKE SYSTEM* subsection.
4. Place a drain pan underneath oil tank.
5. Unscrew oil tank cover retaining screws.

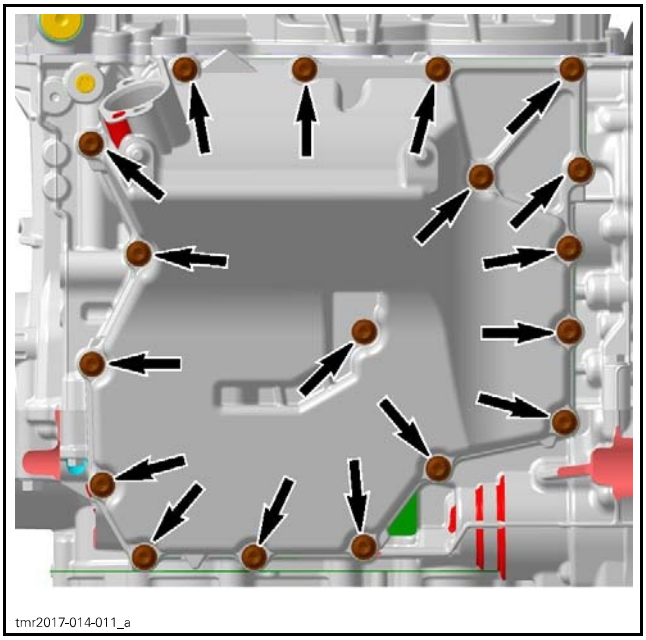

RETAINING SCREWS

6. Remove oil tank from the engine.

Installing the Oil Tank Cover

1. Install **NEW** gasket.
2. Install the oil tank on the engine, then tighten screws in two steps as follows:
   2.1 Tighten the following screws to the specified torque and sequence.

TIGHTENING TORQUE		
Oil tank screws	STEP A	5 N•m ± 0.6 N•m (44 lbf•**in** ± 5 lbf•**in**)

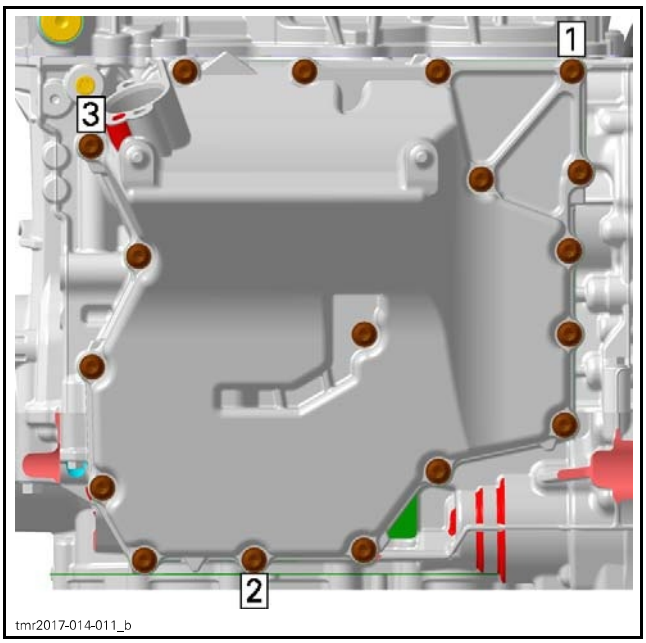

TIGHTENING SEQUENCE STEP A

   2.2 Tighten the following screws to the specified torque and sequence.

TIGHTENING TORQUE		
Oil tank screws	STEP B	9 N•m ± 1 N•m (80 lbf•**in** ± 9 lbf•**in**)

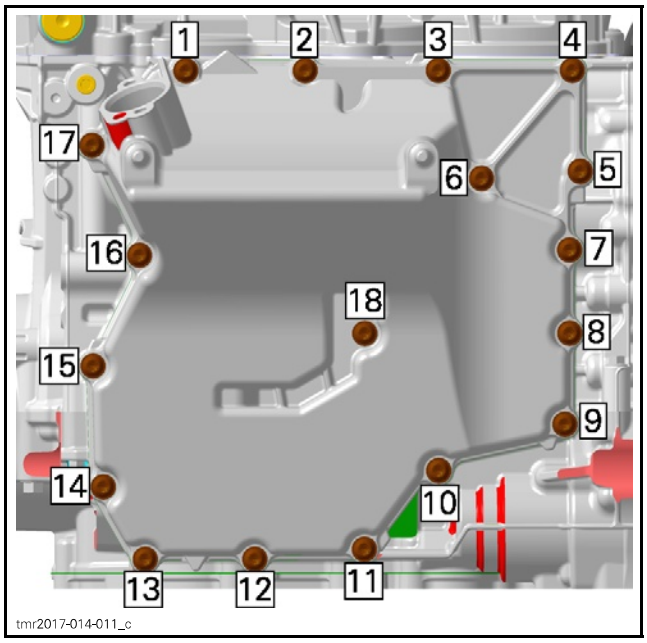

TIGHTENING SEQUENCE STEP B

3. Wipe off any oil spillage.
4. Install intake manifold. Refer to *AIR INTAKE SYSTEM* subsection.
5. Install the engine in the vehicle. Refer to *ENGINE REMOVAL AND INSTALLATION* subsection.
6. Fill up oil tank and check oil level. Refer to *PERIODIC MAINTENANCE PROCEDURES* subsection.

OIL COOLER

Oil Cooler Location

The oil cooler is located on the RH side of the engine, over the magneto cover.

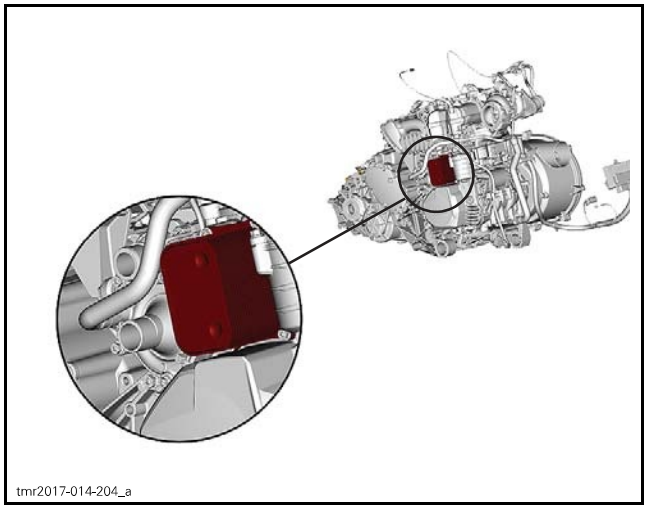

Removing the Oil Cooler

1. Refer to *PERIODIC MAINTENANCE PROCEDURES* subsection to :
   – Drain engine oil
   – Drain cooling system.
2. Place rags or towels under oil cooler to catch remaining oil and coolant.
3. Remove:
   – Retaining screws
   – Oil cooler
   – Gasket.

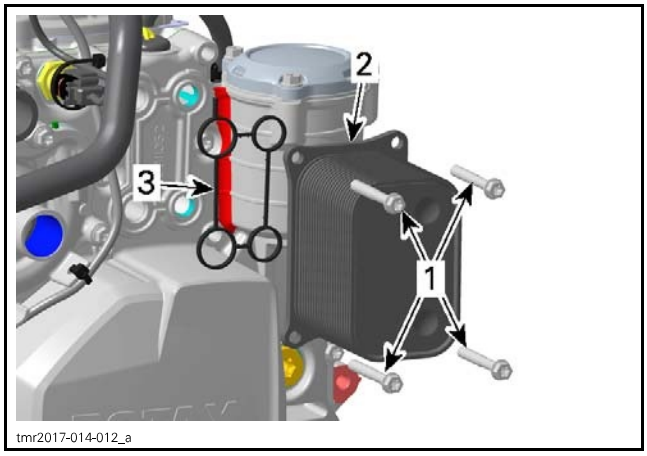

1. *Retaining screws*
2. *Oil cooler*
3. *Gasket*

Inspecting the Oil Cooler

Check oil cooler for cracks and other damage.

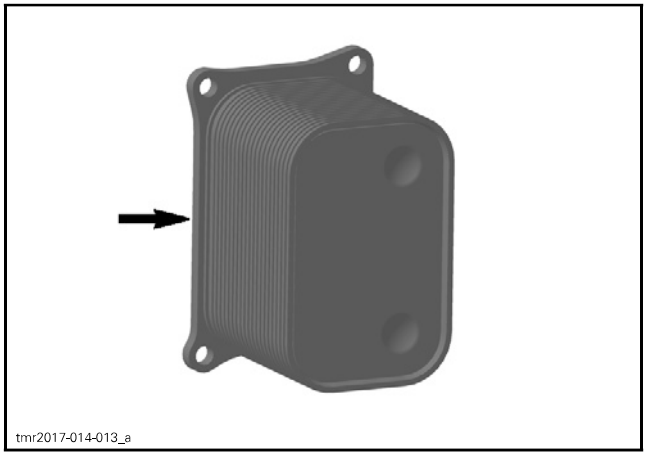

Replace parts as necessary.

Installing the Oil Cooler

For installation, reverse the removal procedure. However, pay attention to the following.

Tighten oil cooler screws in two steps to the specified torque following the illustrated sequence.

TIGHTENING TORQUE		
OIL COOLER SCREWS	STEP A	5 N•m ± 0.6 N•m (44 lbf•**in** ± 5 lbf•**in**)
	STEP B	9 N•m ± 1 N•m (80 lbf•**in** ± 9 lbf•**in**)

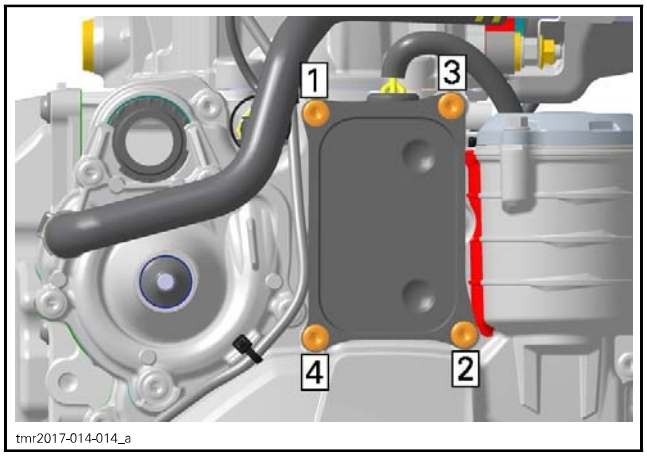

TIGHTENING SEQUENCE OIL-COOLER

Wipe off any oil and coolant spillage.

Refer to *PERIODIC MAINTENANCE PROCEDURES* subsection to:
– Fill up oil tank and check oil level
– Refill and bleed cooling system.

ENGINE OIL PRESSURE REGULATOR

Oil Pressure Regulator Location

The engine oil pressure regulator is located inside the magneto cover.

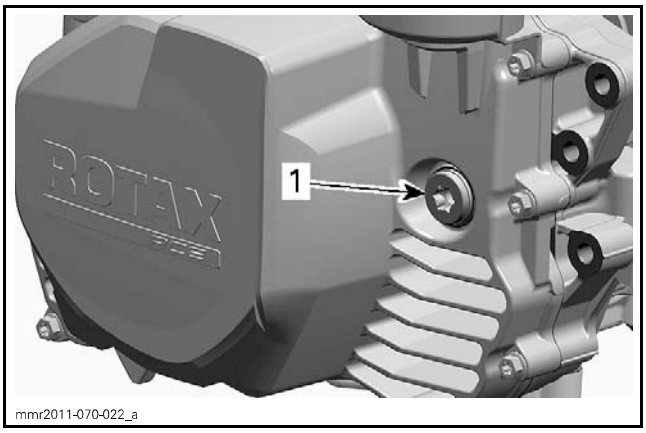

1. Engine oil pressure regulator

Removing the Oil Pressure Regulator

1. Drain engine oil. Refer to *PERIODIC MAINTENANCE PROCEDURES* subsection.
2. Remove regulator plug and sealing washer. Discard sealing washer.
3. Pull oil pressure regulator parts out of the magneto cover.

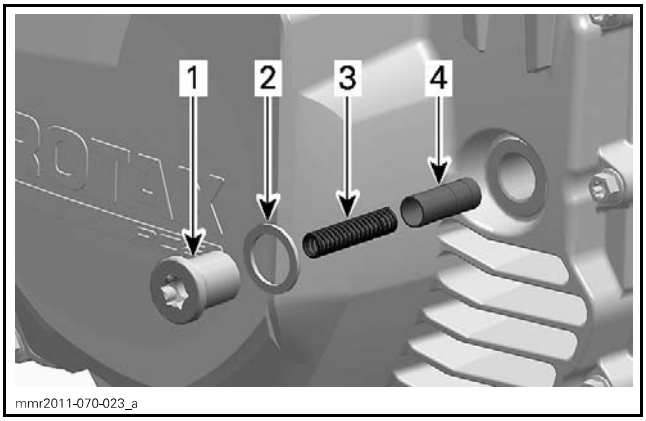

1. Plug
2. Sealing washer
3. Regulator spring
4. Regulator piston

Inspecting the Oil Pressure Regulator

Clean bore and thread in the magneto cover from any contamination.

Inspect oil pressure regulator piston and its bore in cylinder block for scoring or other damages.

Check if piston moves easily in its bore.

Check compression spring for free length.

SPRING FREE LENGTH	
NEW NOMINAL	46 mm (1.811 in)
SERVICE LIMIT	45 mm (1.772 in)

Visually check compression spring for squareness.

Replace worn or damaged components.

Installing the Oil Pressure Regulator

For installation, reverse the removal procedure. However, pay attention to the following.

Install a **NEW** sealing washer on plug.

Tighten regulator plug to the specified torque.

TIGHTENING TORQUE	
Oil pressure regulator plug	17 N•m ± 2 N•m (150 lbf•**in** ± 18 lbf•**in**)

Wipe off any oil spillage.

Fill up oil tank and check oil level. Refer to *PERIODIC MAINTENANCE PROCEDURES* subsection.

Install all other removed parts.

OIL PUMP DRIVE GEARS

Oil Pump Drive Gear Location

The oil pump gears are located on the MAG side, behind the magneto cover.

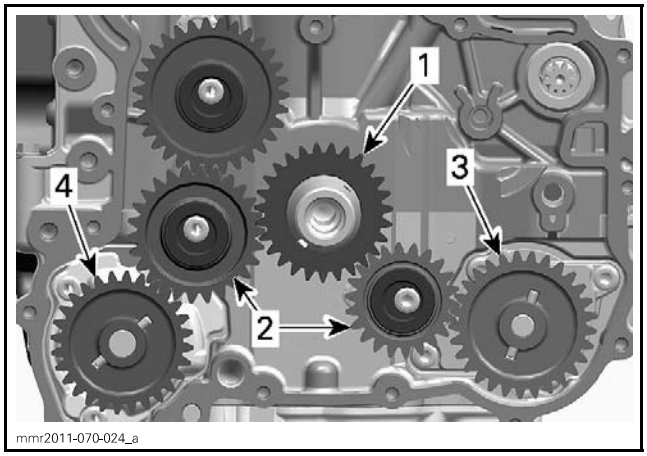

1. Oil pump drive gear
2. Intermediate gears
3. Oil pressure pump gear
4. Oil suction pump gear

Removing the Oil Pump Drive Gear

Refer to *MAGNETO AND STARTER* subsection to remove:

– Magneto cover

– Rotor
– Sprag clutch gear.

1. Unscrew oil pump intermediate gear screws.

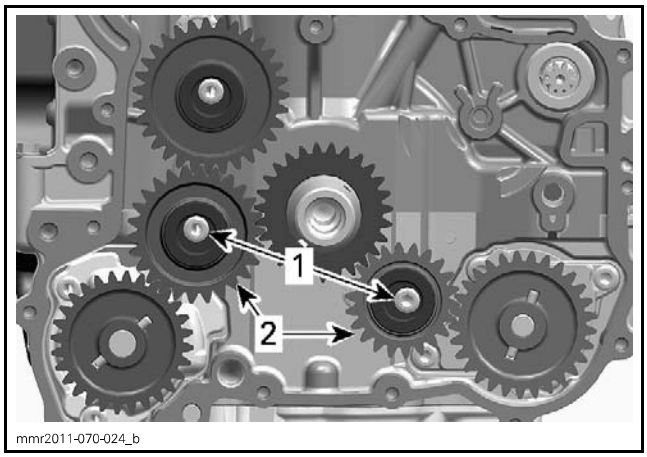

1. Retaining screws
2. Intermediate gears

2. Remove bearing sleeves and oil pump intermediate gears.

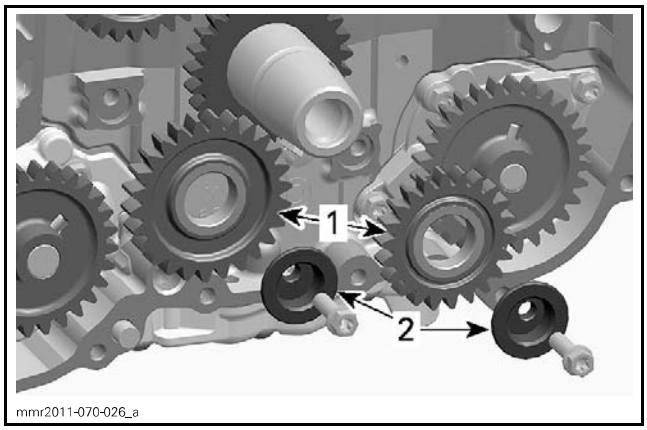

1. Intermediate gears
2. Bearing Sleeves

3. Remove oil pump gears and needle pins.

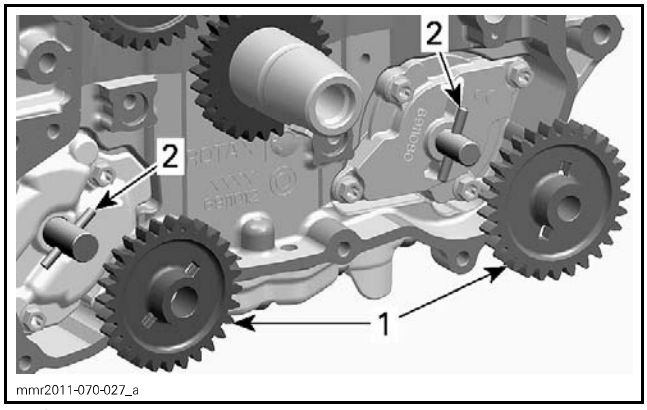

1. Oil pump gears
2. Needle pins

Inspecting the Oil Pump Drive Gear

Inspect gears for wear, cracks or other damage.

Replace if damaged.

Installing the Oil Pump Drive Gear

For installation, reverse the removal procedure, however, pay attention to the following.

1. Ensure not to mix up the oil pump gears, see next illustration.
   1.1 Install the BROWN oil pump gear (29 teeth) on oil pressure pump.
   1.2 Install the BLACK oil pump gear (28 teeth) on oil suction pump.

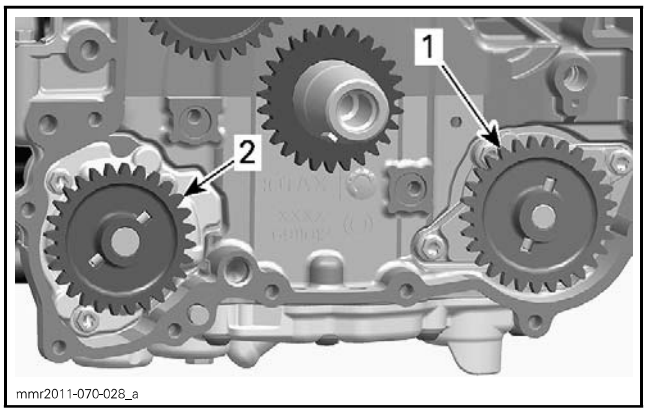

1. BROWN oil pump gear - 29 teeth
2. BLACK oil pump gear - 28 teeth

2. Lubricate intermediate gears bearing sleeves with engine oil, then install gears.
3. Install all other removed parts.
4. Fill up oil tank and check oil level. Refer to *PERIODIC MAINTENANCE PROCEDURES* subsection.

OIL PRESSURE PUMP

Oil Pressure Pump Location

The oil pressure pump is located in the cylinder block, behind the magneto cover.

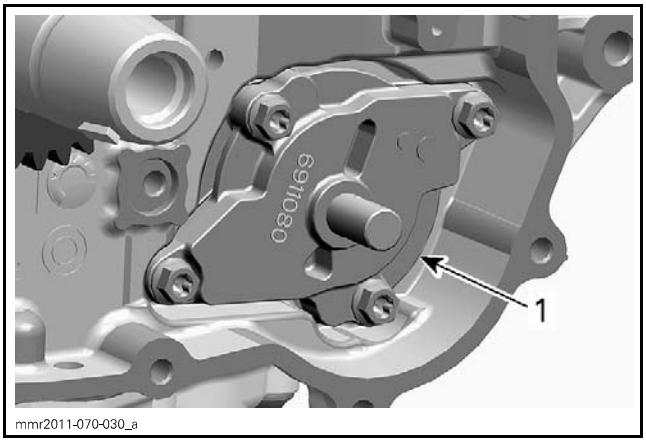

1. Oil pressure pump

Removing the Oil Pressure Pump

1. Remove *OIL PUMP DRIVE GEARS*, see procedure in this subsection.
2. Remove oil pump cover.

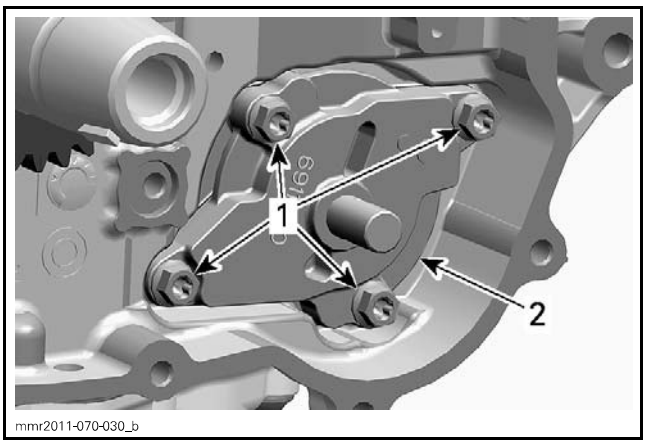

1. Retaining screws
2. Oil pump cover

3. Remove the following parts.

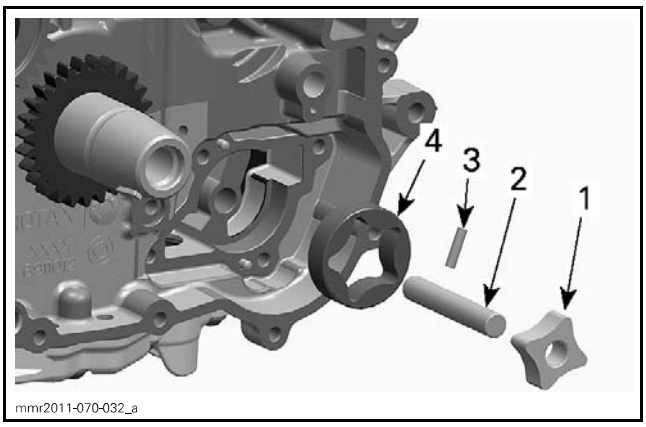

1. Inner rotor
2. Oil pump shaft
3. Needle pin
4. Outer rotor

Inspecting the Oil Pressure Pump

Inspect oil pump and oil pump cover bore for marks, scratches or other damage. Replace any damaged parts.

Check oil pump cover for damages and for surface straightness with a straight edge.

Check inner rotor for corrosion, worn pin slots or other damages. If so, replace inner and outer rotor at the same time.

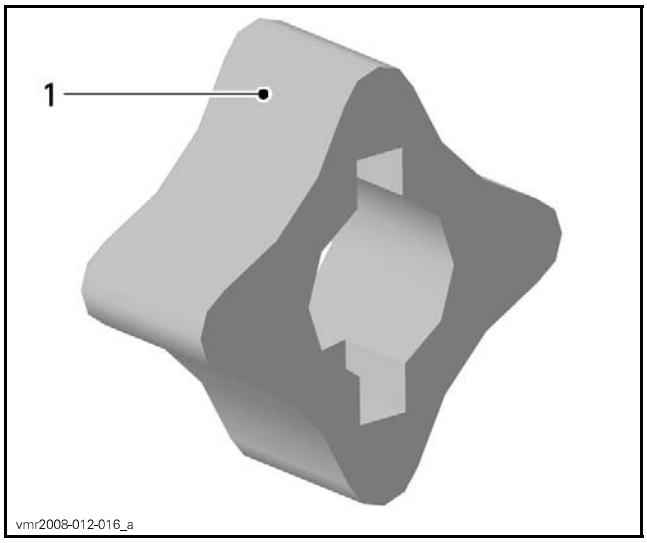

1. Pitting on the teeth

Radial Clearance

Using a feeler gauge, measure the clearance of outer rotor and inner rotor where shown with the arrows.

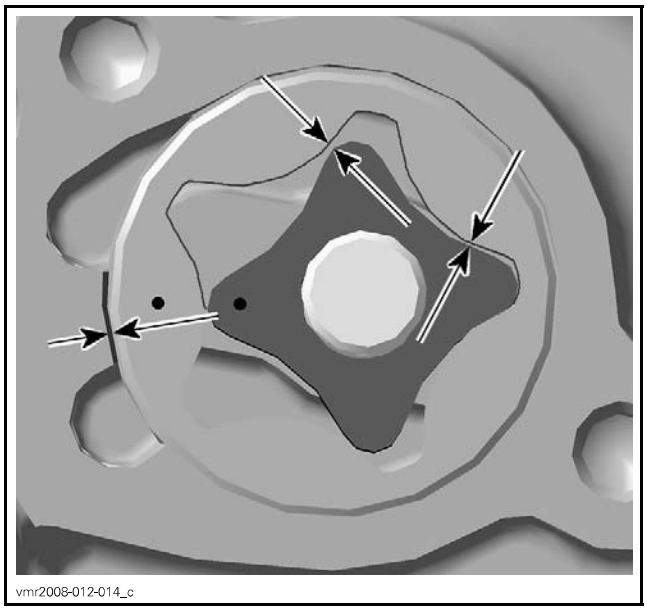

OIL PUMP RADIAL CLEARANCE	
SERVICE LIMIT	0.25 mm (.0098 in)

NOTE: If clearance of inner and outer rotors exceeds the tolerance, replace oil pump.

Axial Clearance

Measure outer rotor thickness with a micrometer.

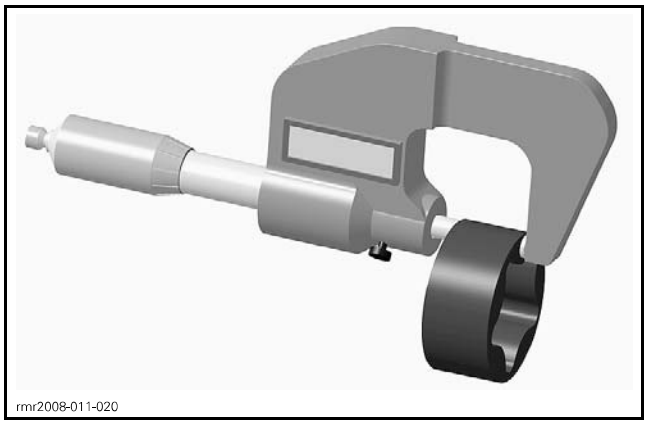

OUTER ROTOR THICKNESS

Using a depth gauge, measure the depth of oil pump bore in the lower crankcase.

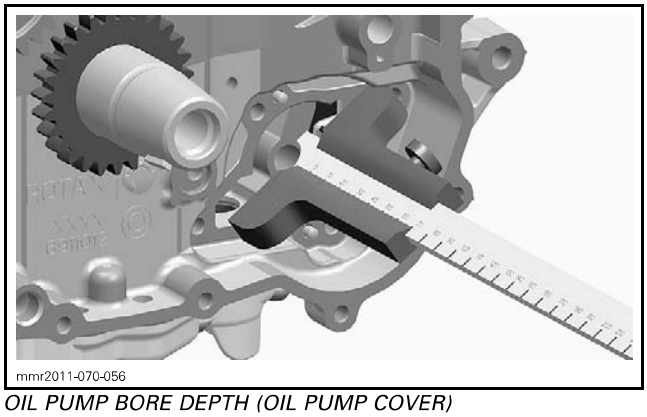

OIL PUMP BORE DEPTH (OIL PUMP COVER)

Substract bore depth from rotor thickness to obtain axial clearance.

OIL PUMP AXIAL CLEARANCE	
SERVICE LIMIT	0.15 mm (.0059 in)

NOTE: When the axial clearance of the oil pump assembly increases, the oil pressure decreases.

Installing the Oil Pressure Pump

For installation, reverse the removal procedure, however, pay attention to the following.

1. Lubricate outer rotor with engine oil.

NOTICE Install rotors with the marks outwards.

2. Install outer rotor into crankcase oil pump bore.

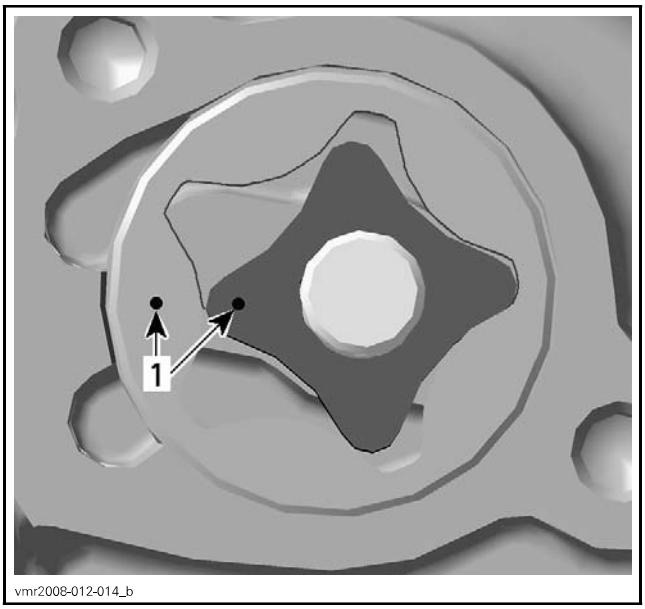

TYPICAL
1. Marks on inner and outer rotor

3. Install needle pin in oil pump shaft.

NOTICE The oil pump shaft is not symmetrical, the longer side must be installed inward.

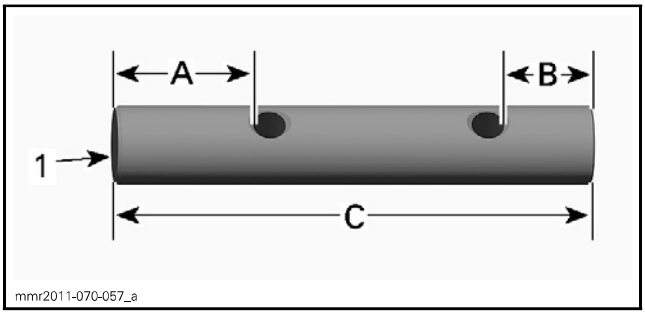

1. Towards engine
A. 16.96 mm (.67 in)
B. 11.43 mm (.45 in)
C. 60.5 mm (2.38 in)

4. Place inner rotor onto the oil pump shaft. Lubricate oil pump shaft and inner rotor with engine oil.
5. Install oil pump assembly into the crankcase.

After installation of the remaining parts, check for smooth operation of the oil pump assembly and axial play of the oil pump shaft.

6. Fill up oil tank and check oil level. Refer to *PERIODIC MAINTENANCE PROCEDURES* subsection.

Start engine and make sure oil pressure is within specifications (refer to *ENGINE OIL PRESSURE* in this subsection).

OIL SUCTION PUMP MODULE

Oil Suction Pump Module Location

The oil suction pump module is located in the cylinder block, behind the magneto cover.

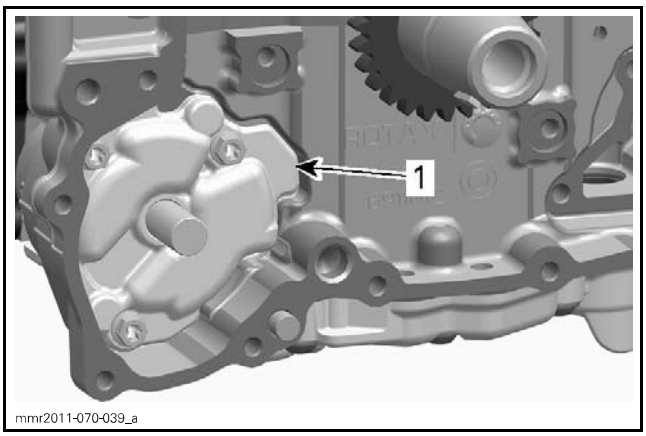

1. Oil suction pump module

Disassembling the Oil Suction Pump Module

1. Remove *OIL PUMP DRIVE GEARS*, see procedure in this subsection.
2. Remove oil pump module cover.

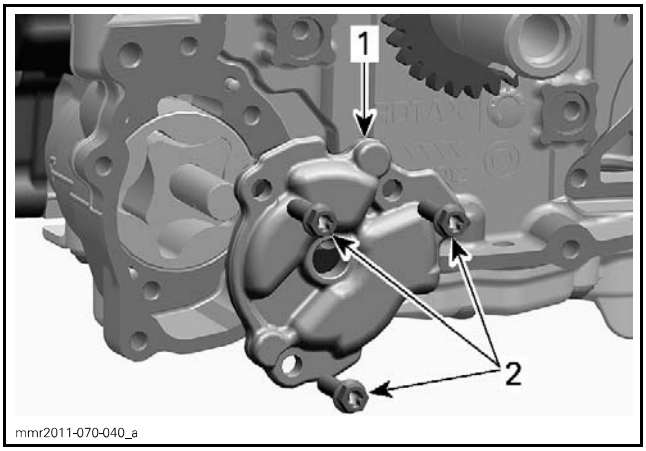

1. Oil pump module cover
2. Retaining screws

3. Disassemble the large oil suction pump as shown.

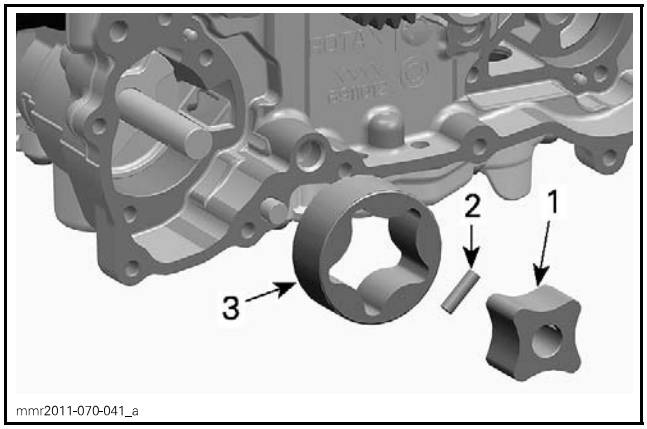

1. Inner rotor
2. Needle pin
3. Outer rotor

4. Disassemble the small oil suction pump as shown.

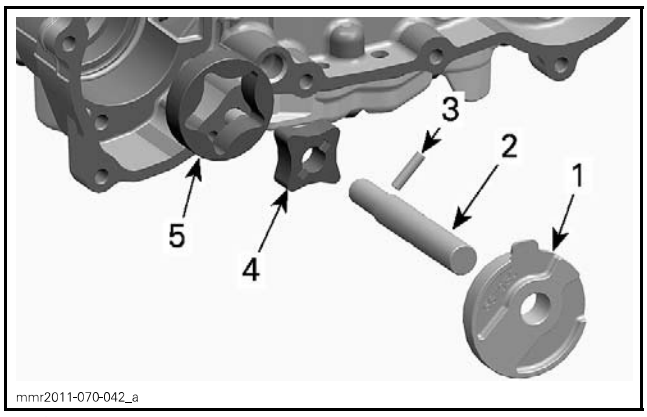

1. Oil pump cover
2. Oil pump shaft
3. Needle pin
4. Inner rotor
5. Outer rotor

5. Remove and discard the oil pump cover O-ring.

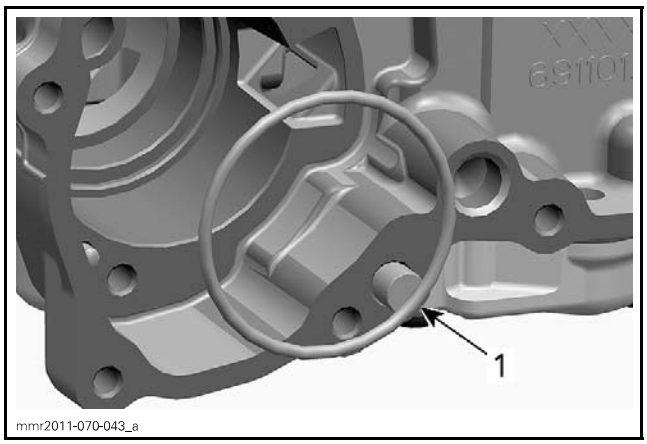

1. Oil pump cover O-ring

Inspecting the Oil Suction Pumps

The inspection of both oil suction pumps is the same as for the oil pressure pump. Refer to *OIL PRESSURE PUMP* in this subsection.

Assembling the Oil Suction Pump Module

For installation, reverse the removal procedure, however, pay attention to the following.

1. Lubricate small oil suction pump outer rotor with engine oil.

NOTICE **When installing the oil pump rotors, make sure both marks are pointing toward the inside of the crankcase.**

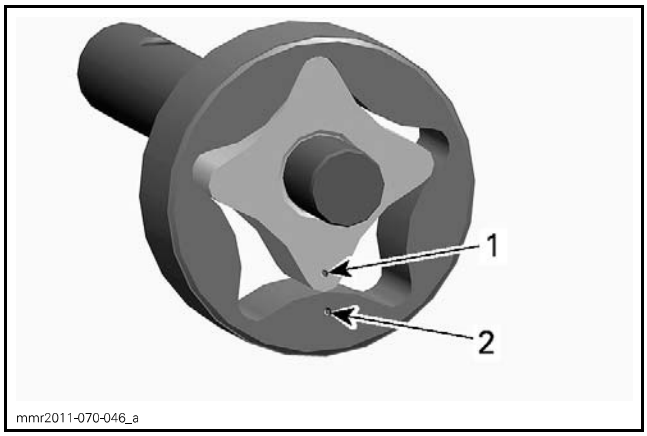

1. *Mark on inner rotor*
2. *Mark on outer rotor*

2. Install small oil suction pump outer rotor into crankcase oil pump bore.

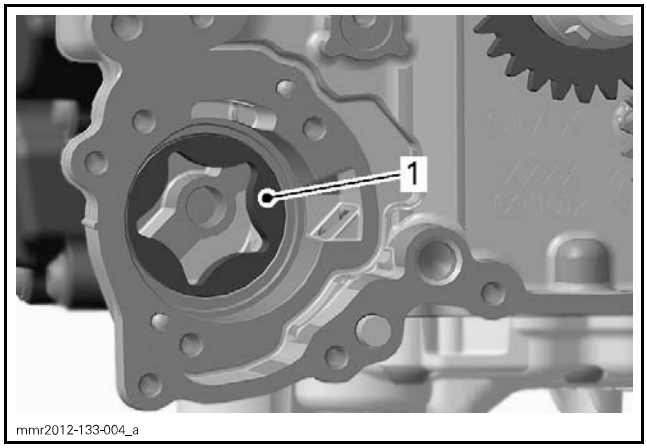

1. *Small oil suction pump outer rotor*

3. Install needle pin in bore of the oil pump shaft and place the small inner rotor on the shaft.

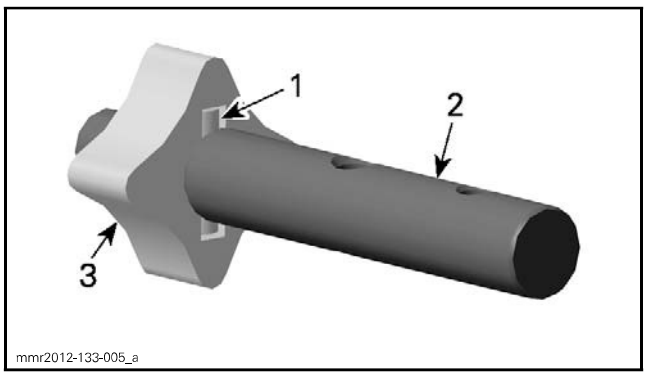

1. *Needle pin*
2. *Oil pump shaft*
3. *Small suction pump inner rotor*

4. Lubricate oil pump shaft and inner rotor with engine oil.
5. Install oil pump shaft assembly into the crankcase.

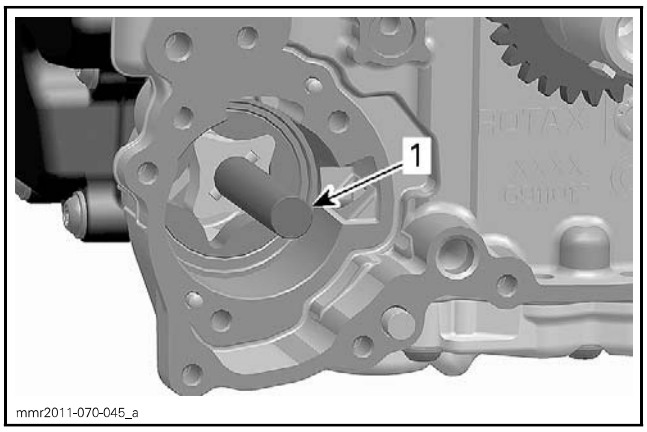

1. *Oil pump shaft with small oil suction pump*

6. Install a NEW oil pump cover O-ring.

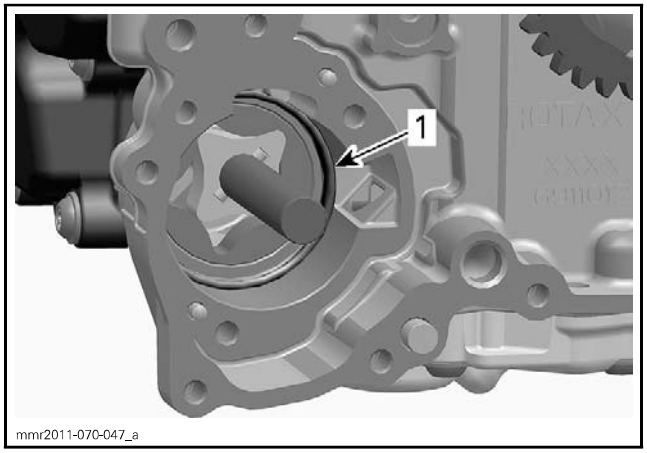

1. *Oil pump cover O-ring*

7. Lubricate both sides of the oil pump cover with engine oil.

8. Align tab of the oil pump cover with the upper recess in the crankcase. Push cover in until a click is heard, indicating the cover is properly installed.

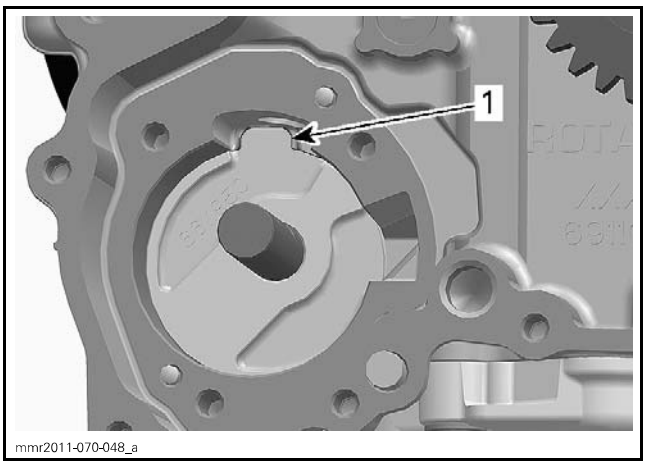

1. Oil pump cover tab properly positioned

9. Install large oil suction pump needle pin.
10. Install large oil suction pump inner rotor and outer rotor with the marks outwards.

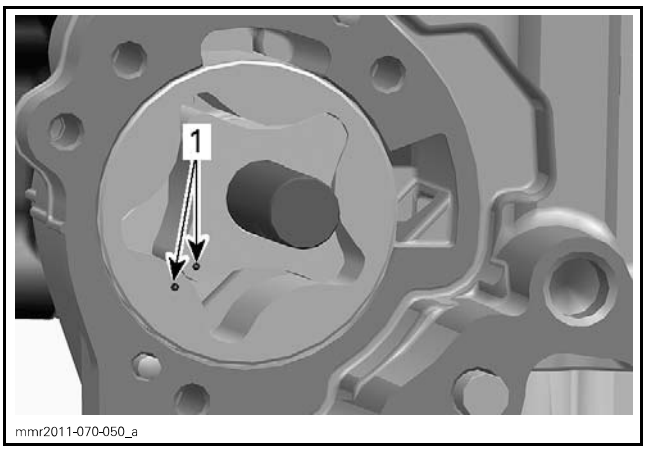

1. Marks on inner and outer rotor

11. Lubricate large oil suction pump parts with engine oil.
12. Install other removed parts.

After installation is complete, check for smooth operation of the oil pump assembly and axial play of the oil pump shaft.

13. Fill up oil tank and check oil level. Refer to *PERIODIC MAINTENANCE PROCEDURES* subsection.

Start engine and make sure oil pressure is within specifications (refer to *ENGINE OIL PRESSURE* in this subsection).

OIL SUMP COVER

Oil Sump Cover Location

The oil sump cover is located on the engine bottom.

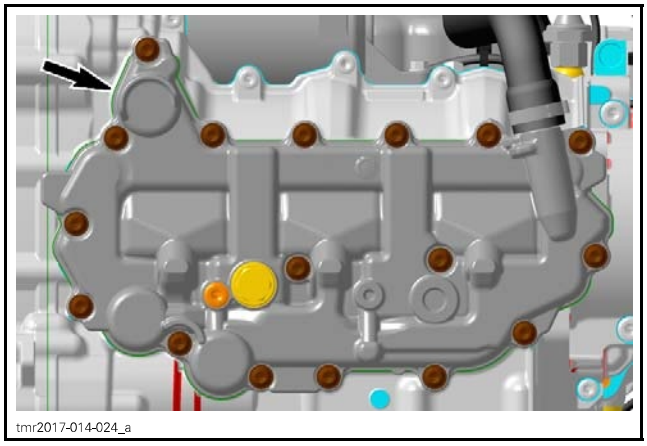

BOTTOM OF ENGINE

Removing the Oil Sump Cover

1. Remove the drive shaft from the engine. Refer to *FRONT DRIVE* subsection.
2. Drain engine oil, refer to *PERIODIC MAINTENANCE PROCEDURES* subsection.

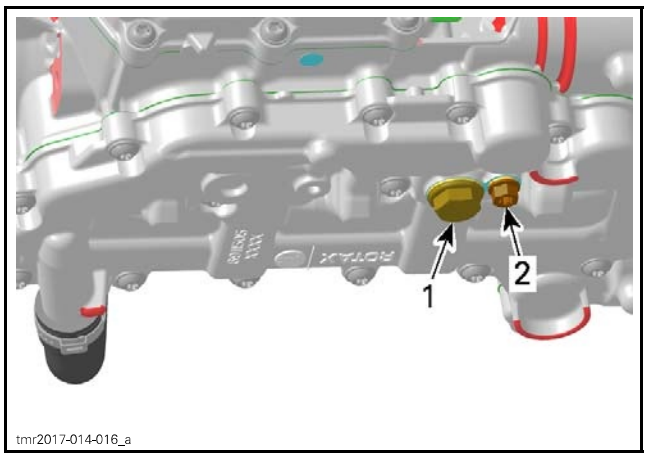

1. Magnetic drain plug
2. Secondary drain plug

3. Remove clamp and turbo oil return hose.

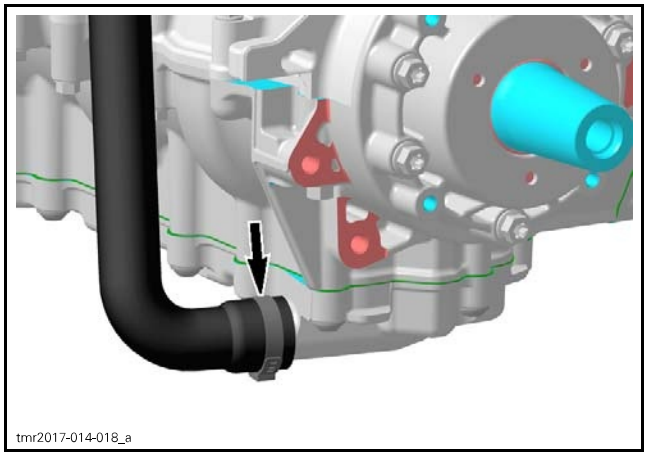

4. Unscrew oil sump cover retaining screws.
5. Remove oil sump cover. Discard gasket.
6. Remove and clean engine oil strainers.

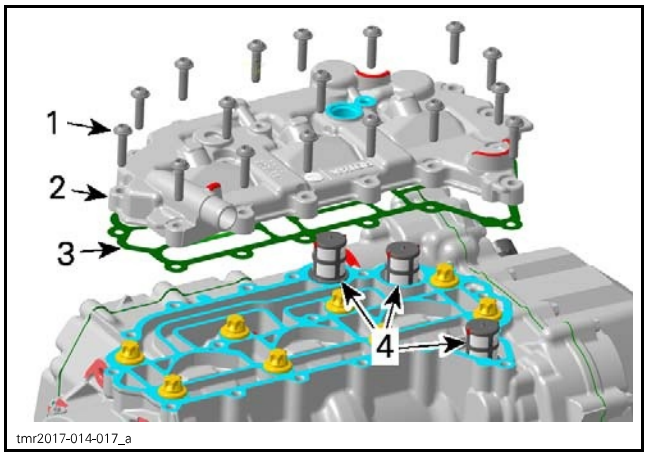

1. Retaining screws
2. Oil sump cover
3. Gasket
4. Engine oil strainers

Inspecting the Oil Sump Cover

Clean oil sump cover and engine oil strainers with a part cleaner, then use an air gun to dry it.

Blow out the oil orifices and check if they are not clogged.

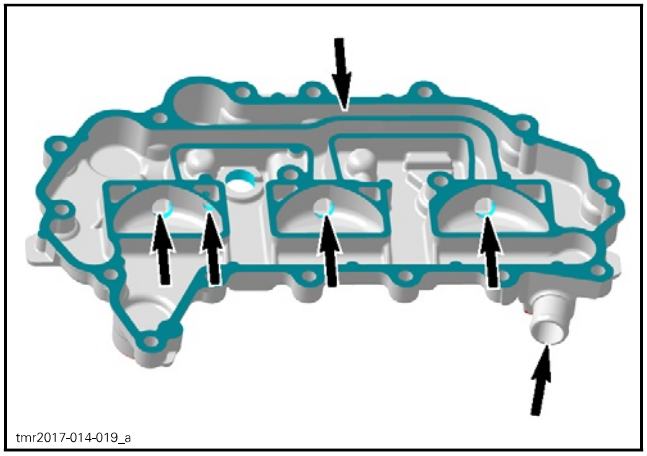

Check oil sump cover for cracks or other damage.

Check oil sump cover for flatness with straight edge.

Replace oil sump cover if necessary.

Check engine oil strainer for damage and change if necessary.

Installing the Oil Sump Cover

1. Install a NEW oil sump cover gasket.
2. Install the strainers as shown.

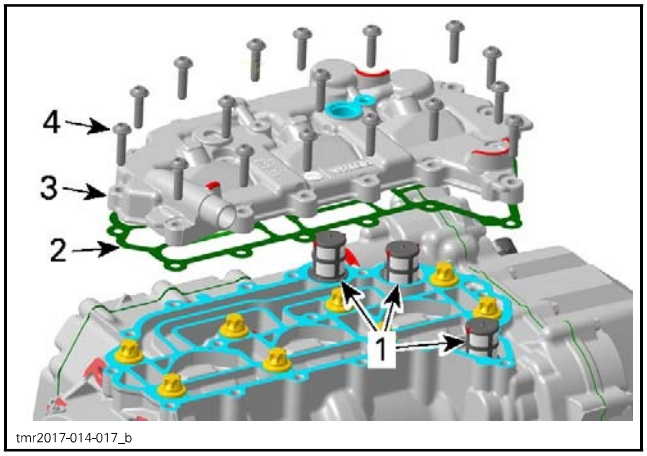

1. Oil strainers
2. Gasket
3. Oil sump cover
4. Retaining screws

3. Install the oil sump cover on the engine, then tighten screws in two steps as follows:
   3.1 Tighten the following screws to the specified torque and sequence.

TIGHTENING TORQUE		
Oil sump cover screws	STEP A	5 N•m ± 0.6 N•m (44 lbf•**in** ± 5 lbf•**in**)

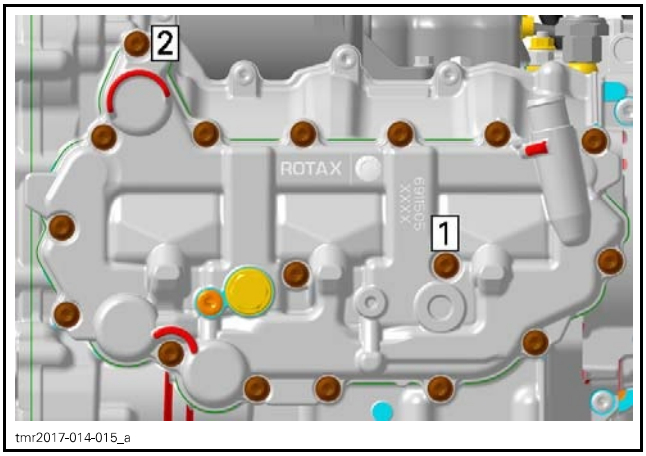

TIGHTENING SEQUENCE STEP A

3.2 Tighten the following screws to the specified torque and sequence.

TIGHTENING TORQUE		
Oil sump cover screws	STEP B	9 N•m ± 1 N•m (80 lbf•**in** ± 9 lbf•**in**)

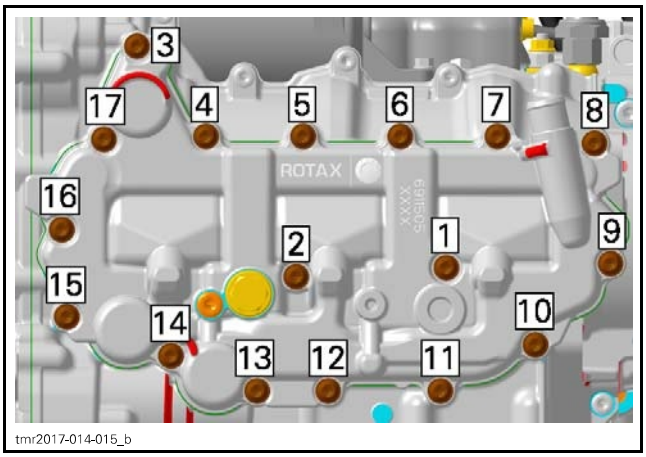

TIGHTENING SEQUENCE STEP B

4. Reinstall oil drain plugs using **NEW** sealing washers.

TIGHTENING TORQUE	
Secondary drain plug	15 N•m ± 2 N•m (133 lbf•**in** ± 18 lbf•**in**)
Magnetic drain plug	30 N•m ± 3 N•m (22 lbf•ft ± 2 lbf•ft)

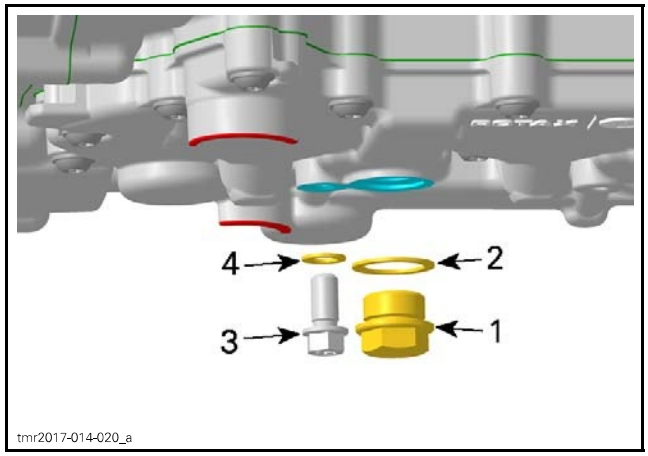

1. *Magnetic drain plug*
2. *Sealing washer*
3. *Secondary drain plug*
4. *Sealing washer*

5. Reinstall oil return hose and clamp.
6. Install engine in vehicle. Refer to *ENGINE REMOVAL AND INSTALLATION* subsection.
7. Fill up oil tank and check oil level. Refer to *PERIODIC MAINTENANCE PROCEDURES* subsection.

OIL NOZZLES

Oil Nozzle Location

The oil nozzles are located inside the cylinder block upper half.

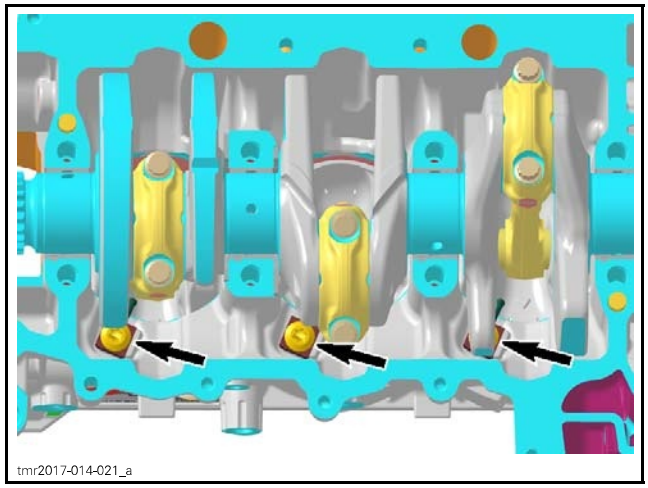

NOTICE If the engine has to be dismantled within the scope of repair work, take this opportunity to clean the oil nozzles.

Removing the Oil Nozzle

Separate cylinder block halves. Refer to *CYLINDER BLOCK* subsection.

Remove:
– Banjo bolt (discard it)
– Oil nozzle.

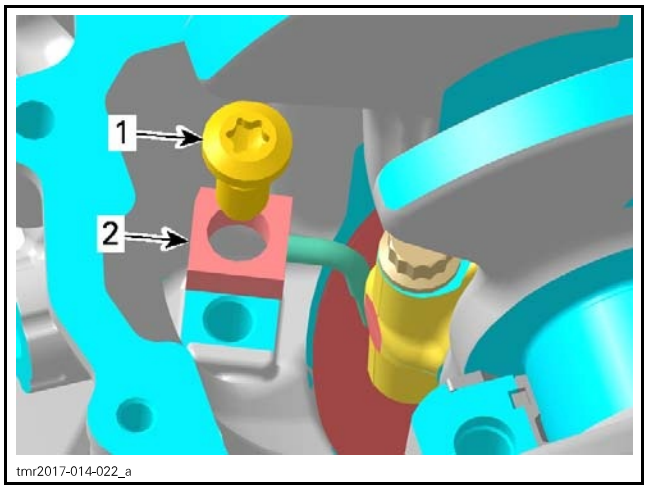

1. Banjo bolt (discard it)
2. Oil nozzle

Cleaning and Inspecting the Oil Nozzle

Clean oil nozzle with a parts cleaner, then use an air gun and dry the parts.

If the oil nozzles are damaged or bent during work in the cylinder block, they must be replaced immediately.

Check if ball inside Banjo bolt moves freely.

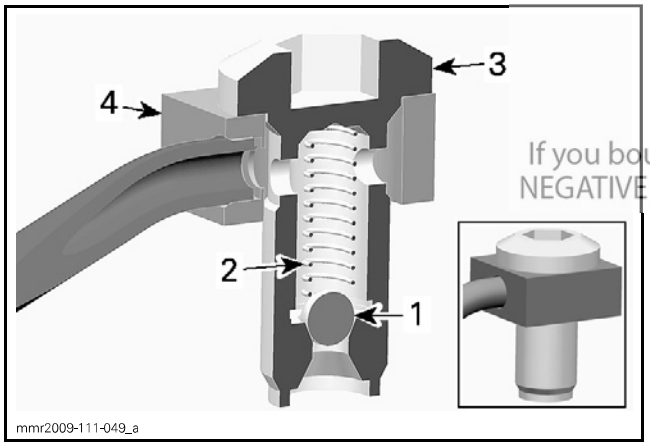

1. Ball
2. Spring
3. Banjo bolt
4. Oil nozzle

Installing the Oil Nozzle

NOTICE At assembly make sure the contact surface of the oil nozzles are well fitted onto the cylinder block. If this is not ensured, the oil spray direction will change, causing potential engine damage.

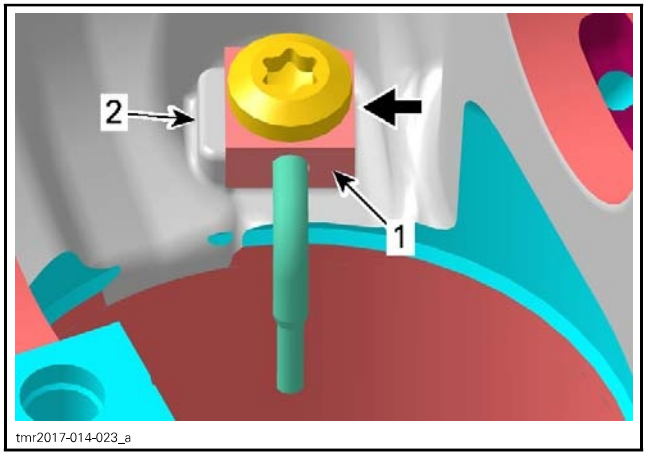

1. Oil nozzle
2. Stop collar

Tighten banjo bolts to specification.

TIGHTENING TORQUE	
Banjo bolt	19 N•m ± 2 N•m (168 lbf•**in** ± 18 lbf•**in**)

Midwest Manuals
Green Manuals
Paperless Manuals For a Better Tomorrow
If you bought this manual from any other seller please leave them NEGATIVE feedback and notify me at bestshopmanuals@gmail.com

COOLING SYSTEM - ENGINE

SERVICE TOOLS

Description	Part Number	Page
HANDLE	420 877 650	6
OIL SEAL PUSHER	529 036 210	6
ROTARY SEAL INSTALLER	529 036 211	6–7

SERVICE PRODUCTS

Description	Part Number	Page
ISOFLEX GREASE TOPAS NB 52	293 550 021	6

ENGINE COMPONENTS

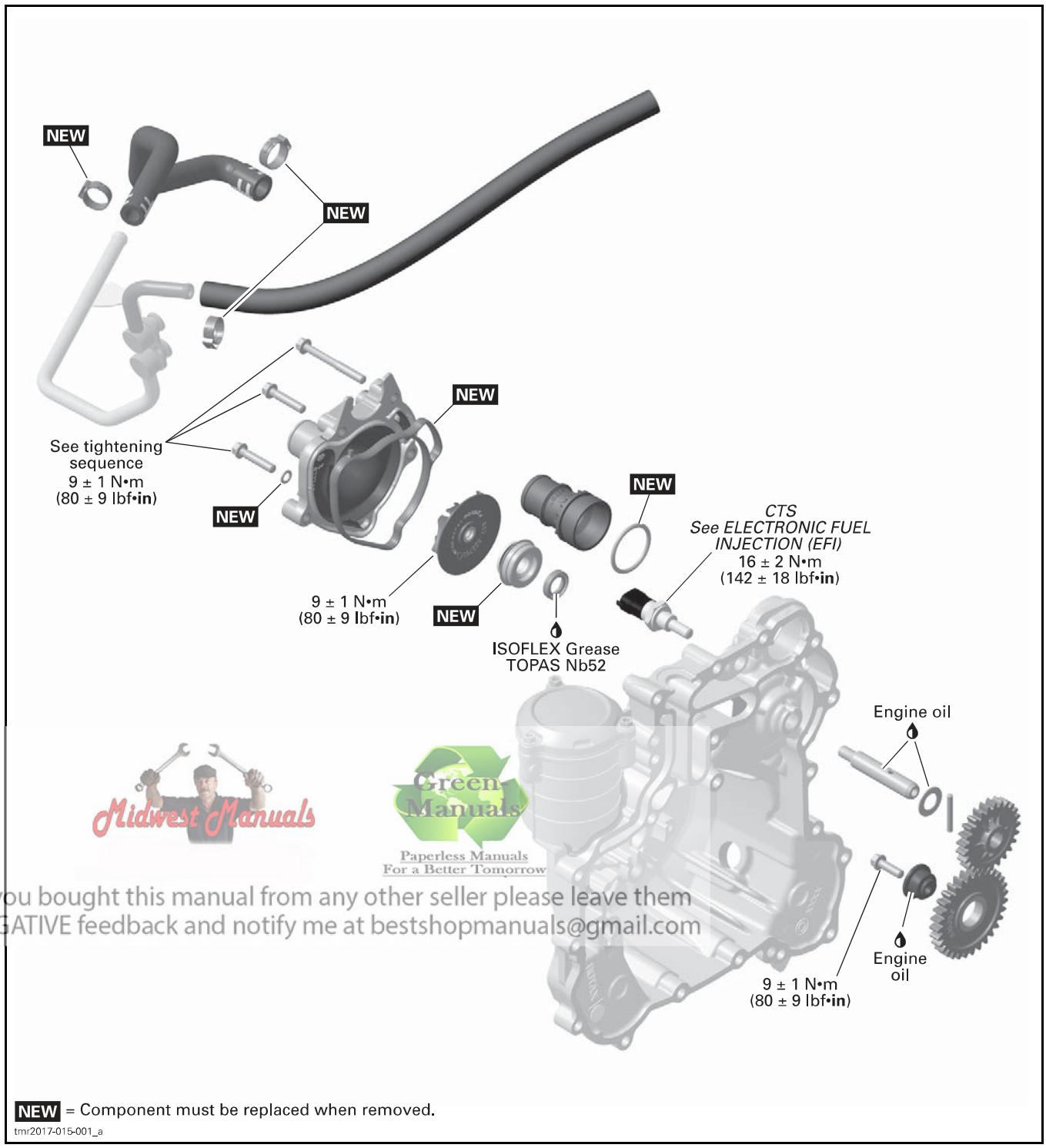

NEW = Component must be replaced when removed.

tmr2017-015-001_a

Midwest Manuals
Green Manuals
Paperless Manuals
For a Better Tomorrow
If you bought this manual from any other seller please leave them
NEGATIVE feedback and notify me at bestshopmanuals@gmail.com

GENERAL

For a better understanding, some illustrations were taken with engine out of vehicle.

NOTE: It is a good practice to check for fault codes using B.U.D.S. software as a first troubleshooting step. Refer to the *DIAGNOSTIC AND FAULT CODES* subsection.

During assembly/installation, use the torque values and service products as shown in the exploded views.

Clean threads before applying a threadlocker. Refer to *SELF-LOCKING FASTENERS* and *LOCTITE APPLICATION* at the beginning of this manual for complete procedure.

⚠ WARNING

To avoid potential burns, do not remove the coolant tank cap or loosen the cooling drain plug if the engine is hot.

⚠ WARNING

Torque wrench tightening specifications must strictly be adhered to.
Locking devices when removed (e.g.: locking tabs, elastic stop nuts, cotter pin, etc.) must be replaced with new ones.

NOTICE **Hoses, cables and locking ties removed during a procedure must be reinstalled as per factory standards.**

INSPECTION

TROUBLESHOOTING

The following is provided to help in diagnosing the probable source of troubles. It is a guideline and should not be assumed to show all causes for all problems.

Always check for fault codes. If a fault code is detected, service the fault code first.

ENGINE OVERHEATING

1. **Low coolant level.**
   - *Refill and check for leaks (coolant leaking out of leak indicator hole, hoses or clamps missing or defective, or cylinder head gaskets leaks). Repair or replace.*
2. **Dirty heat exchanger.**
   - *Clean heat exchanger fins. Replace heat exchanger as required.*
3. **Air in cooling system.**
   - *Refill and bleed cooling system.*
4. **Defective thermostat (does not open when engine is warm up).**
   - *Replace thermostat.*
5. **Defective water pump.**
   - *Inspect and replace defective components.*
6. **Coolant temperature sensor defective.**
   - *Check and replace.*
7. **Wrong coolant concentration.**
   - *Check and adjust coolant concentration according to BRP's recommendations or replace coolant.*
8. **Defective coolant reservoir cap.**
   - *Replace cap.*
9. **Defective cooling fan.**
   - *Check cooling fan motor operation.*
   - *Check fuse and relay of cooling fan motor.*
   - *Check wiring harness of cooling fan motor.*
10. **Snow guard is too high.**
    - *Check and adjust rear suspension.*

PROCEDURES

WATER PUMP

Water Pump Location

The water pump is located on engine MAG side.

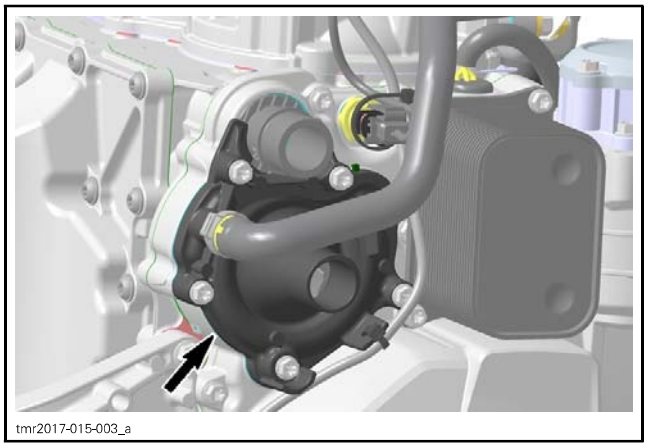

tmr2017-015-003_a

Water Pump Access

1. Remove RH rear wheel and shock absorber.
2. Remove the coolant hose cover.

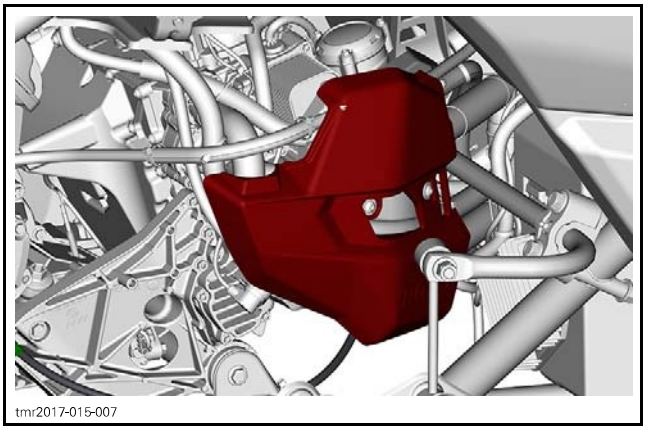
tmr2017-015-007

Removing the Water Pump Housing

1. Drain engine coolant. Refer to *PERIODIC MAINTENANCE PROCEDURES* subsection.
2. Remove locking ties that secure hoses on the support and move hoses aside.

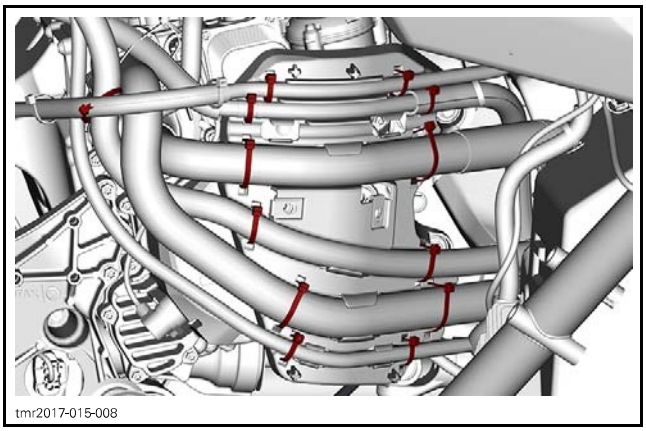
tmr2017-015-008

3. Disconnect outlet hose from thermostat housing.
4. Disconnect inlet hose from water pump housing.

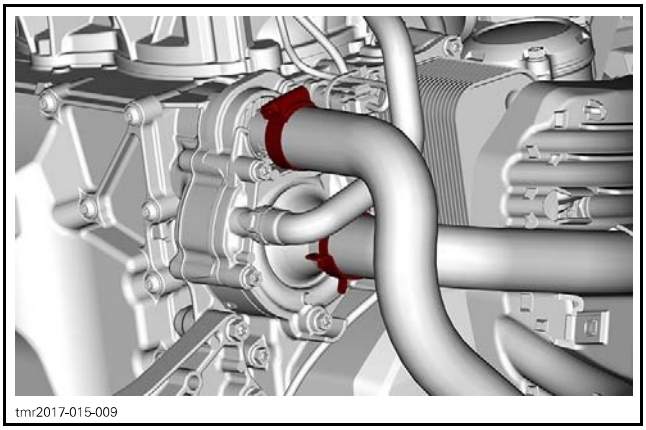
tmr2017-015-009

5. Disconnect supercharger inlet hose from water pump housing. Discard clamp.
6. Remove both locking ties securing CPS wire.

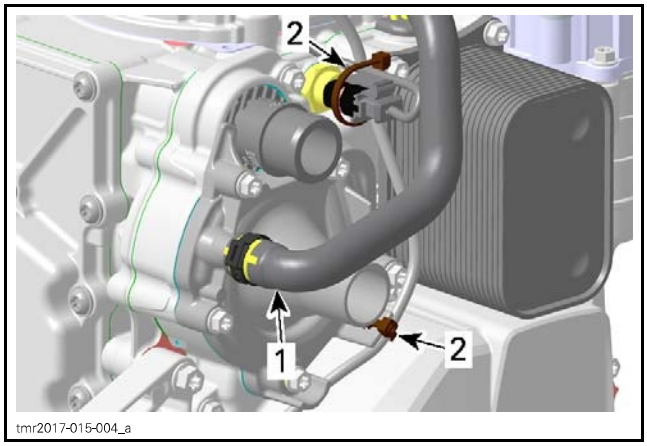

tmr2017-015-004_a

1. *Supercharger inlet hose*
2. *Locking ties*

7. Remove retaining screws of water pump housing.
8. Discard sealing washer.
9. Remove water pump housing with thermostat cover from magneto cover.

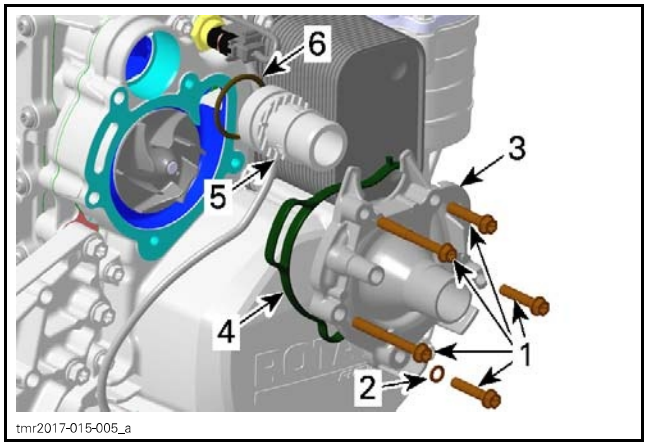

tmr2017-015-005_a

1. *Retaining screws*
2. *Sealing washer*
3. *Housing*
4. *Gasket*
5. *Thermostat cover*
6. *O-ring*

NOTE: Use shop rags to catch any spilled engine coolant.

Disassembling the Water Pump

1. Unscrew impeller counterclockwise using appropriate pliers.

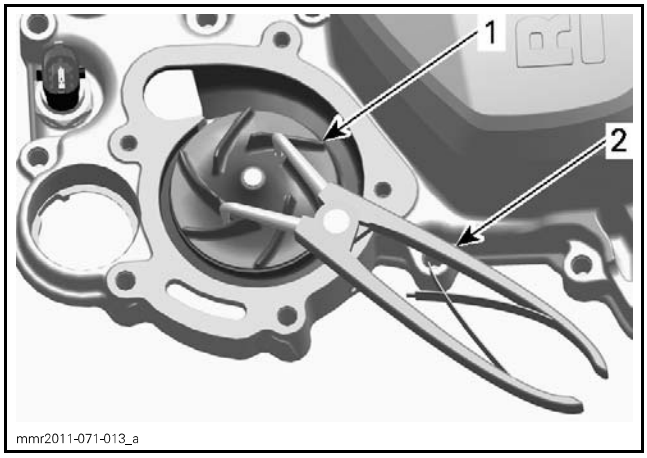

1. *Impeller*
2. *Pliers*

2. Remove magneto cover. Refer to *MAGNETO AND STARTER* subsection.
3. Remove the following components from magneto cover:
   – Water pump gear
   – Needle pin
   – Thrust washer.

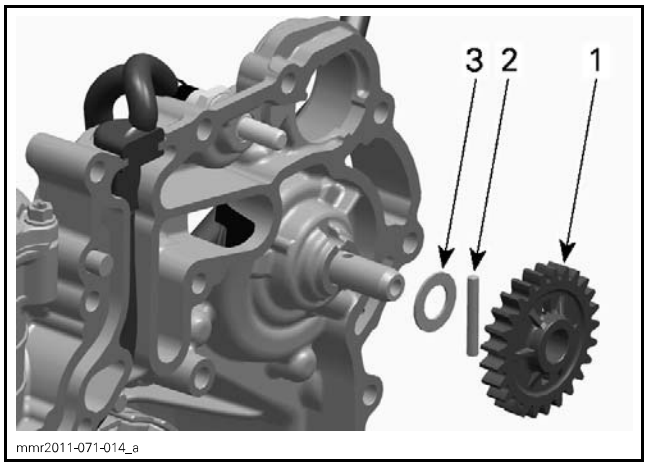

1. *Water pump gear*
2. *Needle pin*
3. *Thrust washer*

4. Remove water pump shaft using a plastic mallet.

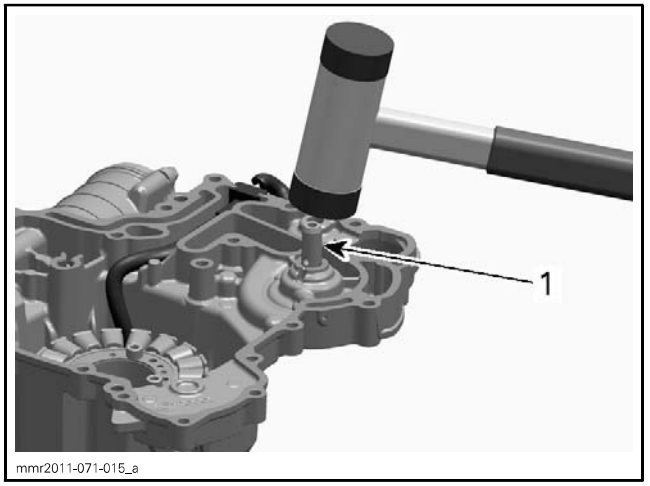

1. *Water pump shaft*

5. Remove the following components from magneto cover:
   – Oil seal
   – Remaining parts of rotary seal.

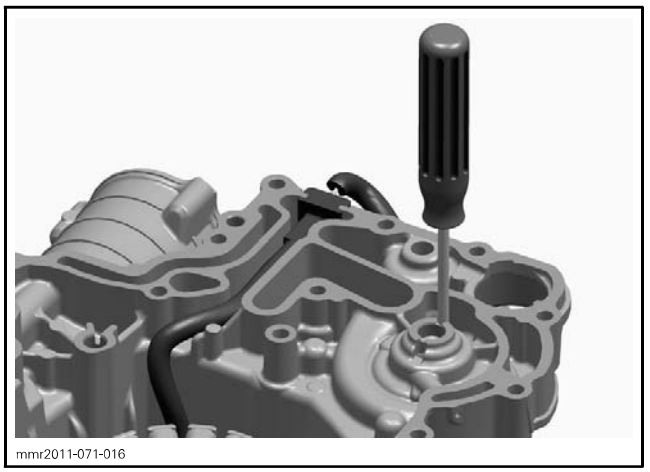

NOTICE **Be careful not to damage the surface of the rotary seal bore in the magneto cover.**

6. Separate rotary seal from water pump shaft.

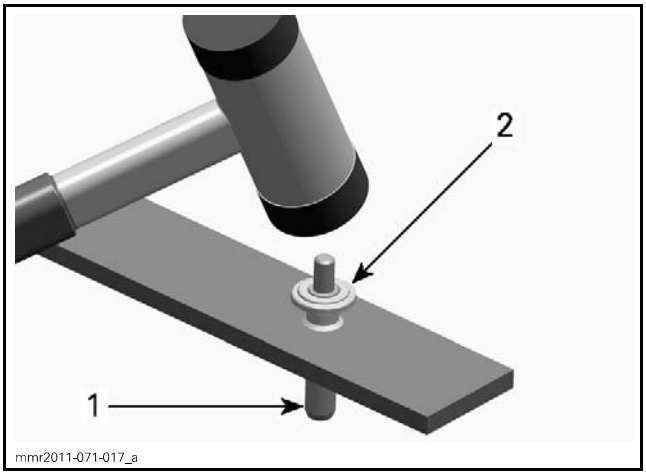

1. Water pump shaft.
2. Rotary seal

Inspecting the Water Pump

Check area of water pump housing for cracks or other visible damage.

Check water pump gear for wear or broken teeth.

Check if housing gasket is brittle, hard or damaged.

Check water pump shaft for visible damage.

Replace parts if necessary.

Assembling the Water Pump

NOTE: Always replace oil seal and rotary seal at the same time.

1. Clean rotary seal surface from old sealant.

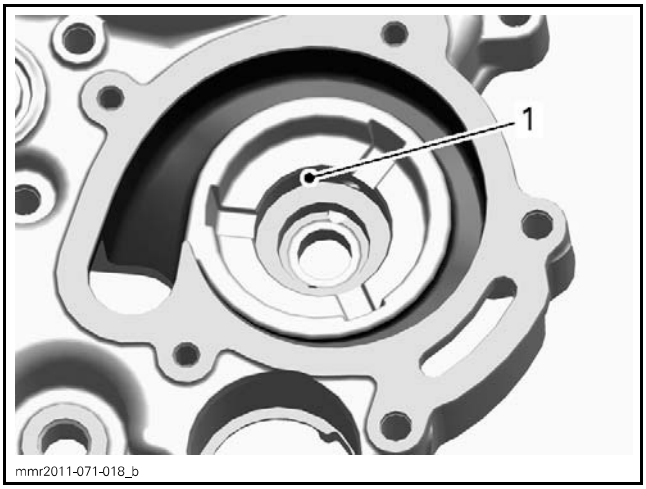

1. Clean surface

2. Apply engine oil on the press fit area of oil seal.

NOTICE **Never use engine oil on the press fit area of the rotary seal.**

3. Install new oil seal in magneto cover.

REQUIRED TOOL	
OIL SEAL PUSHER (P/N 529 036 210)	
HANDLE (P/N 420 877 650)	

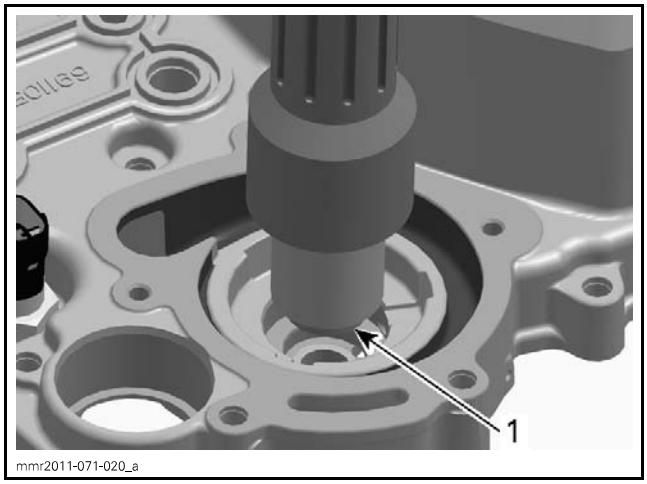

1. Oil seal

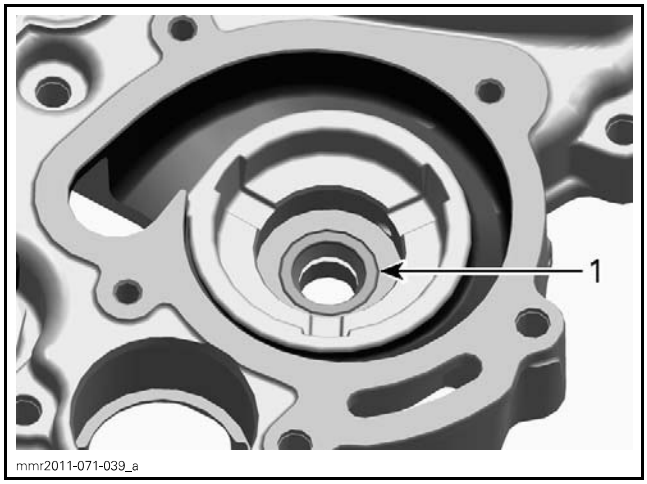

1. Oil seal correctly installed

4. Lubricate sealing lip of the oil seal.

OIL SEAL	
Service product	ISOFLEX GREASE TOPAS NB 52 (P/N 293 550 021)

5. Install new rotary seal on magneto cover using a press.

NOTE: Prior to installing, ensure that sealing lip of rotary seal is not damaged.

REQUIRED TOOL	
Press	
ROTARY SEAL INSTALLER (P/N 529 036 211)	

NOTICE Never use a hammer for rotary seal installation. Only use a press to avoid damaging the ceramic component.

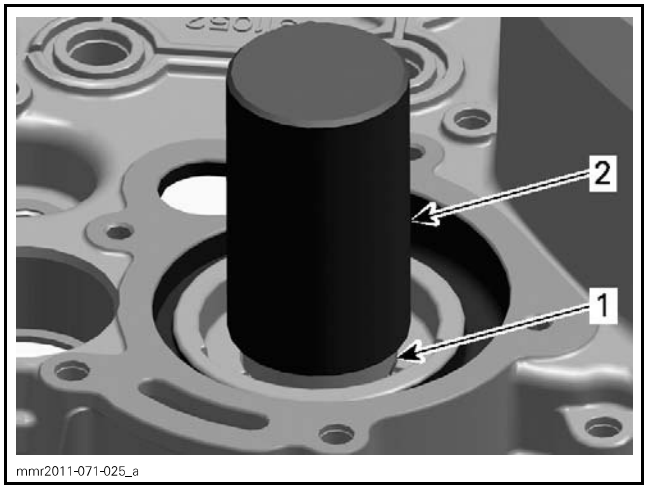

1. *Rotary seal*
2. *Rotary seal installer*

6. Assemble the following components onto water pump shaft.
   – Needle pin
   – Thrust washer.

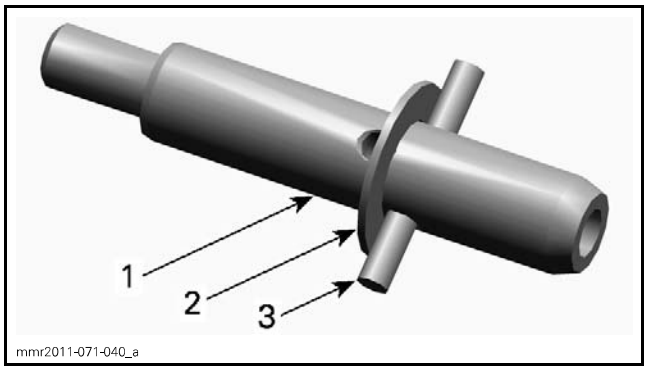

1. *Water pump shaft*
2. *Thrust washer*
3. *Needle pin*

7. Slide water pump shaft into rotary seal using a press.

NOTE: To avoid damaging the rotary seal and to achieve the proper preload support the rotary seal with the ROTARY SEAL INSTALLER (P/N 529 036 211).

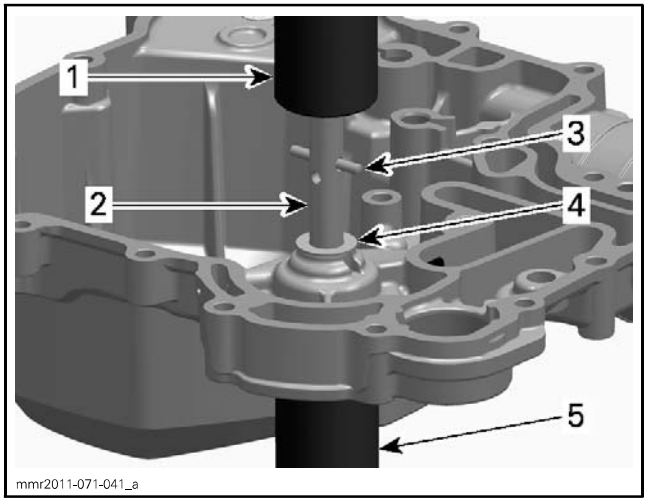

1. *Press*
2. *Water pump shaft*
3. *Needle pin*
4. *Thrust washer*
5. *Rotary seal installer*

8. Carefully press water pump shaft until needle pin touches thrust washer.

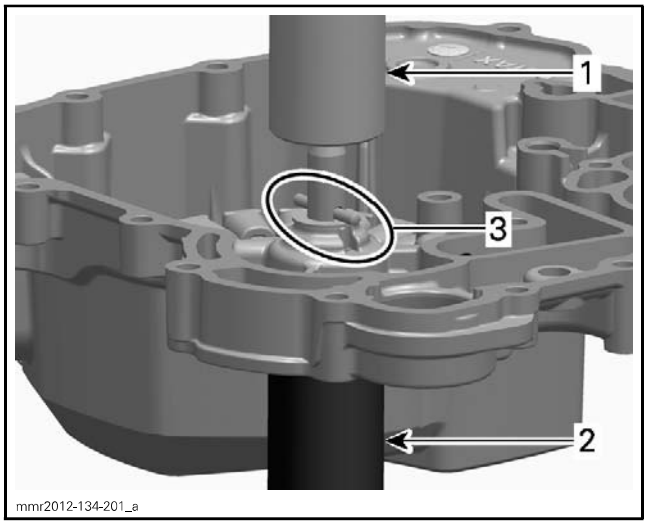

1. *Press*
2. *Rotary seal installer*
3. *Needle pin touches thrust washer*

NOTICE Never use a hammer to install water pump shaft into rotary seal.

NOTE: After installation, water pump shaft must rotate freely.

9. Screw impeller clockwise using appropriate pliers.

NOTICE Be careful not to damage impeller wings during its installation.

10. Install magneto cover. Refer to *MAGNETO AND STARTER* subsection.

Installing the Water Pump Housing

The installation is the reverse of the removal procedure. However, pay attention to the following.

NOTICE **To prevent leaking, take care that the new gasket is exactly in groove when you reinstall the water pump housing.**

Install the thermostat cover into magneto cover.

Install a new sealing washer on drain screw.

Tighten water pump housing retaining screws to specification as per the following procedure.

TIGHTENING TORQUE	
Water pump housing retaining screws	9 N•m ± 1 N•m (80 lbf•**in** ± 9 lbf•**in**)

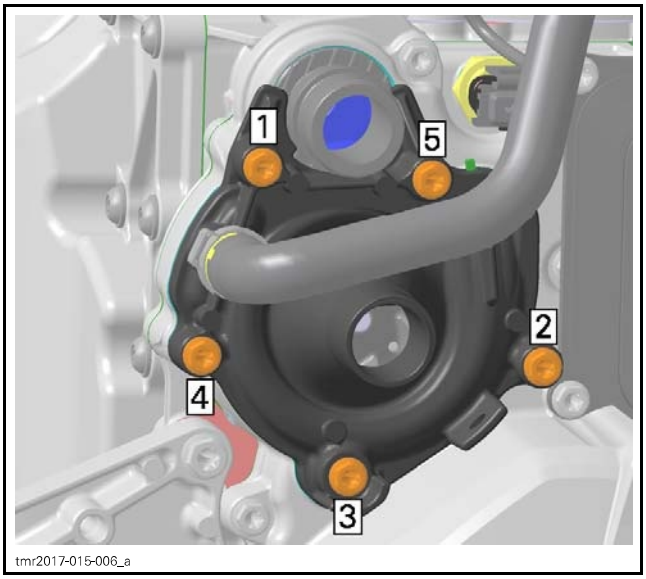

TIGHTENING SEQUENCE

Tighten hose clamps to specification.

TIGHTENING TORQUE	
Coolant hose clamps	5.5 N•m ± 0.5 N•m (49 lbf•**in** ± 4 lbf•**in**)

WATER PUMP DRIVE GEAR

Water Pump Drive Gear Location

The water pump drive gearis located behind the magneto cover.

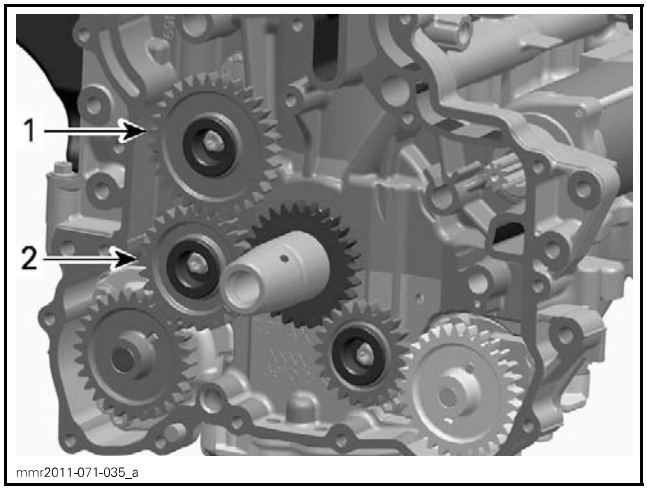

1. *Water pump drive gear 31 T*
2. *Intermediate gear, refer to LUBRICATION SYSTEM*

Water Pump Drive Gear Access

Refer to *MAGNETO AND STARTER* subsection and remove:

– Magneto cover
– Magneto flywheel.

Removing the Water Pump Drive Gear

1. Remove screw securing water pump drive gear.
2. Remove bearing sleeve.
3. Slide off water pump drive gear.

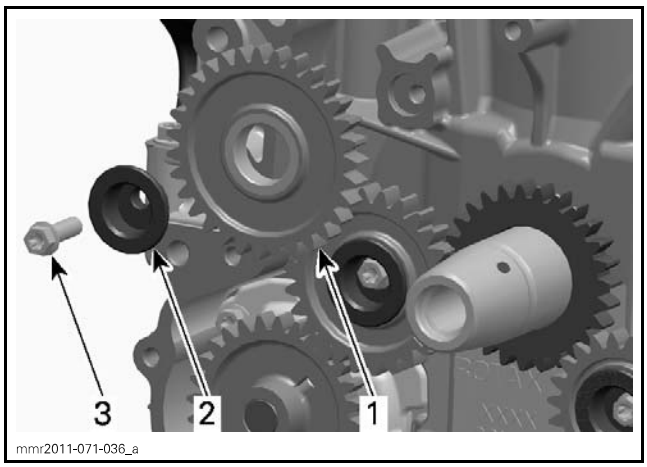

1. *Water pump drive gear 31 T*
2. *Bearing sleeve*
3. *M6 x 20 screw*

Inspecting the Water Pump Drive Gear

Inspect gear for wear or other damage.

Replace gear if necessary.

Installing the Water Pump Drive Gear

The installation is the reverse of the removal procedure. However, pay attention to the following.

Apply engine oil on bearing sleeve.

Tighten water pump drive gear to specification.

TIGHTENING TORQUE	
Water pump drive gear retaining screw	9 N•m ± 1 N•m (80 lbf•**in** ± 9 lbf•**in**)

COOLING SYSTEM - VEHICLE

SERVICE TOOLS

Description	Part Number	Page
LARGE HOSE PINCHER	529 032 500	4

RADIATOR

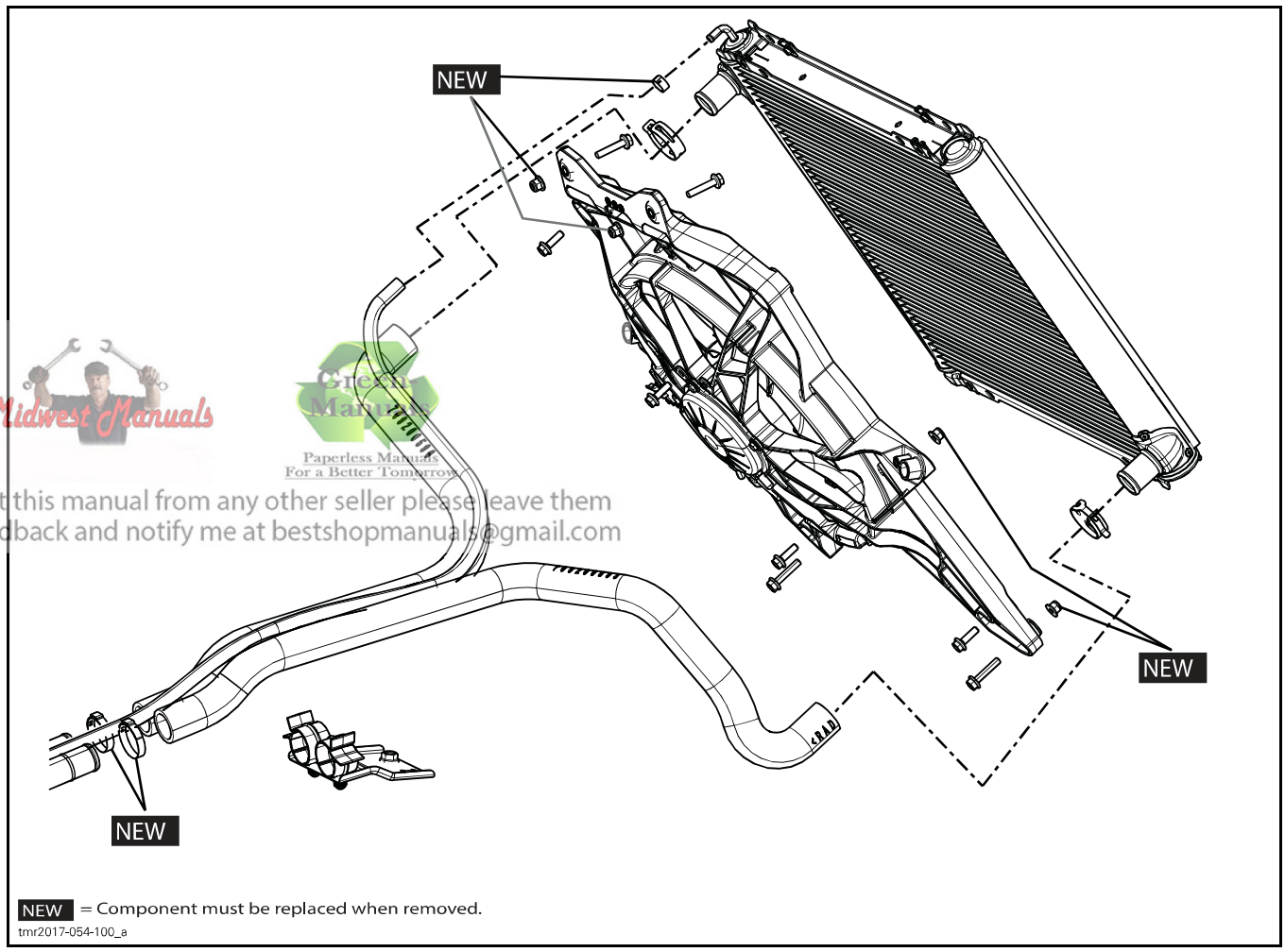

NEW = Component must be replaced when removed.

tmr2017-054-100_a

Midwest Manuals
Green Manuals
Paperless Manuals
For a Better Tomorrow
If you bought this manual from any other seller please leave them
NEGATIVE feedback and notify me at bestshopmanuals@gmail.com

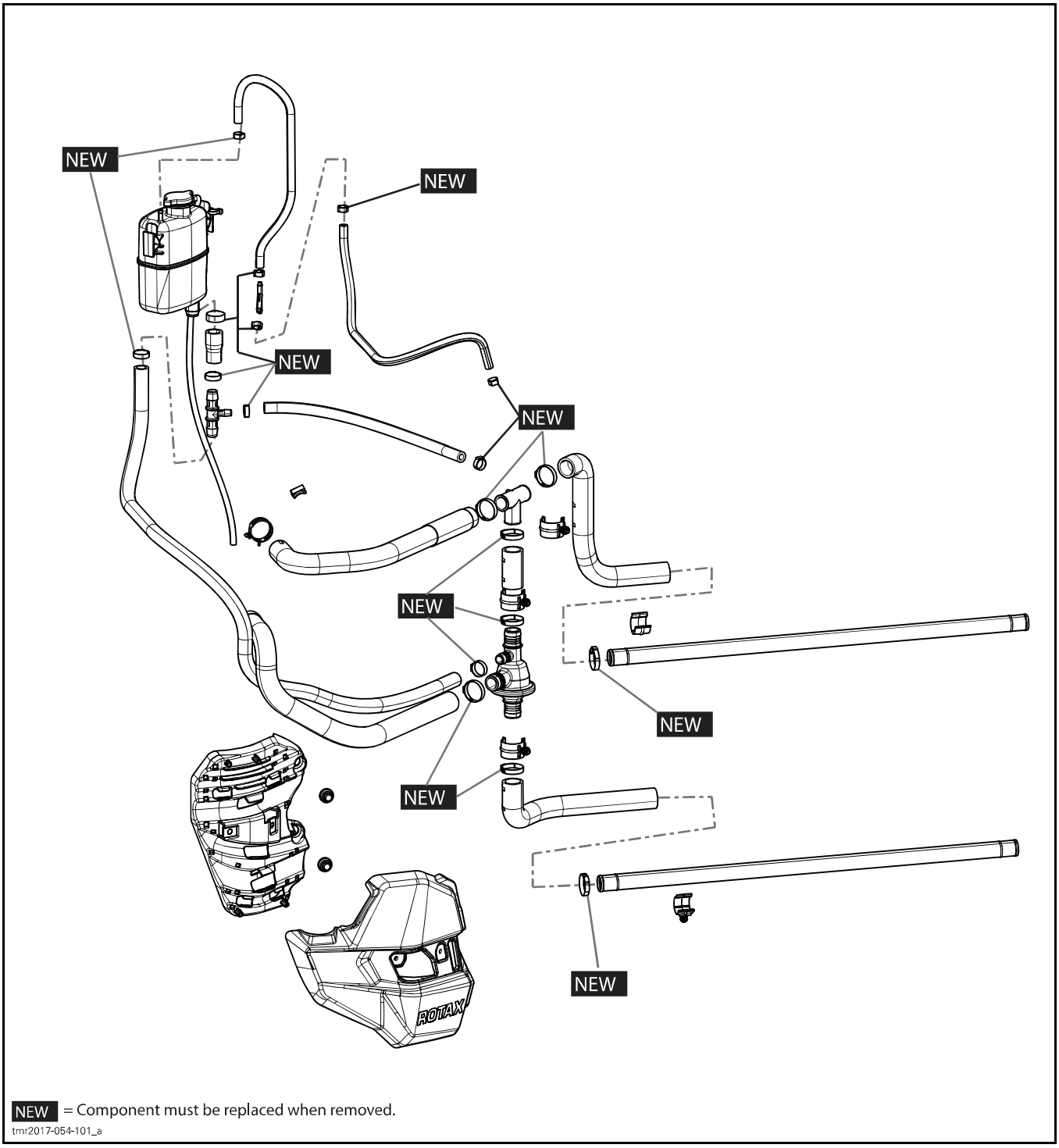

NEW = Component must be replaced when removed.

tmr2017-054-101_a

GENERAL

NOTICE Never start engine without coolant. Some engine parts such as the rotary seal on the water pump shaft can be damaged.

PROCEDURES

THERMOSTAT

The thermostat is a single action type.

Thermostat Location

The thermostat is mounted in-line in the cooling system circuit.

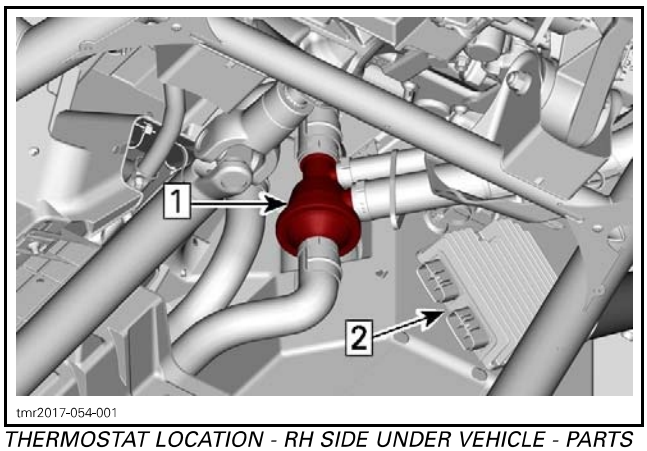

THERMOSTAT LOCATION - RH SIDE UNDER VEHICLE - PARTS REMOVED FOR CLARITY
1. *In-line thermostat*
2. *Voltage rectifier*

NOTE: You can acces the thermostat housing from either under the vehicle by removing the skid plate or by the console by removing the side panel.

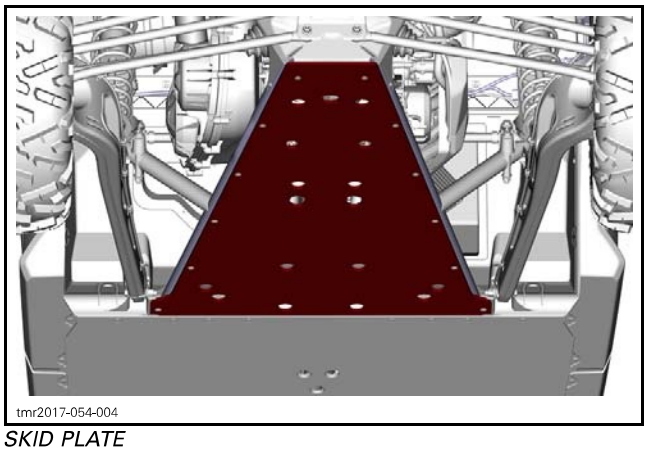

SKID PLATE

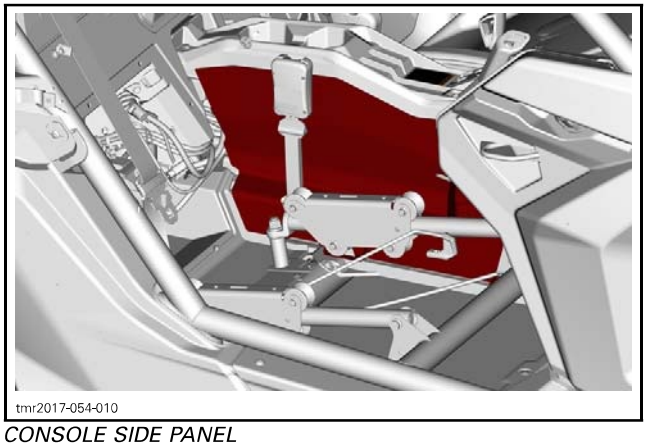

CONSOLE SIDE PANEL

Removing the Thermostat

1. Drain cooling system, refer to *PERIODIC MAINTENANCE PROCEDURES* subsection.
2. Remove Oetiker clamps that secure hoses to thermostat.

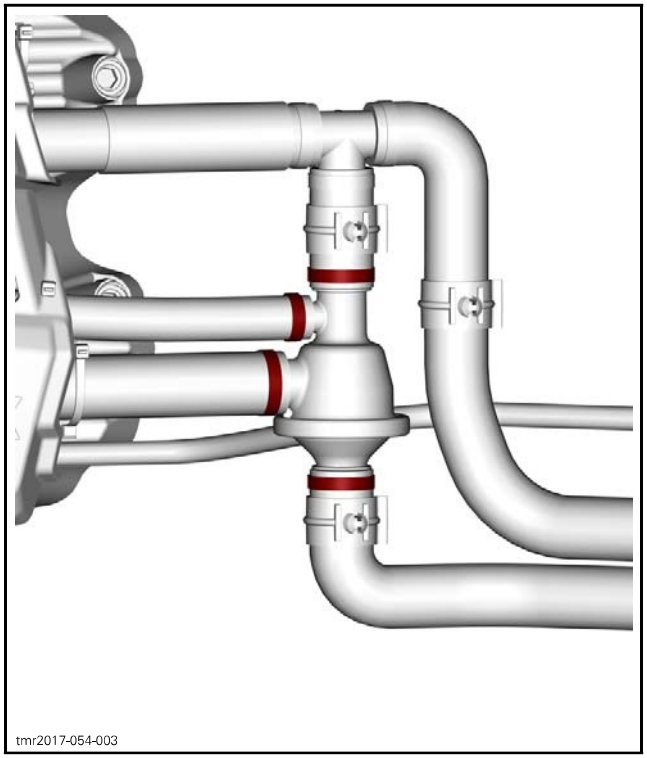

3. Remove thermostat.

Testing the Thermostat

To check thermostat, put it in water and heat the water.

THERMOSTAT OPENING TEMPERATURE	
STARTS TO OPEN	FULLY OPEN
65°C (149°F)	88°C (190°F)

Replace thermostat if it does not begin to open at specified temperature.

Check if gasket is brittle, hard or damaged. If so, replace gasket.

Installing the Thermostat

Reverse removal procedures.

Refill cooling system.

Bleed cooling system, refer to *PERIODIC MAINTENANCE PROCEDURES* subsection.

NOTICE **The cooling system must be bled as specified.**

Check for coolant leaks.

RADIATOR

Inspecting the Radiator

Check radiator fins for clogging or damage.

Remove insects, mud or other obstructions with compressed air or low pressure water.

Removing the Radiator

1. Remove front body module, refer to *BODY* subsection.

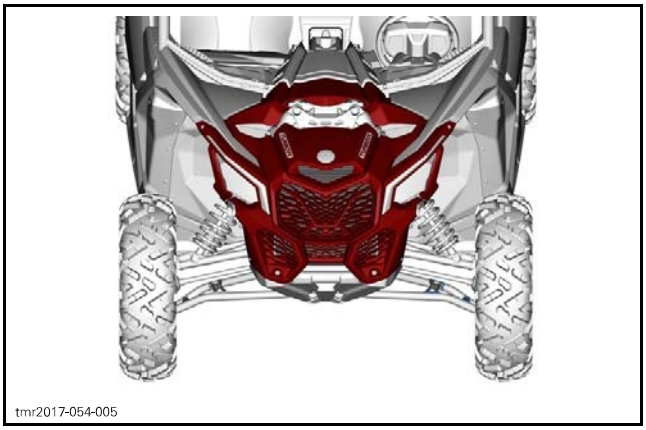

2. Install hose pinchers on both radiator hoses.

REQUIRED TOOL	
LARGE HOSE PINCHER (P/N 529 032 500)	

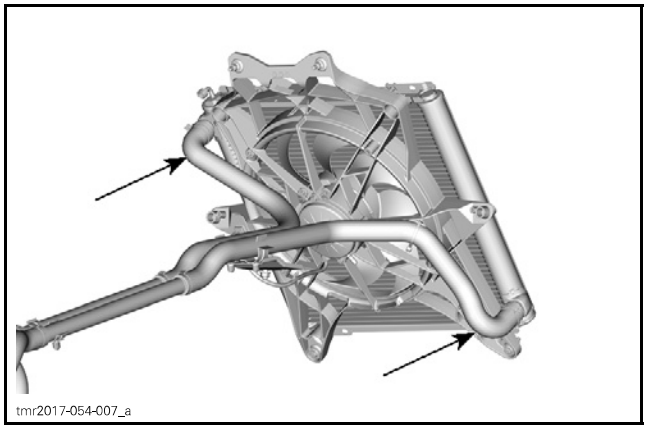

INSTALL HOSE PINCHERS

3. Remove radiator vent line.
4. Remove screws from the cooling fan.

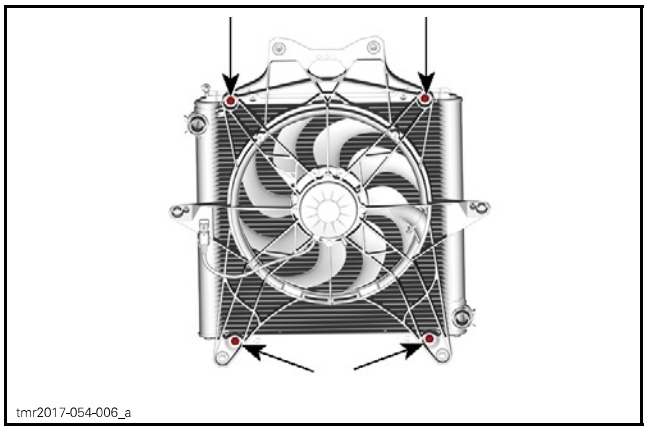

5. Remove the radiator.

Installing the Radiator

1. For installation, reverse the removal procedure. Ensure new clamps are installed for the 2 radiator hoses and for the vent line as well.
2. Fill radiator with the recommended coolant. Refer to *PERIODIC MAINTENANCE PROCEDURES* subsection.
3. Bleed the cooling system, refer to *PERIODIC MAINTENANCE PROCEDURES* subsection.

NOTICE **The cooling system must be bled as specified.**

4. Check for coolant leaks from radiator and hoses.

RADIATOR COOLING FAN RELAY (R1)

Relay Operation Test (Radiator Cooling Fan)

The easiest way to check the relay is to remove it and temporarily substitute with the accessory relay. If the radiator cooling fan operates, replace the relay.

RADIATOR COOLING FAN

Radiator Cooling Fan Operation

The ECM controls the radiator cooling fan via the inputs of the coolant temperature sensor (CTS). Refer to the following table.

ENGINE TEMPERATURE	COOLING FAN	CHECK ENGINE LIGHT	MESSAGE IN MULTIFUNCTION GAUGE	LIMP HOME MODE
96°C (205°F)	Turns ON	—	—	—
92°C (198°F)	Turn OFF	—	—	—
114°C (237°F)	ON	OFF	- Limp Home - Hi Temp	Gradual power reduction according to engine temperature.

Testing the Radiator Cooling Fan

1. Connect the vehicle to the appropriate BRP diagnostic software, refer to *COMMUNICATION TOOLS* for procedure and connector location.
2. In BUDS2, select the following:
   – **Functions** tab
   – **Activate Cooling Fan** button.

If fan turns on, check CTS, wiring harness and connectors. If all parts are good, replace the ECM.

If fan does not turn on when the **Activate Cooling Fan** button is pressed, refer to the following troubleshooting chart.

COOLING FAN TROUBLESHOOTING CHART		
Is fan working?	YES →	Everything is OK
NO ↓		
Check "Relay driver" fuse (5A) and fan fuse (F9 25A). Is fuse burnt?	YES →	Replace fuse Is fan working?
NO ↓		
Bypass fan relay R1		
↓		
Fan turns?	YES →	Replace relay Is fan working?
NO ↓		
Apply 12 Vdc to fan connector		
↓		
Fan turns?	NO →	Replace fan Is fan working?
YES ↓		
Check CTS		
↓		
CTS works?	NO →	Replace CTS Is fan working?
YES ↓		
Check wiring harness and connectors		
↓		
Harness and connectors good?	NO →	Repair or replace defective part(s)
YES ↓		
Try a new ECM	→	Is fan working?

Removing the cooling fan

1. Remove radiator, refer to *REMOVING THE RADIATOR*.
2. Disconnect electrical connector, unhook differential vent and cut tie-raps.

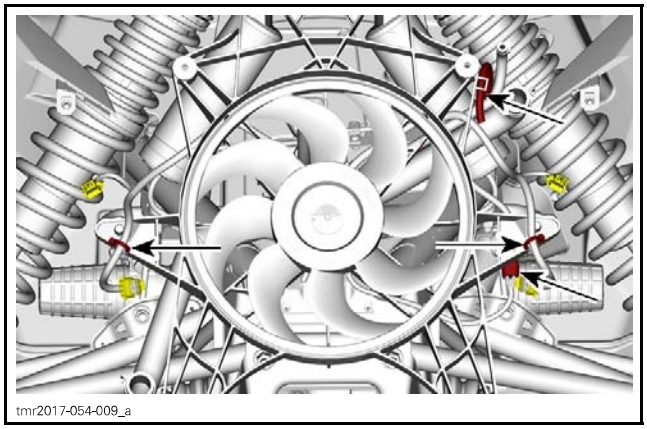

3. Remove screws holding the fan.

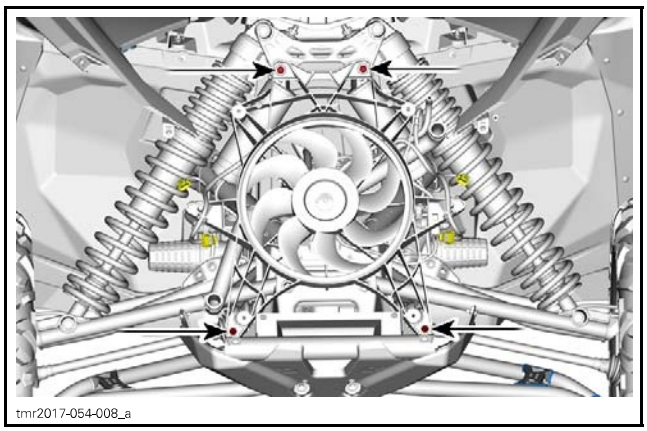

Installing the Radiator Cooling Fan

For the installation, reverse the removal procedure.

MAGNETO AND STARTER

SERVICE TOOLS

Description	Part Number	Page
CRANKSHAFT PROTECTOR	529 036 213	7
FLUKE 115 MULTIMETER	529 035 868	5
FLYWHEEL PULLER	420 976 235	7

SERVICE PRODUCTS

Description	Part Number	Page
KLÜEBER PASTE 46 MR 401	420 297 616	12
LOCTITE 243 (BLUE)	293 800 060	6, 8
LOCTITE 648 (GREEN)	413 711 400	9
LOCTITE CHISEL (GASKET REMOVER)	413 708 500	4
PULLEY FLANGE CLEANER	413 711 809	7, 9

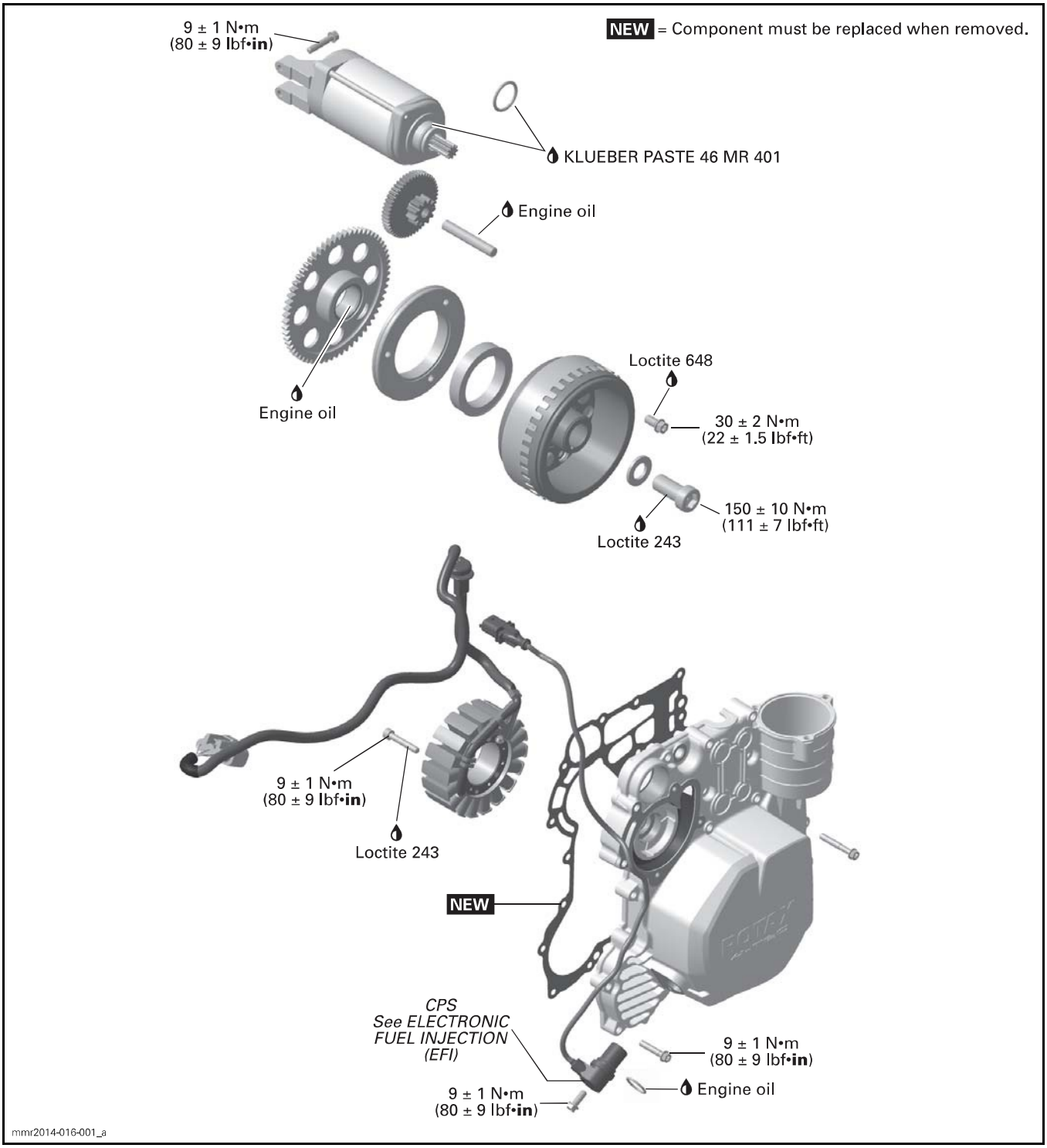
NEW = Component must be replaced when removed.
9 ± 1 N•m
(80 ± 9 lbf•in)
KLUEBER PASTE 46 MR 401
Engine oil
Engine oil
Loctite 648
30 ± 2 N•m
(22 ± 1.5 lbf•ft)
150 ± 10 N•m
(111 ± 7 lbf•ft)
Loctite 243
9 ± 1 N•m
(80 ± 9 lbf•in)
Loctite 243
NEW
CPS
See ELECTRONIC
FUEL INJECTION
(EFI)
9 ± 1 N•m
(80 ± 9 lbf•in)
Engine oil
9 ± 1 N•m
(80 ± 9 lbf•in)
mmr2014-016-001_a

GENERAL

⚠ WARNING

Always disconnect BLACK (-) cable first and reconnect last.

During assembly/installation, use the torque values and service products as in the exploded view.

Clean threads before applying a threadlocker. Refer to *SELF-LOCKING FASTENERS* and *LOCTITE APPLICATION* at the beginning of this manual for complete procedure.

⚠ WARNING

Torque wrench tightening specifications must strictly be adhered to.
Locking devices when removed (ex: locking tabs, cotter pin, etc.) must be replaced.

NOTICE **Hoses, cables or locking ties removed during a procedure must be reinstalled as per factory standards.**

TROUBLESHOOTING

Always check for fault codes. If a fault code is detected, service the fault code first. Refer to *DIAGNOSTIC AND FAULT CODES* subsection.

ENGINE DOES NOT CRANK

1. **Battery voltage too low.**
   - *Check battery condition.*
2. **Starter is turning but engine does not crank.**
   - *Check sprag clutch for wear or other damages.*
3. **Starter is defective.**
   - *Check starter condition. Perform STARTER OPERATION TEST and STARTER VOLTAGE DROP TEST.*
4. **Engine is only cranking 1 - 2 seconds before it stops.**
   - *Check battery condition.*

PROCEDURES

MAGNETO COVER

Removing the Magneto Cover

1. Drain engine oil and coolant. Refer to *PERIODIC MAINTENANCE PROCEDURES* subsection.
2. Remove the protective cover.

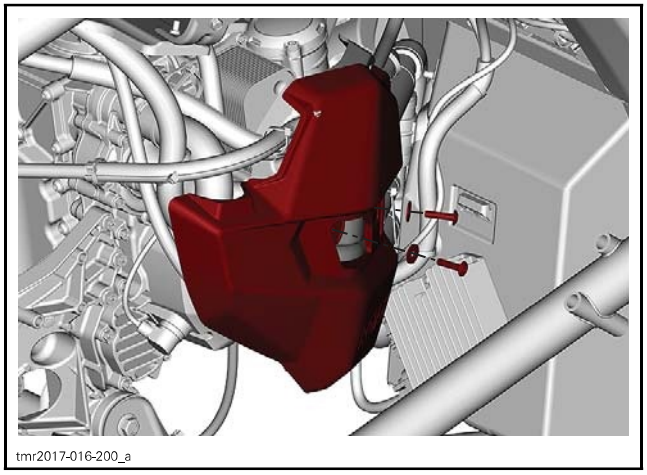
tmr2017-016-200_a

3. Cut all locking ties securing hoses on the hoses support.

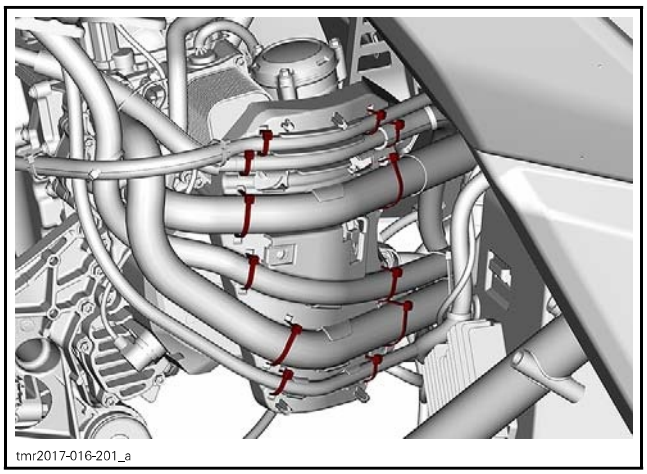
tmr2017-016-201_a

4. Remove the hoses support.

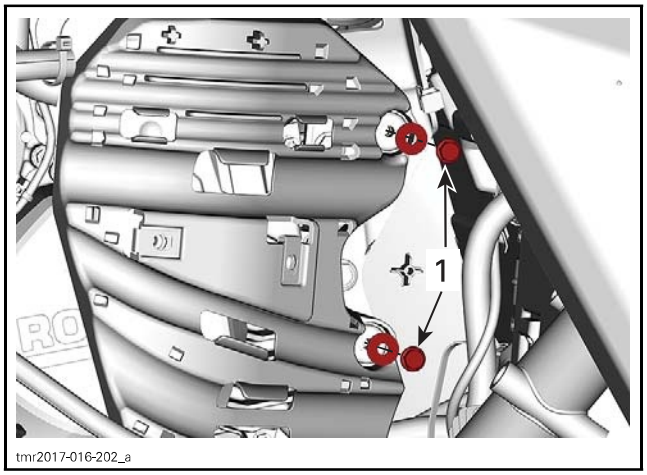

tmr2017-016-202_a

5. Refer to *COOLING SYSTEM* and remove:
   – Water pump housing
   – Thermostat housing.

6. Refer to *LUBRICATION SYSTEM* subsection and remove:
   – Oil pressure regulator
   – Oil cooler.
7. Remove the CPS.

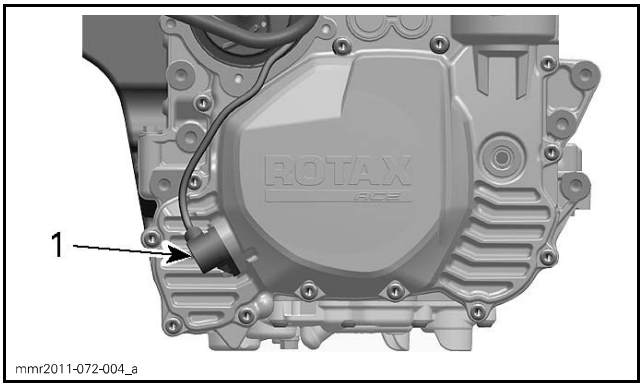

1. CPS

8. Remove magneto cover retaining screws.

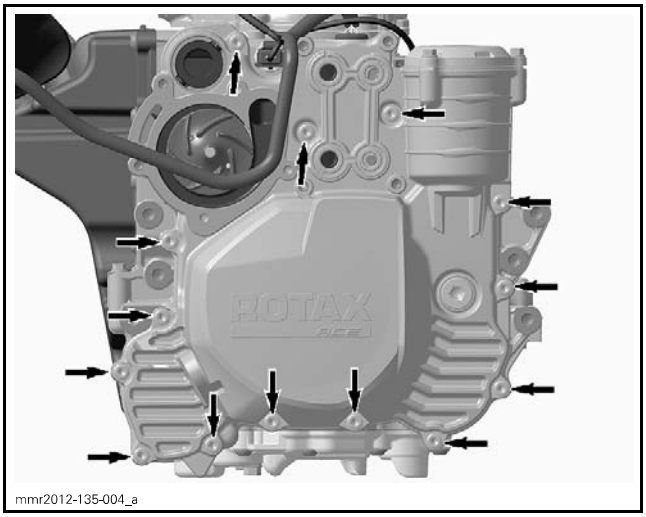

MAGNETO COVER SCREWS

9. Place an oil pan under magneto area to catch remaining oil.
10. Pull magneto cover off.

Inspecting the Magneto Cover

Check magneto cover for cracks or other damage. Replace if necessary.

Installing the Magneto Cover

1. Clean magneto cover.

MAGNETO COVER CLEANING	
Service product	LOCTITE CHISEL (GASKET REMOVER) (P/N 413 708 500)

2. Install a NEW magneto cover gasket.
3. Ensure starter drive gear pin is in place.
4. Apply engine oil on starter drive gear pin.

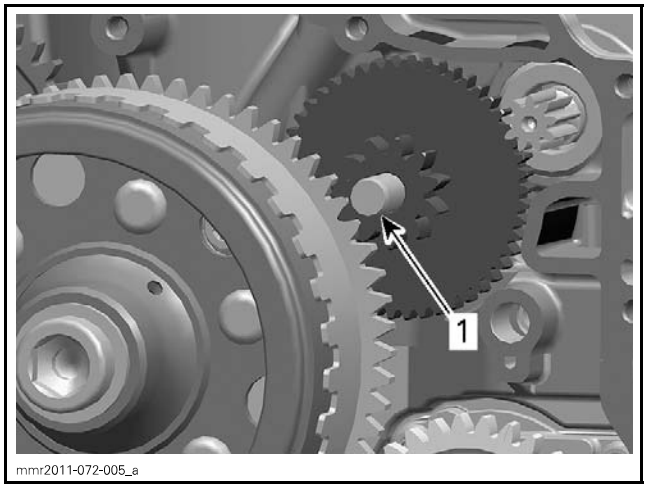

APPLY ENGINE OIL
1. Starter drive gear pin

5. Apply engine oil on water pump shaft.

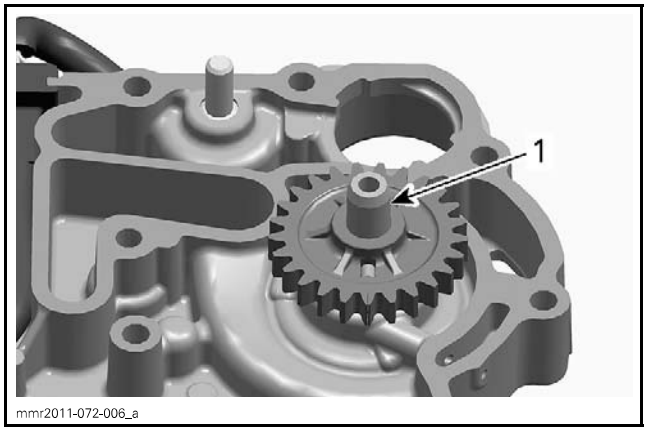

1. Water pump shaft - apply engine oil

NOTICE Make sure that the stator cable harness is embedded into the channel. The part of the harness that is out of the channel must be tight, otherwise it might chafe or jam.

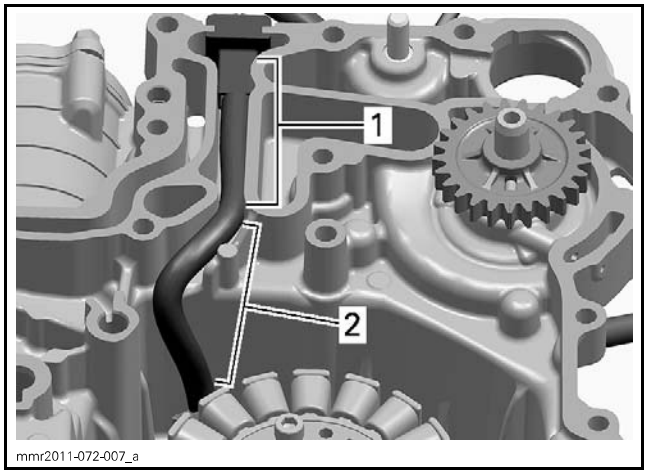

1. Embedded in that area
2. Tight in this area

6. Carefully install magneto cover.

⚠ CAUTION Magnetic force between magneto flywheel and stator is very high. Avoid finger contusions.

7. Tighten magneto cover screws according to the following sequence.

TIGHTENING TORQUE	
Magneto cover screws	9 N•m ± 1 N•m (80 lbf•**in** ± 9 lbf•**in**)

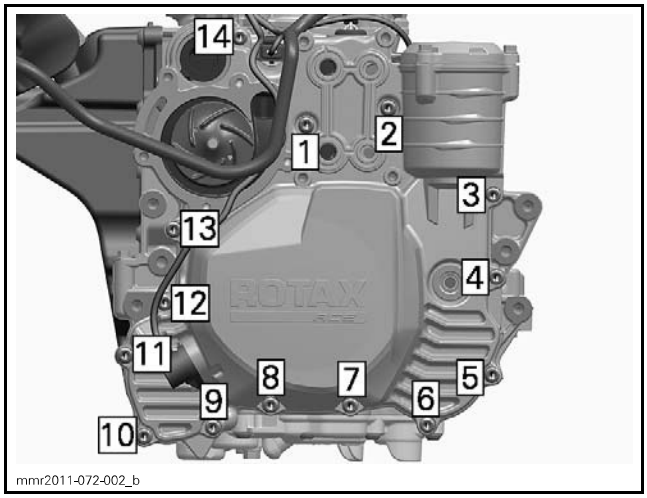

TIGHTENING SEQUENCE

8. Install all other removed parts.

STATOR

Testing the Stator Continuity

1. Disconnect the stator connector from voltage regulator.
2. Set the multimeter to Ω.

REQUIRED TOOL	
FLUKE 115 MULTIMETER (P/N 529 035 868)	

3. Probe each pair of YELLOW wires by touching (NOT inserting) terminals lock tabs as shown.

NOTICE Never insert a multimeter probe into a terminal as it would ruin the terminal.

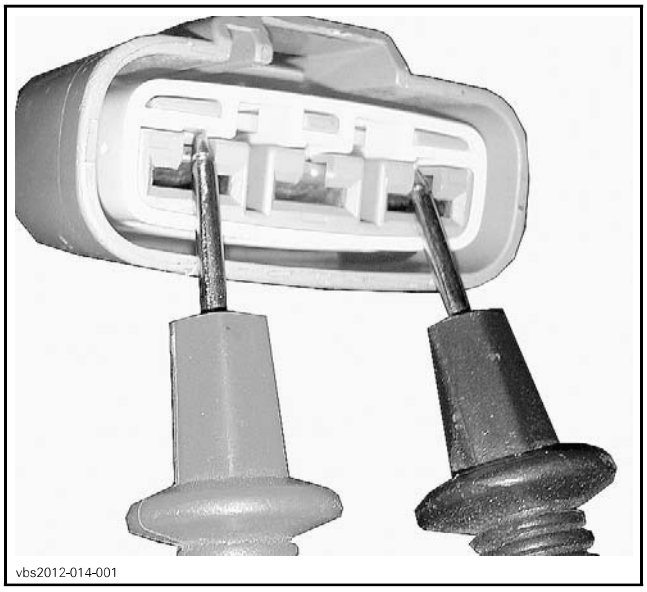

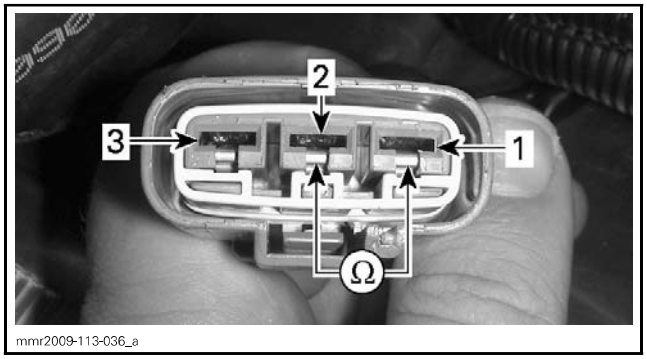

1. Pin #1
2. Pin #2
3. Pin #3

4. Read resistance as per following table.

STATOR CONTINUITY TEST	
YELLOW WIRES (EACH PAIR)	RESISTANCE @ 20°C (68°F)
Pins 1 and 2	0.1 - 1 Ω
Pins 1 and 3	
Pins 2 and 3	

If any resistance reading is not as specified, the stator or the wiring (including connector) is open and needs to be repaired or replaced.

If resistance is good, perform the stator insulation test.

Testing the Stator Insulation

1. Connect multimeter between any YELLOW wire and chassis ground.

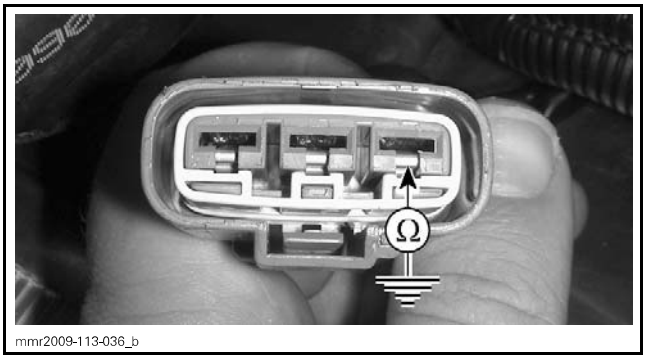

mmr2009-113-036_b

2. Read resistance.

STATOR INSULATION TEST	
PROBE POSITIONS	RESISTANCE @ 20°C (68°F)
Any YELLOW wire and chassis ground	Infinity (OL)

If any resistance reading is not as specified, the stator or the wiring is shorted to ground and needs to be repaired or replaced.

If the insulation test is good, perform the output voltage test.

Removing the Stator

1. Remove the *MAGNETO COVER*, see procedure in this subsection.
2. Remove stator retaining screws.

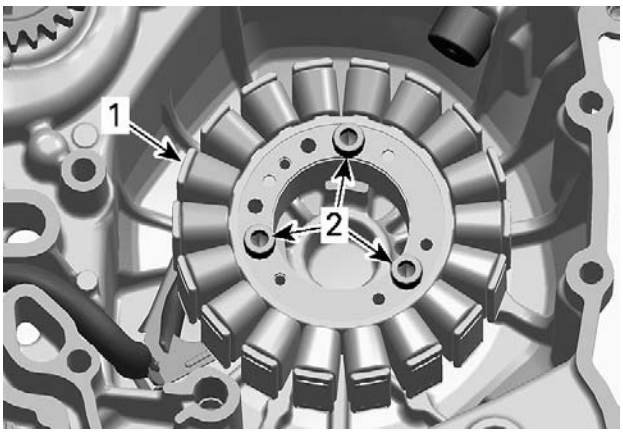

mmr2011-072-008_a

1. Stator
2. Stator retaining screws

3. Remove stator.

Inspecting the Stator

Check stator windings and insulation for cracks and other damages. If damaged replace it.

Check if stator wires are brittle, hard or otherwise damaged.

Installing the Stator

1. Ensure that the stator cable is underneath the cable holder during installation of the stator.

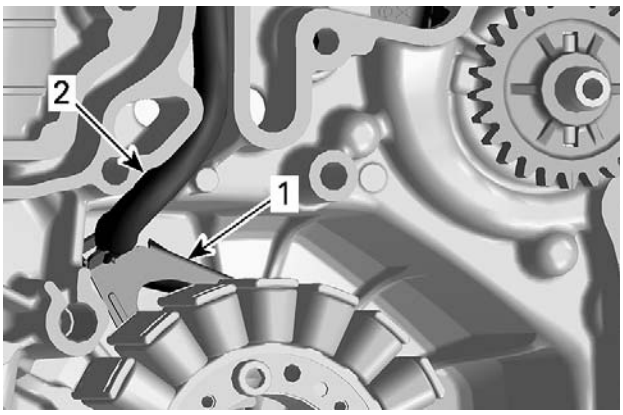

mmr2011-072-009_a

1. Cable holder
2. Stator cable

2. Install stator retaining screws and tighten to the specified torque.

TIGHTENING TORQUE	
Service product	LOCTITE 243 (BLUE) (P/N 293 800 060)
Stator retaining screws	9 N•m ± 1 N•m (80 lbf•**in** ± 9 lbf•**in**)

3. Reinstall *MAGNETO COVER*, see procedure in this subsection.

ROTOR

Removing the Rotor

1. Remove the *MAGNETO COVER*, see procedure in this subsection.
2. Lock crankshaft. Refer to *CYLINDER BLOCK* subsection.
3. Remove rotor retaining screw and lock washer.

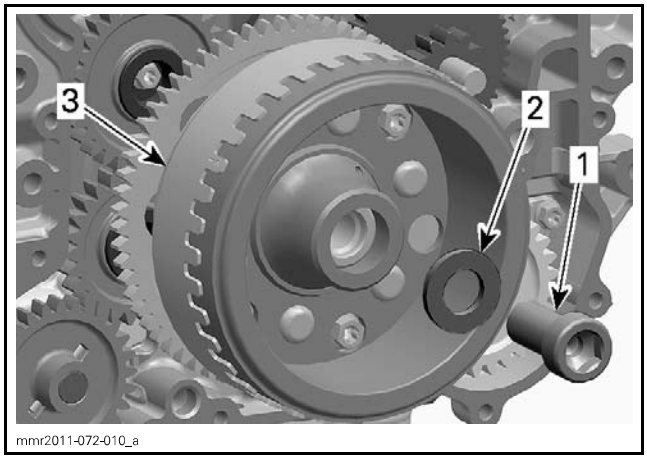

1. Retaining screw
2. Lock washer
3. Rotor

4. Remove rotor.

REQUIRED TOOL	
CRANKSHAFT PROTECTOR (P/N 529 036 213)	
FLYWHEEL PULLER (P/N 420 976 235)	

NOTE: Apply some grease on the crankshaft protector surface to ease puller operation.

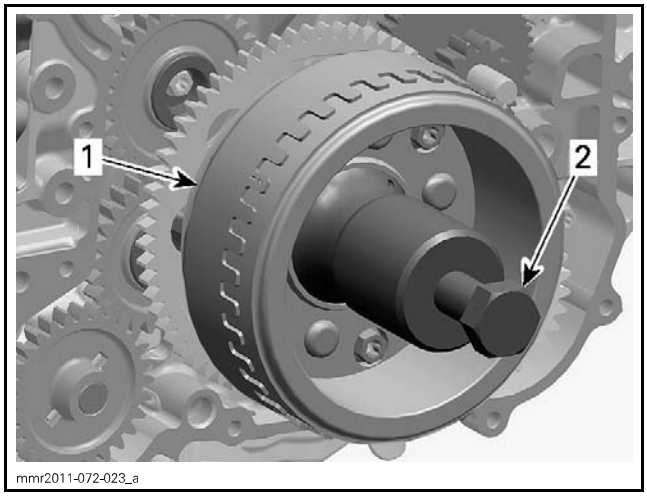

1. Rotor
2. Flywheel puller screw

Inspecting the Rotor

Check the inner side of the rotor for scratches or other damage.

Check keyway for wear or damages.

Check if trigger wheel teeth are bent or otherwise damaged.

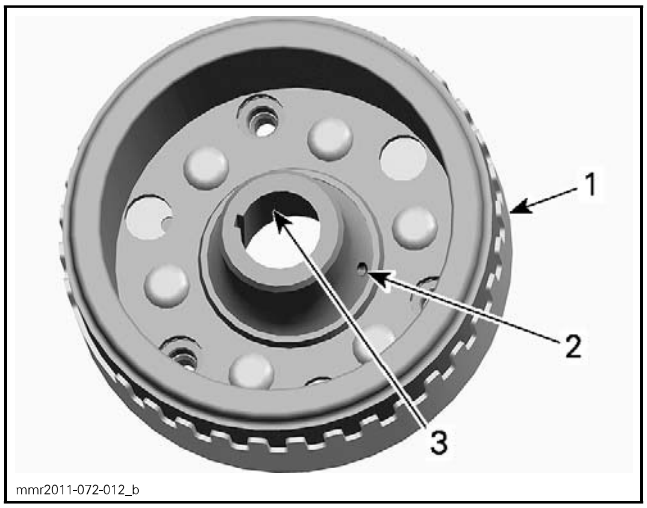

1. Rotor with trigger wheel
2. Oil passage in magneto hub
3. Rotor taper

Check woodruff key and keyway on the crankshaft for wear or damages.

Replace parts as necessary.

Installing the Rotor

Installation is the reverse of the removal procedure. However, pay attention to the following.

1. Blow the oil passage in the magneto hub using compressed air. Check if it is clogged.
2. Using PULLEY FLANGE CLEANER (P/N 413 711 809), clean:
   - The oil passage
   - The crankshaft thread
   - The crankshaft taper
   - The rotor taper.

NOTICE **Taper on crankshaft and rotor must be free of grease.**

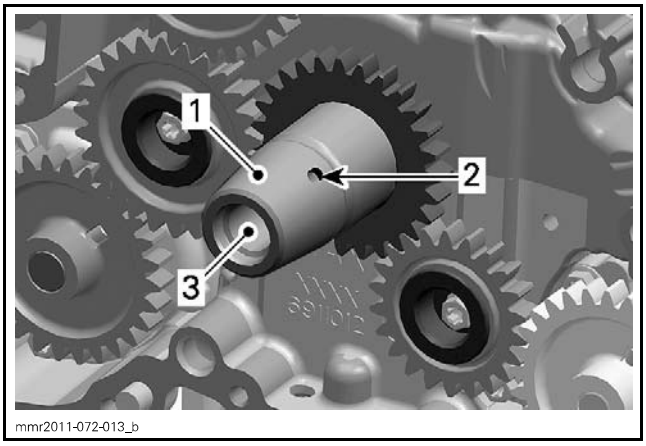

1. *Crankshaft taper*
2. *Oil passage*
3. *Thread*

3. Apply oil on sprag clutch and needle bearing.
4. Install sprag clutch gear onto the rotor.

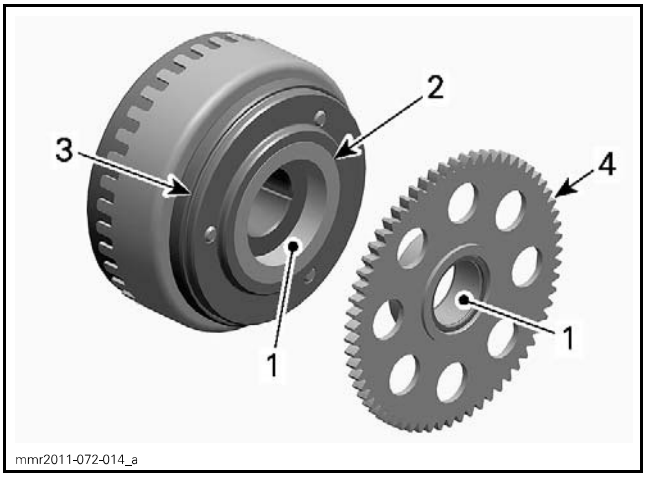

1. *Apply engine oil here*
2. *Sprag clutch*
3. *Sprag clutch housing*
4. *Sprag clutch gear*

5. Slide rotor along with the sprag clutch gear onto the crankshaft. The woodruff key and keyway must be aligned.
6. Rotate sprag clutch gear counterclockwise to align with starter double gear.

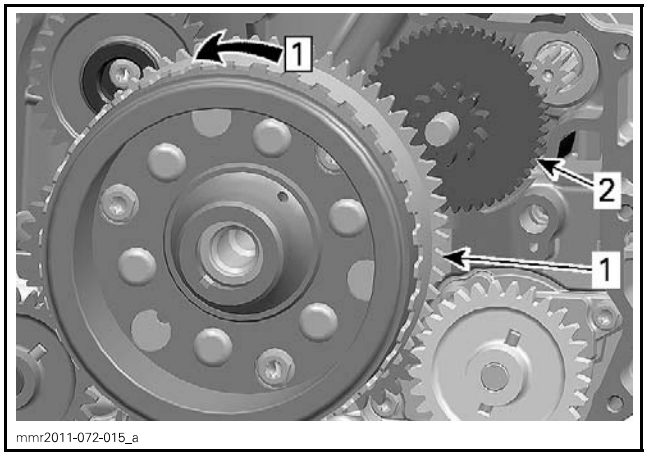

Step 1: Rotate to align teeth

1. *Sprag clutch gear*
2. *Starter double gear*

7. Install washer and retaining screw.
8. Tighten to the specified torque.

TIGHTENING TORQUE	
Service product	LOCTITE 243 (BLUE) (P/N 293 800 060)
Rotor retaining screw	150 N•m ± 10 N•m (111 lbf•ft ± 7 lbf•ft)

SPRAG CLUTCH

Removing the Sprag Clutch

1. Remove the *MAGNETO COVER*, see procedure in this subsection.
2. Lock crankshaft. Refer to *CYLINDER BLOCK* subsection.
3. Loosen and remove sprag clutch housing screws.

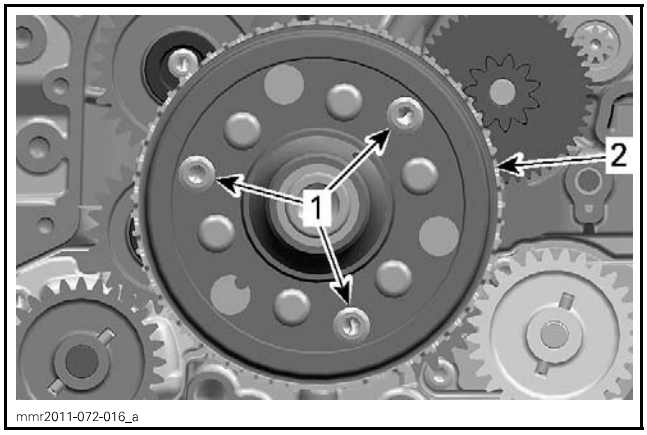

1. *Sprag clutch housing screws*
2. *Rotor*

4. Remove *ROTOR*, see procedure in this subsection.
5. Remove sprag clutch housing.

6. Remove sprag clutch from sprag clutch housing.

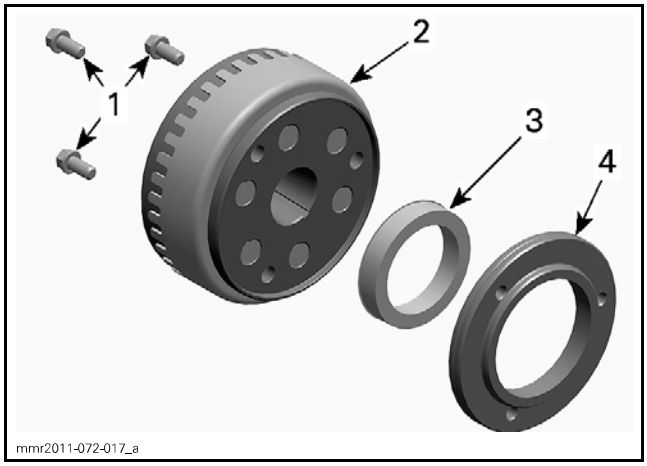

1. *Sprag clutch housing screws*
2. *Rotor*
3. *Sprag clutch*
4. *Sprag clutch housing*

Inspecting the Sprag Clutch

Inspect sprag clutch and sprag clutch housing for wear and damage.

Check the collar of the sprag clutch gear, refer to *SPRAG CLUTCH GEAR*.

Rotate sprag clutch gear clockwise. Gear must rotate freely.

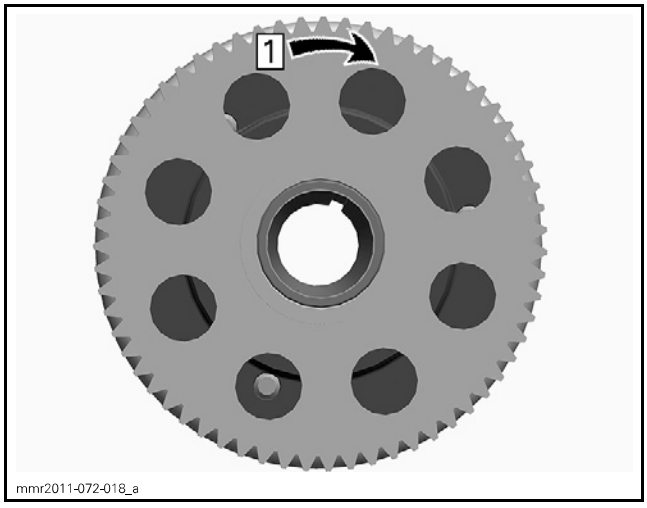

Step 1: Free

Rotate sprag clutch gear counterclockwise. Gear must lock.

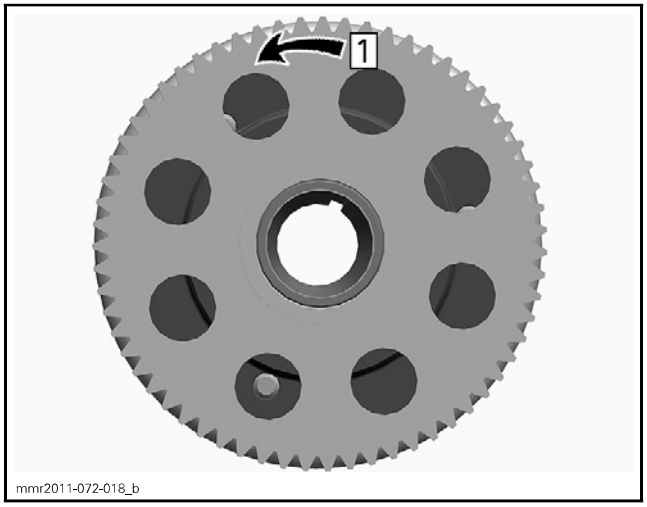

Step 1: Lock

Installing the Sprag Clutch

1. Clean sprag clutch housing with a parts cleaner.

NOTICE **Threads of sprag clutch housing must be free of any lubricants.**

SPRAG CLUTCH HOUSING	
Service product	PULLEY FLANGE CLEANER (P/N 413 711 809)

2. Apply thread locker on threads of sprag clutch housing screws.

SPRAG CLUTCH HOUSING SCREWS	
Service product	LOCTITE 648 (GREEN) (P/N 413 711 400)

3. Loosely install screws.
4. Apply engine oil on sprag clutch and sprag clutch gear needle bearing.

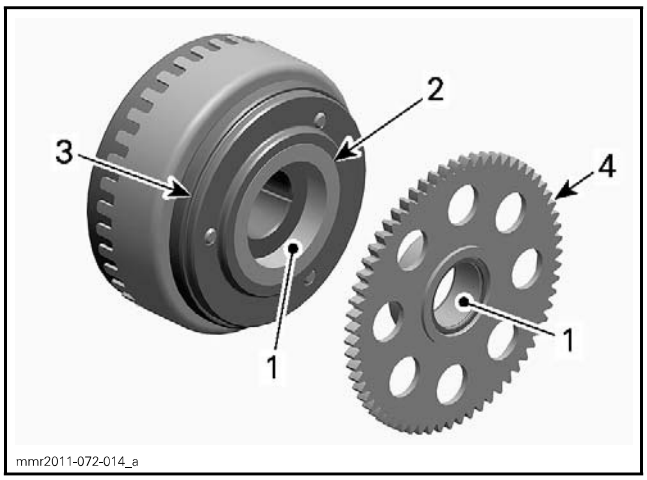

1. *Apply engine oil here*
2. *Sprag clutch*
3. *Sprag clutch housing*
4. *Sprag clutch gear*

5. Install *ROTOR*, see procedure in this subsection.
6. Tighten sprag clutch housing screws to the specified torque.

TIGHTENING TORQUE	
Sprag clutch housing screws	30 N•m ± 2 N•m (22 lbf•ft ± 1 lbf•ft)

7. Install all other removed parts.

SPRAG CLUTCH GEAR

Removing the Sprag Clutch Gear

1. Remove rotor and sprag clutch gear together. Refer to *ROTOR* in this subsection.
2. Pull sprag clutch gear out of the rotor.

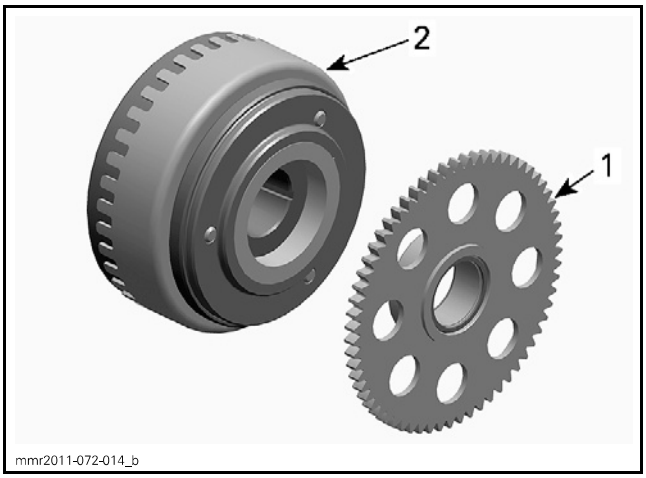

1. Sprag clutch gear
2. Rotor

Inspecting the Sprag Clutch Gear

Inspect gear, especially teeth and sprag clutch collar for wear and other damage.

Check needle bearing for wear and pittings.

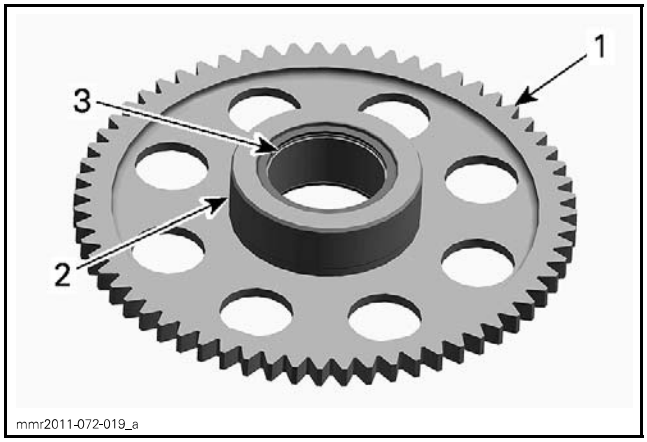

1. Teeth
2. Collar
3. Needle bearing

Replace sprag clutch gear if necessary.

Installing the Sprag Clutch Gear

The installation is the reverse of the removal procedure. However, pay attention to the following.

NOTE: Apply engine oil on needle bearing and collar of sprag clutch gear.

STARTER DRIVE GEARS

The starter drive gears are located on the engine MAG side behind the magneto cover.

Removing the Starter Drive Gear

1. Remove *MAGNETO COVER*, see procedure in this subsection.
2. Remove location pin and starter double gear.

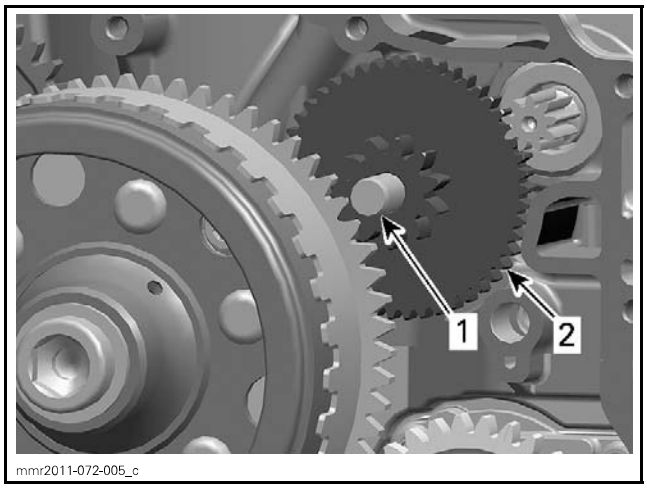

1. Location pin
2. Starter double gear

Inspecting the Starter Drive Gear

Inspect starter drive gears and location pin for wear and damage.

Replace parts if necessary.

Installing the Starter Drive Gear

The installation is the reverse of the removal procedure. However, pay attention to the following.

Apply engine oil on the location pin.

STARTER

Starter Location

The starter is located at the front of the engine, behind the rear service cover.

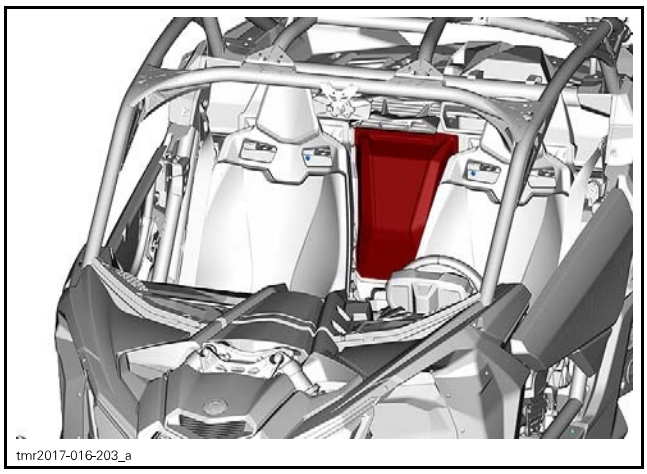
tmr2017-016-203_a

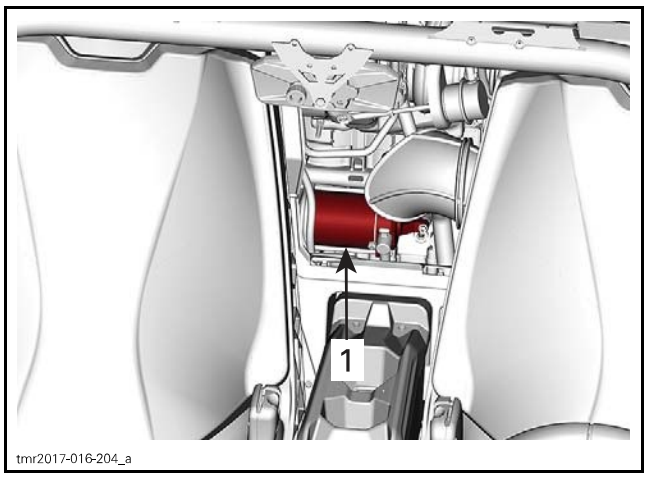

tmr2017-016-204_a

1. Starter

Testing the Starter Operation

Use booster cables and a booster battery to supply current directly to the starter.

1. Connect the RED jumper cable from the booster battery to the starter screw.
2. Momentarily connect the BLACK jumper cable to a mounting screw of the starter.

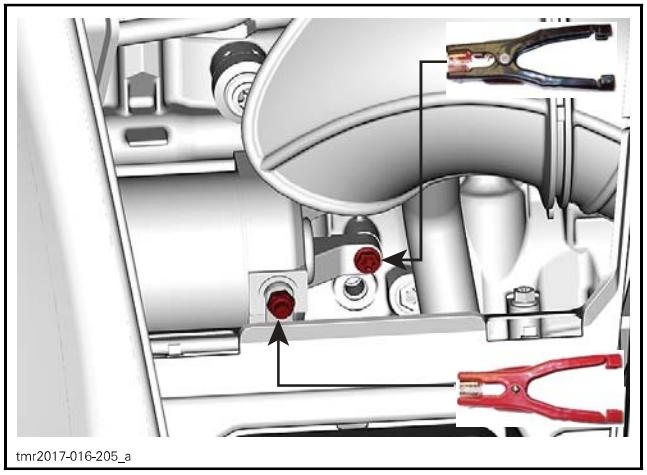
tmr2017-016-205_a

If the starter turns, test other starting system components. Refer to *STARTING SYSTEM* subsection.

Removing the Starter

1. Disconnect the BLACK (–) cable from the battery.
2. Remove the starter cable from starter.
3. Remove starter retaining screws.

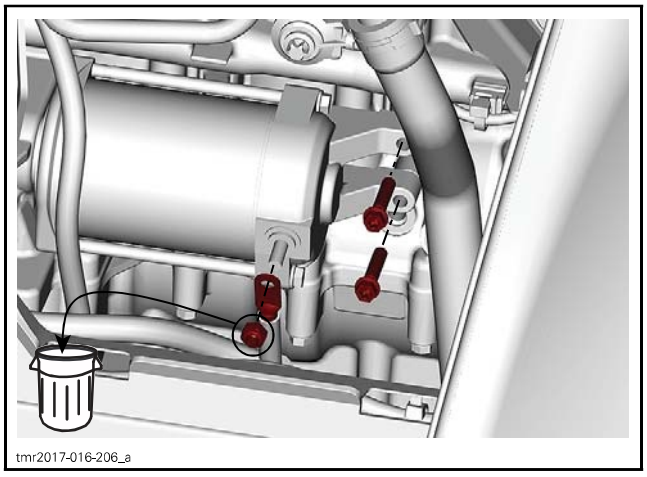
tmr2017-016-206_a

4. Pull starter off the cylinder block.

Installing the Starter

1. Ensure starter and engine mating surfaces are free of debris.

NOTICE **Serious problems may arise if the starter is not properly aligned.**

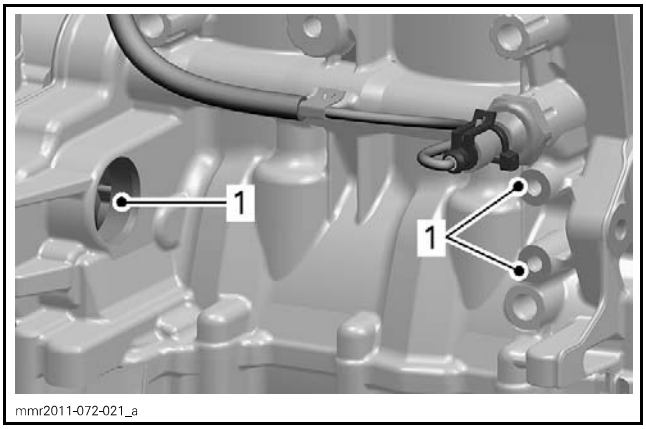

1. Clean mating surfaces

2. Lubricate on starter end and starter O-ring before installation.

STARTER BOSS AND O-RING	
Service product	KLÜEBER PASTE 46 MR 401 (P/N 420 297 616)

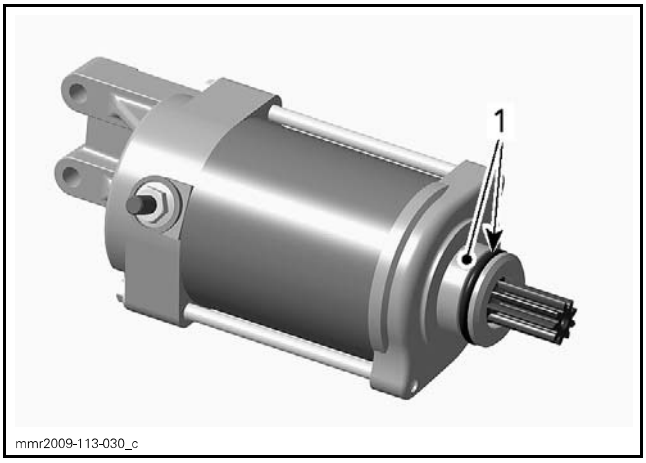

1. Apply grease here

3. Insert starter gear into engine.
4. Install starter screws and tighten to the specified torque.

TIGHTENING TORQUE	
Starter screws	9 N•m ± 1 N•m (80 lbf•**in** ± 9 lbf•**in**)

5. Connect the starter cable to the starter and tighten nut to the specified torque.

TIGHTENING TORQUE	
Starter cable nut	6 N•m ± 0.5 N•m (53 lbf•**in** ± 4 lbf•**in**)

6. Install all other removed parts.
7. Reconnect BLACK (–) cable on battery post.
8. Test for proper starter operation.

INTAKE MANIFOLD

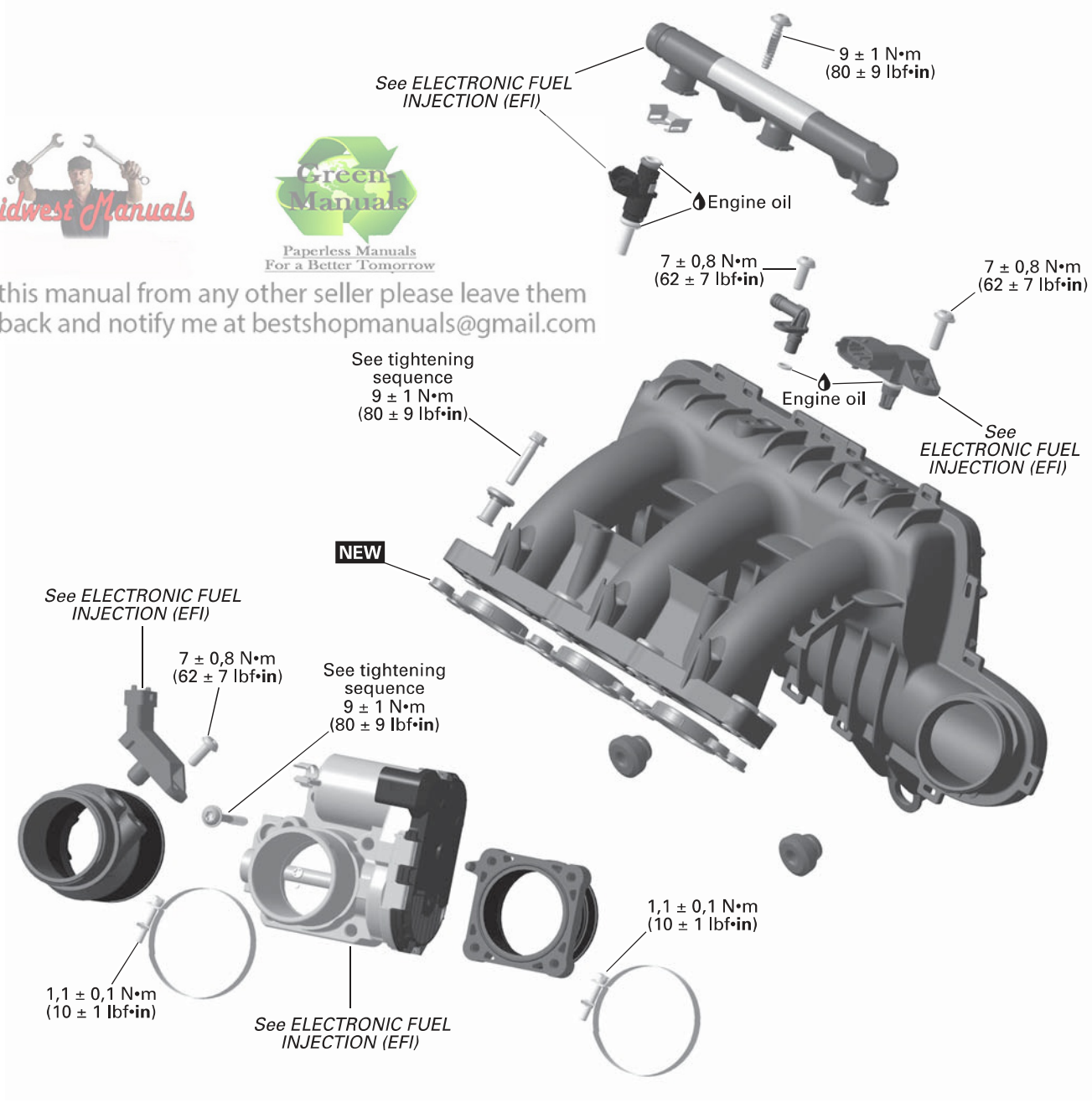

NEW = Component must be replaced when removed.

tmr2017-012-001_a

Midwest Manuals
Green Manuals
Paperless Manuals
For a Better Tomorrow
If you bought this manual from any other seller please leave them NEGATIVE feedback and notify me at bestshopmanuals@gmail.com

PROCEDURES

INTAKE MANIFOLD

Removing the Intake Manifold

1. Remove the rear rack assembly. Refer to *FRAME* subsection.
2. Remove the intercooler and its support to make room.
3. Remove the rear CVT outlet hose.

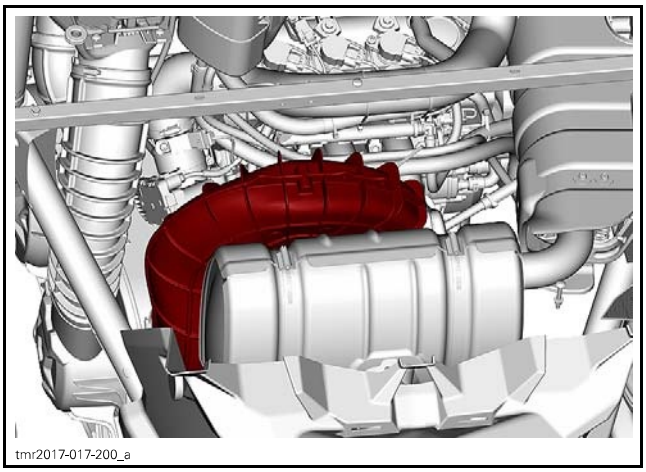
tmr2017-017-200_a

4. Loosen clamp securing air intake manifold to throttle body.

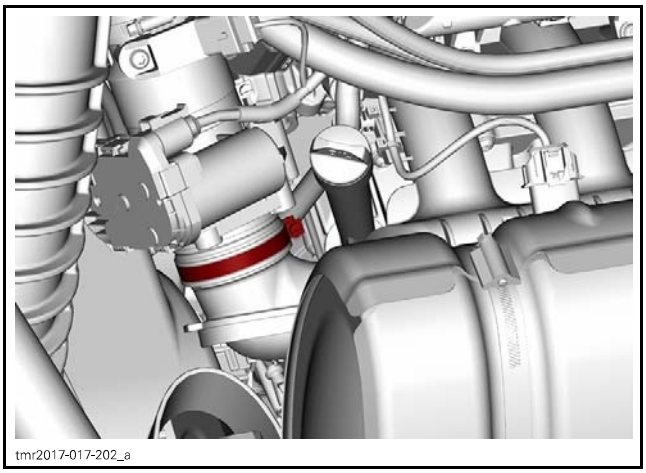
tmr2017-017-202_a

5. Cut locking ties securing MAPTS harness and disconnect MAPTS..

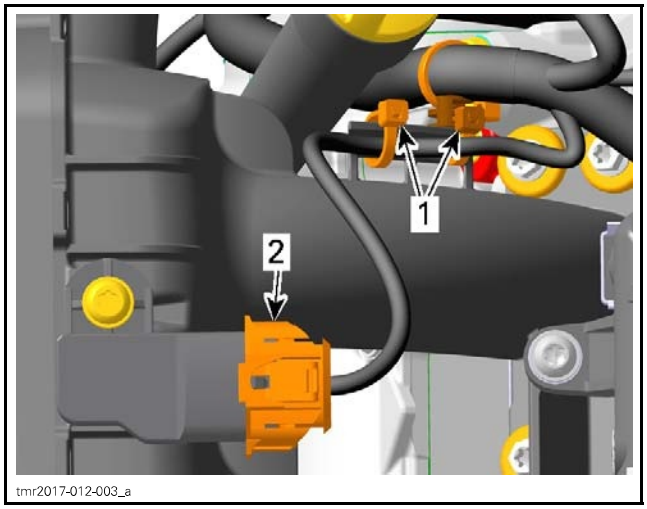

tmr2017-012-003_a

1. *Locking ties*
2. *MAPTS connector*

6. Cut locking tie securing hoses to intake manifold.

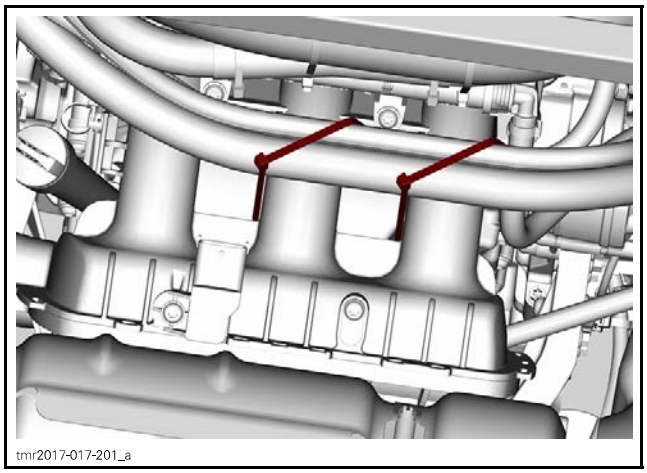
tmr2017-017-201_a

7. Disconnect fuel hose from fuel rail. Refer to *ELECTRONIC FUEL INJECTION (EFI)* subsection.

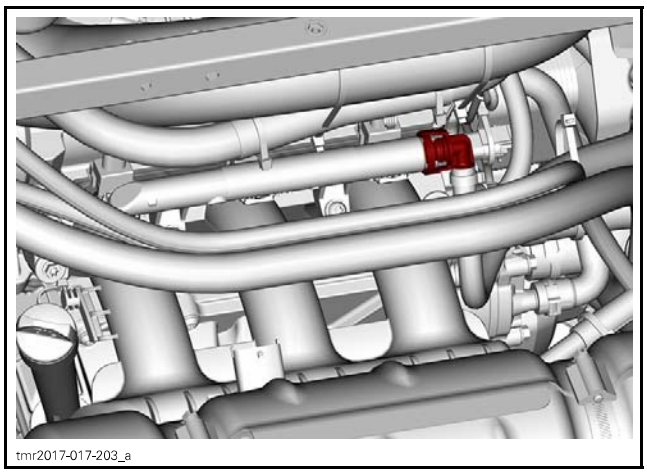
tmr2017-017-203_a

8. Disconnect fuel injector connectors.

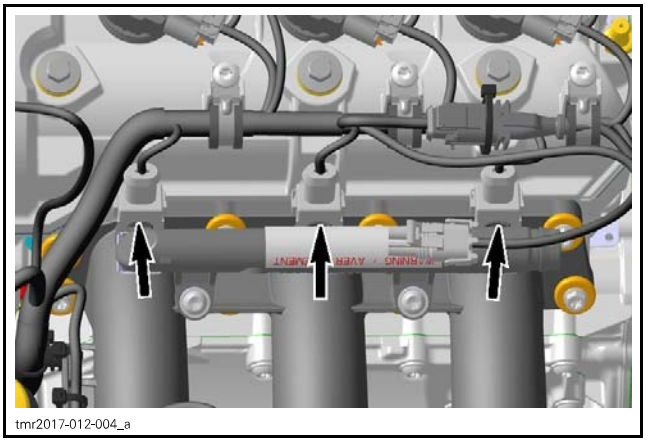
tmr2017-012-004_a

9. Remove screws securing intake manifold to cylinder head.

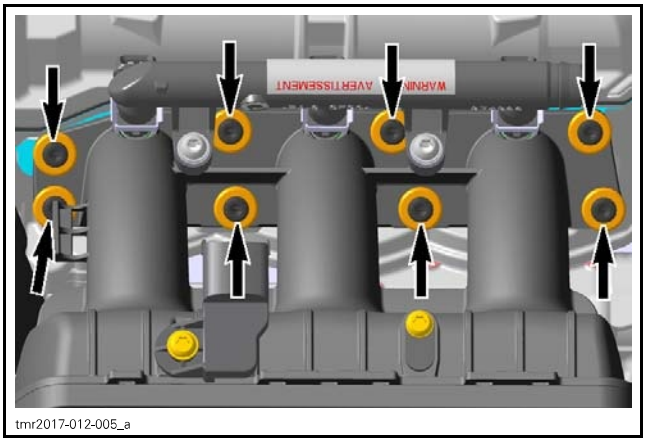
tmr2017-012-005_a

INTAKE MANIFOLD SCREWS

10. Remove intake manifold from engine.
11. Remove and discard intake manifold gaskets.
12. If required, remove following parts from intake manifold, refer to *ELECTRONIC FUEL INJECTION (EFI)* subsection:
    - MAPTS
    - Fuel rail with injectors.

Inspecting the Intake Manifold

Check intake manifold for cracks, warping at flanges or any other visible damage. Replace if required.

Drain intake manifold of any accumulated liquids.

Flush intake manifold with solvent and let dry.

Installing the Intake Manifold

Reverse the removal procedure. However, pay attention to the following.

If removed, refer to *ELECTRONIC FUEL INJECTION (EFI)* subsection to install:
- MAPTS
- Fuel rail with injectors.

Install **NEW** gasket.

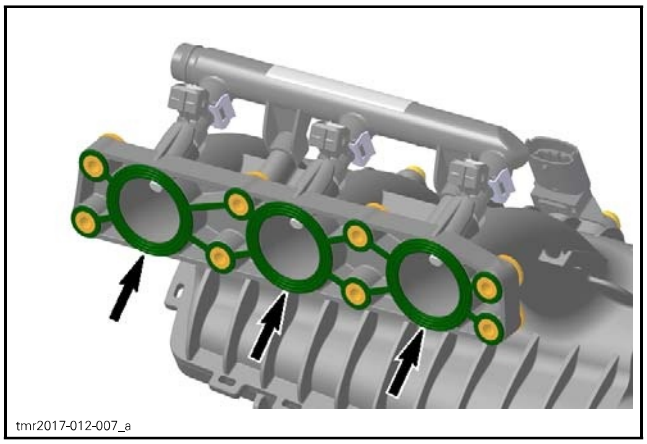
tmr2017-012-007_a

NOTICE **Engage intake manifold gasket onto silent block sleeves.**

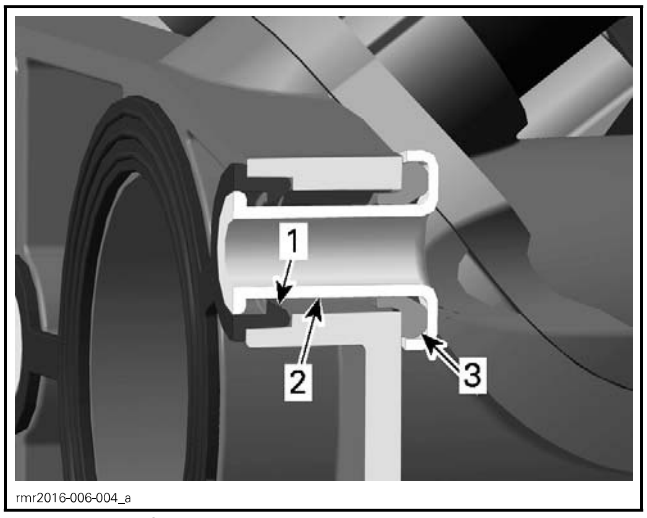

rmr2016-006-004_a

1. *Intake manifold gasket engaged on silent block sleeve*
2. *Silent block sleeve*
3. *Silent block rubber*

Ensure rubber grommets are properly inserted.

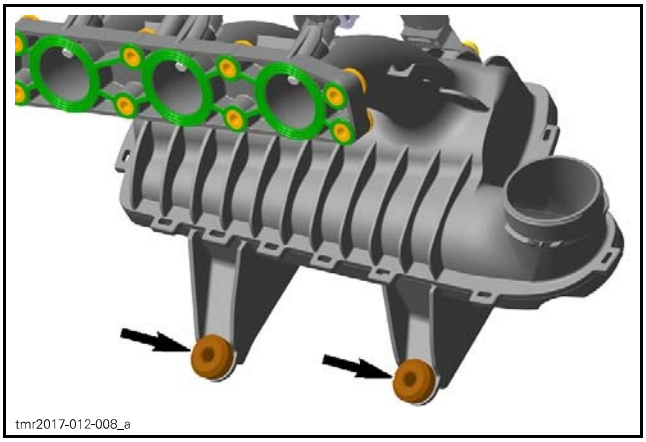

RUBBER GROMMETS

Tighten intake manifold screws to specification as per the following sequence.

TIGHTENING TORQUE	
Intake manifold screws	9 N•m ± 1 N•m (80 lbf•**in** ± 9 lbf•**in**)

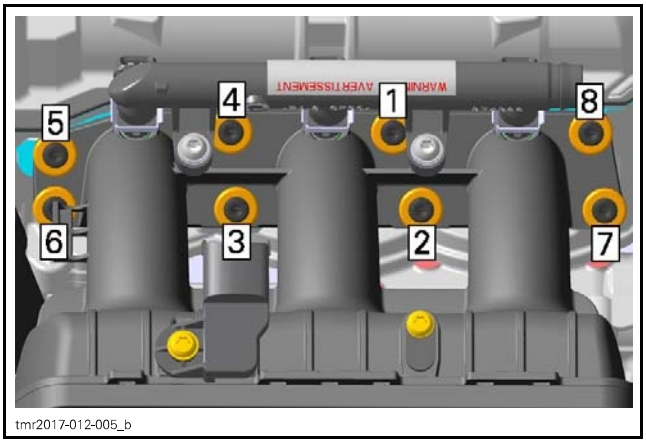

TIGHTENING SEQUENCE

Make sure to index connecting socket notch with the intake manifold tab.

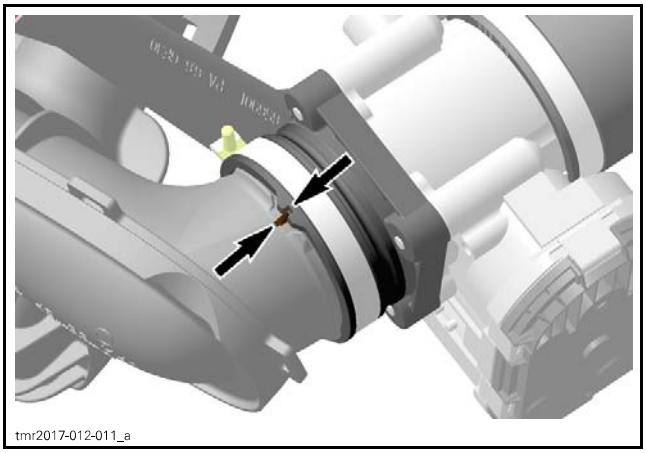

INTAKE MANIFOLD TAB

TIGHTENING TORQUE	
Intake manifold clamp	0.9 N•m ± 0.1 N•m (8 lbf•**in** ± 1 lbf•**in**)

TIMING CHAIN

SERVICE PRODUCTS

Description	Part Number	Page
LOCTITE 243 (BLUE)	293 800 060	4, 8

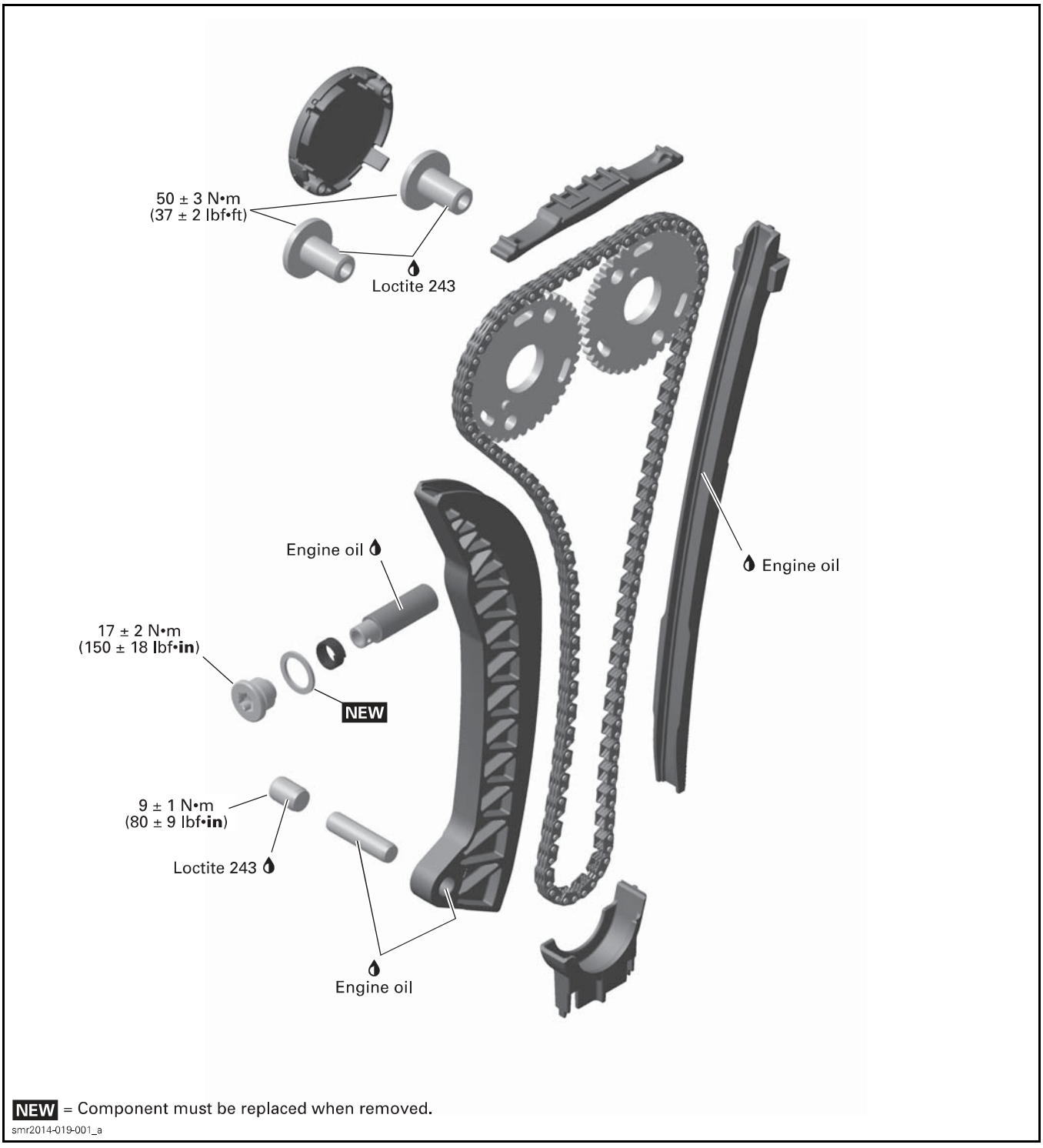

NEW = Component must be replaced when removed.

smr2014-019-001_a

GENERAL

Engine removal is necessary to work on the following components:

– Timing chain
– Timing chain guide (tensioner side).

Always disconnect BLACK (-) cable from the battery, then RED (+) cable before working on the engine.

⚠ WARNING

Always disconnect BLACK (-) cable first and reconnect last.

During assembly/installation, use torque values and service products as specified in the exploded view.

Clean threads before applying a threadlocker. Refer to *SELF-LOCKING FASTENERS* and *LOCTITE APPLICATION* at the beginning of this manual for complete procedure.

⚠ WARNING

Torque wrench tightening specifications must be strictly adhered to.
Locking devices when removed (e.g.: locking tabs, elastic stop nuts, cotter pin, etc.) must be replaced.

Hoses, cables or locking ties removed during a procedure must be reinstalled as per factory standards.

When disassembling parts that are duplicated in the engine, (e.g.: valves, springs, etc.), it is strongly recommended to note their position and to keep the parts of the same assembly as a "group". If you find a defective component, it will be much easier to find the cause of the failure. Since parts were broken-in together during engine operation, they will maintain their matched fit when reassembled together within their "group".

TROUBLESHOOTING

The following is provided to help in diagnosing the probable source of troubles. It is a guideline and should not be assumed to provide solutions to every cause of all problems.

UNUSUAL ENGINE NOISE OR VIBRATIONS

1. **Faulty chain tensioner.**
   - *Replace chain tensioner.*
2. **Chain guide(s) worn out.**
   - *Replace chain guide(s).*
3. **Stretched timing chain or worn sprockets.**
   - *Replace timing chain and sprockets.*
4. **Camshaft timing gear screws loose.**
   - *Retighten screws to recommended torque.*
5. **Incorrect camshaft timing adjustment.**
   - *Replace damaged components and readjust camshaft timing.*

ENGINE LACKS ACCELERATION OR POWER

1. **Incorrect camshaft timing adjustment.**
   - *Replace damaged components and readjust camshaft timing.*

PROCEDURES

TIMING CHAIN TENSIONER

Timing Chain Tensioner Location

The timing chain tensioner is located in the cylinder head beside the intake port of the PTO cylinder.

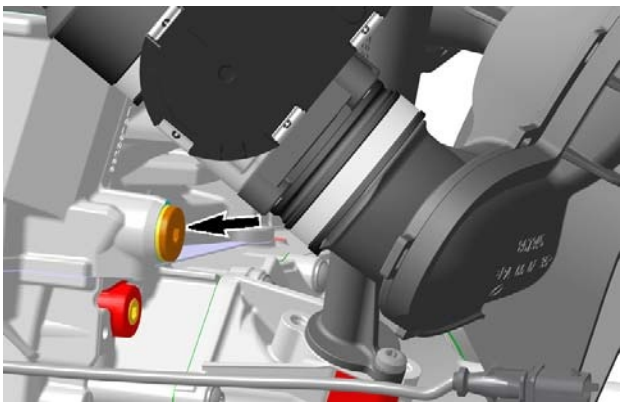

SCREW PLUG, TIMING CHAIN TENSIONER

Timing Chain Tensioner Access

Remove throttle body with connecting socket. Refer to *ELECTRONIC FUEL INJECTION (EIF)* subsection.

Removing the Timing Chain Tensioner

1. Lock crankshaft, refer to *CYLINDER BLOCK* subsection.
2. Remove screw plug and discard the sealing washer.
3. Pull out spring and chain tensioner.

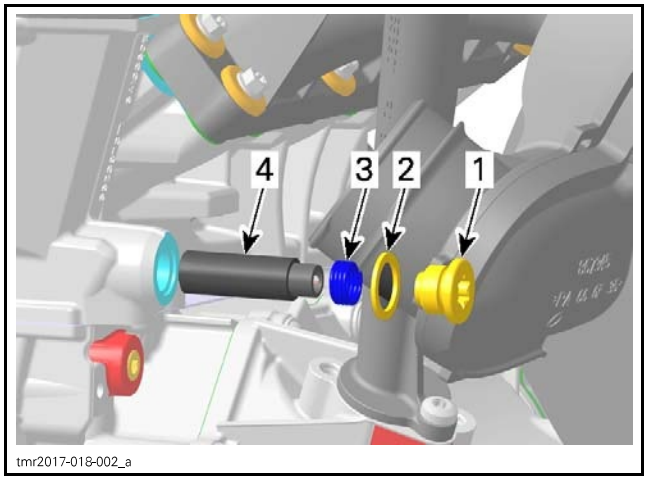

1. *Screw plug*
2. *Sealing washer*
3. *Spring*
4. *Chain tensioner*

Inspecting the Timing Chain Tensioner

1. Check chain tensioner for scoring and freedom of movement in bore.
2. Compress chain tensioner and check for proper operation.

NOTE: The chain tensioner is difficult to compress when properly charged with oil, and easily compressed when it is not.

3. Check spring for straightness, corrosion and other visible damage.

Installing the Timing Chain Tensioner

1. Apply engine oil on chain tensioner.
2. Insert chain tensioner in its bore with the plunger pointing outwards.

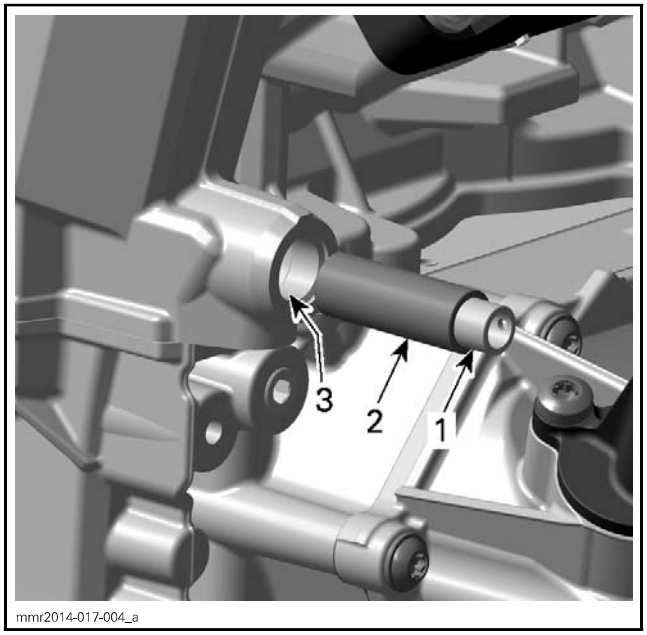

TIMING CHAIN TENSIONER INSTALLATION
1. *Plunger*
2. *Chain tensioner*
3. *Tensioner bore in cylinder head*

3. Install spring on chain tensioner.
4. Tighten screw plug to specified torque.

TIGHTENING TORQUE	
Sealing washer	NEW
Screw plug timing chain tensioner	17 N•m ± 2 N•m (150 lbf•**in** ± 18 lbf•**in**)

5. Install all other removed parts.

CAMSHAFT TIMING GEARS

Removing the Camshaft Timing Gear

Remove camshaft assembly. Refer to *CYLINDER HEAD* subsection.

Clamp camshaft in a vice using aluminium protectors.

NOTICE **Take care not damaging the cams.**

Unscrew and remove camshaft timing gear screw.

Remove camshaft timing gear.

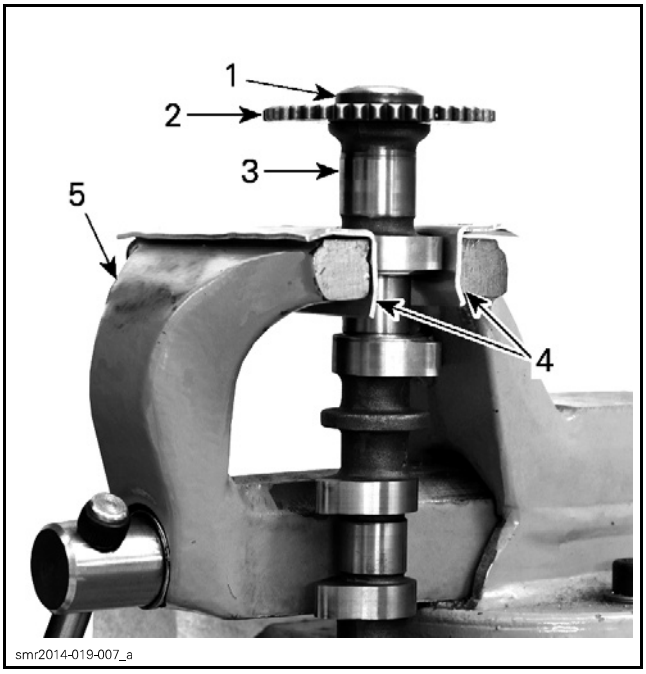

1. *Camshaft timing gear screw*
2. *Camshaft timing chain gear*
3. *Camshaft*
4. *Aluminium protectors*
5. *Vice*

Inspecting the Camshaft Timing Gear

Check camshaft timing gears for wear or deterioration. If a gear is worn or damaged, replace camshaft timing gears and timing chain as a set.

NOTE: For crankshaft timing gear inspection, refer to *CYLINDER BLOCK* subsection.

Installing the Camshaft Timing Gear

Installation is the reverse of the removal procedure. However, pay attention to the following details.

Tighten camshaft timing gear screw to specification.

NOTICE **Do not torque timing gear screws when camshafts are installed in cylinder head to avoid overstressing timing chain.**

TIGHTENING TORQUE	
Service product	LOCTITE 243 (BLUE) (P/N 293 800 060)
Timing gear screws	50 N•m ± 3 N•m (37 lbf•ft ± 2 lbf•ft)

NOTICE **Improper camshaft timing will damage engine components. Make sure camshafts and crankshaft are still locked. If not, lock them before beginning this procedure. Refer to *CAMSHAFTS* in the *CYLINDER HEAD* subsection.**

Install breather cover on exhaust camshaft.

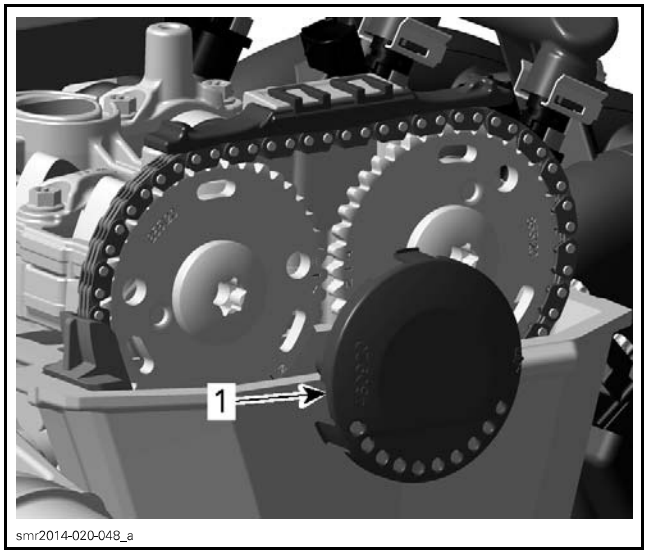

1. *Breather cover*

Install remaining parts.

TIMING CHAIN

Removing the Timing Chain

1. Remove engine from vehicle. Refer to *ENGINE REMOVAL AND INSTALLATION* subsection.
2. Remove air intake manifold, refer to *AIR INTAKE SYSTEM* subsection.
3. Remove valve cover, refer to *CYLINDER HEAD* subsection.
4. Refer to *LUBRICATION SYSTEM* subsection and remove the following parts:
   - Oil tank
   - Oil pressure regulator valve
   - Oil cooler
   - Oil sump cover.
5. Refer to *COOLING SYSTEM (ENGINE)* subsection and remove following parts:
   - Water pump housing
   - Thermostat.
6. Check timing chain for excessive radial play while still installed on timing gears.

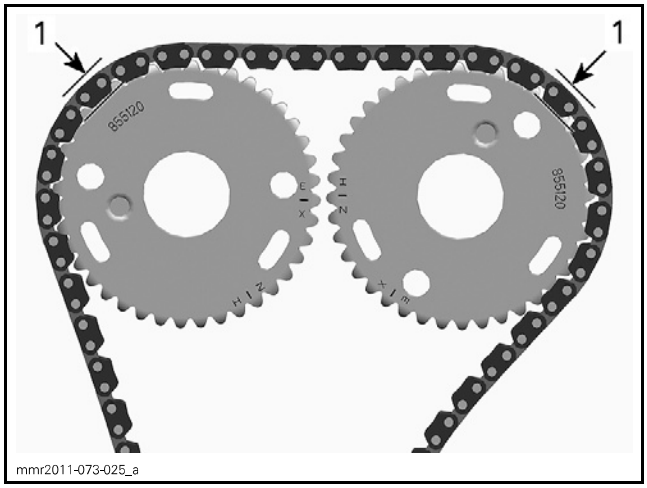

1. Radial play

7. Remove the *CAMSHAFTS*, refer to *CYLINDER HEAD* subsection.
8. Refer to *MAGNETO AND STARTER* subsection and remove the following parts:
   – Magneto cover
   – Rotor
   – Starter drive gears.
9. Remove oil pump intermediate gears, refer to *LUBRICATION SYSTEM* subsection.

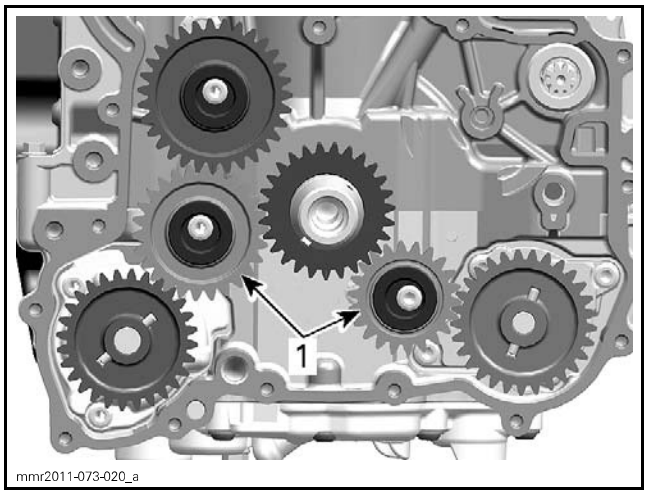

1. Oil pump intermediate gears

10. Remove crankshaft locking bolt.
11. Separate cylinder block, refer to *CYLINDER BLOCK* subsection.
12. Remove timing chain.

NOTE: Make a mark on the timing chain to indicate the operating direction of the chain before removal.

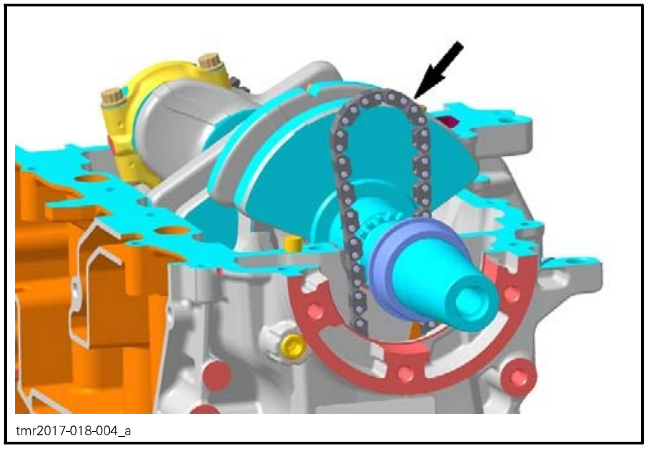

13. Remove lower timing chain guide from lower half of cylinder block.

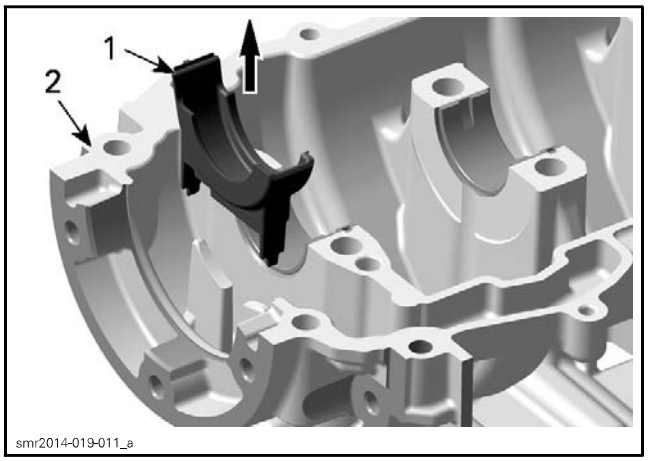

1. Lower timing chain guide
2. Lower half of cylinder block

Inspecting the Timing Chain

Check timing chain for wear and teeth condition.

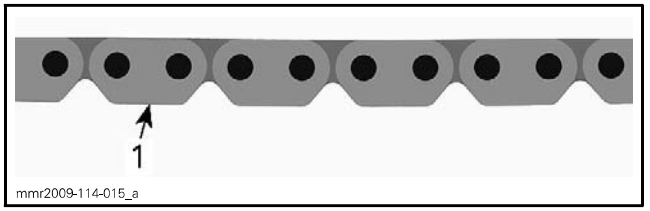

1. Check teeth condition

NOTICE If timing chain is excessively worn or damaged, replace timing chain and camshaft timing gears as a set.

Check lower chain guide for wear, cracks or deformation. Replace as required.

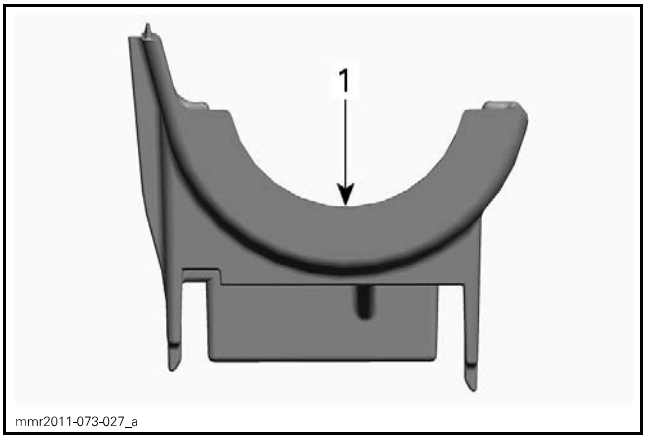

1. Lower chain guide

Replace lower chain guide if timing chain wear grooves are visible.

CHAIN GUIDE GROOVE DEPTH	
SERVICE LIMIT	No timing chain wear groove allowed

NOTE: Also check the chain guide, tensioner side. Refer to *INSPECTING THE CHAIN GUIDE (TENSIONER SIDE)* in this subsection.

Installing the Timing Chain

Installation is the reverse of the removal procedure. However, pay attention to the following details.

1. Install timing chain on crankshaft timing gear.

NOTE: If the same timing chain is reinstalled, be sure to reinstall it in the same operating direction as marked during removal procedure.

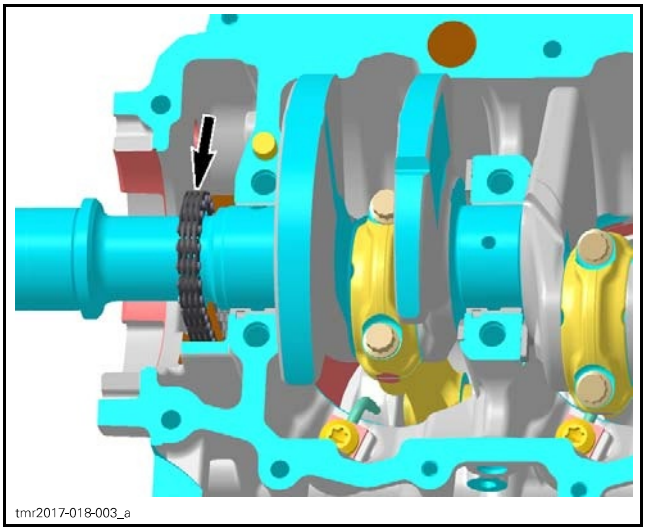

2. Reinstall lower chain guide in lower half of cylinder block.

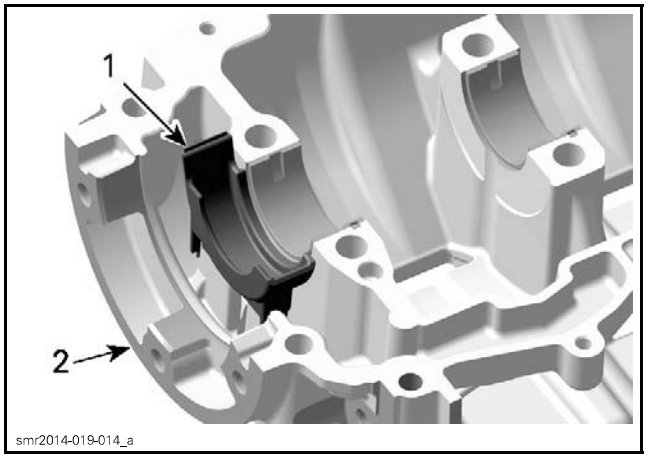

1. Lower chain guide
2. Lower half of cylinder block

3. Reassemble cylinder block, refer to *CYLINDER BLOCK* subsection.
4. Lock crankshaft, refer to *CRANKSHAFT LOCKING PROCEDURE* in the *CYLINDER BLOCK* subsection.
5. Reinstall timing chain properly on camshaft timing gears. Refer to *INSTALLING THE CAMSHAFT* in the *CYLINDER HEAD* subsection.

NOTICE **Improper camshaft timing will damage engine components.**

6. Install all other removed parts.

NOTE: Be sure to remove camshaft and crankshaft locking tools when timing chain is completely installed.

CHAIN GUIDE (TENSIONER SIDE)

Removing the Chain Guide (Tensioner Side)

NOTE: Removal of chain guide is not recommended if there is no need for replacement.

1. Remove the *CAMSHAFTS*. Refer to *CYLINDER HEAD* subsection.
2. Remove screw plug that covers the chain guide bearing pin.

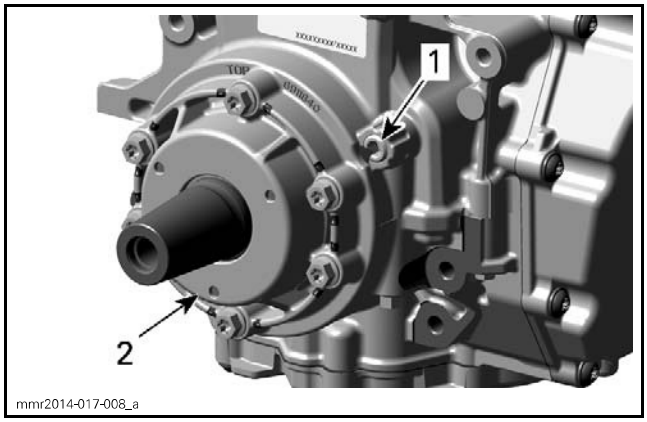

1. Screw plug location
2. PTO cover

3. Use an M6 bolt to pull chain guide bearing pin out of cylinder block.

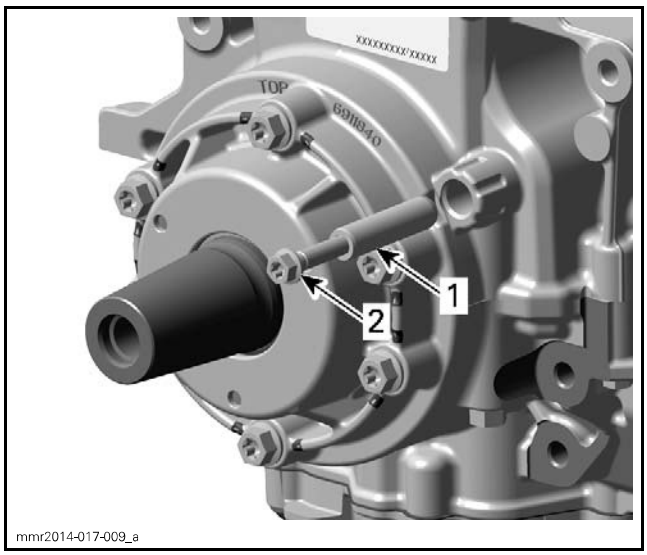

1. Chain guide bearing pin
2. M6 bolt

4. Remove chain guide (tensioner side).

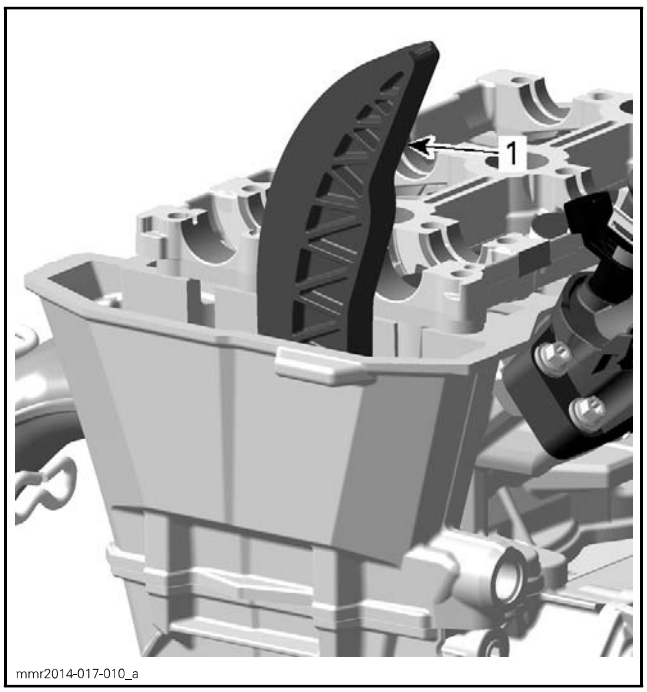

1. Chain guide (tensioner side)

Inspecting the Chain Guide (Tensioner Side)

Check chain guide for wear, cracks or deforming. Replace as required.

Replace chain guide if groove depth caused by timing chain exceeds service limit.

CHAIN GUIDE GROOVE DEPTH	
SERVICE LIMIT	1 mm (.039 in)

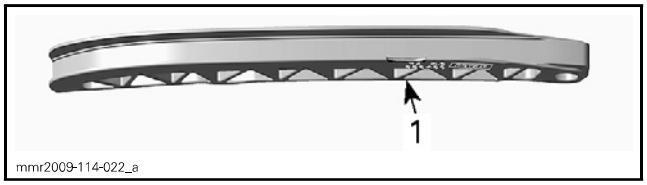

TYPICAL
1. Chain guide

Installing the Chain Guide (Tensioner Side)

Installation is the reverse of the removal procedure however, pay attention to the following details.

1. Insert chain guide.
2. Apply engine oil on bearing pin and install it with M6 threads facing outwards.

NOTICE **Ensure chain guide bearing pin is properly inserted in the chain guide.**

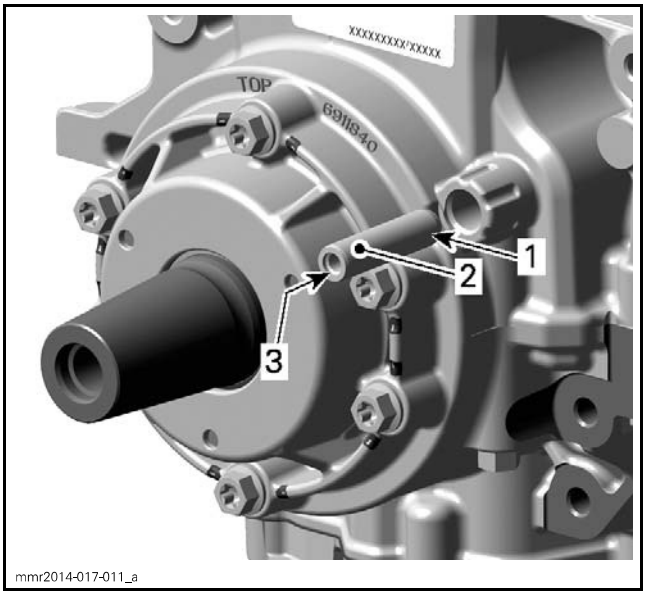

1. Bearing pin
2. Apply engine oil here
3. M6 threads facing outwards

3. Tighten screw plug as specified.

NOTE: Install screw plug only in final assembled cylinder block to avoid warpage of sealing surface.

TIGHTENING TORQUE	
Service product	LOCTITE 243 (BLUE) (P/N 293 800 060)
Screw plug	9 N•m ± 1 N•m (80 lbf•**in** ± 9 lbf•**in**)

4. Properly reinstall camshafts. Refer to *CAMSHAFTS* in the *CYLINDER HEAD* subsection.

NOTICE **Improper camshaft timing will damage engine components.**

CYLINDER HEAD

SERVICE TOOLS

Description	Part Number	Page
CAMSHAFT LOCKING TOOL	529 036 206	11
ENGINE LEAK DOWN TEST KIT	529 035 661	5
VALVE SPRING COMPRESSOR CUP	529 036 209	17
VALVE SPRING COMPRESSOR	529 035 724	17

SERVICE TOOLS – OTHER SUPPLIER

Description	Part Number	Page
SNAP-ON VALVE HOLDER	VL2	20
SNAP-ON VALVE STEM SEAL PLIERS	YA 8230	18

VALVE COVER

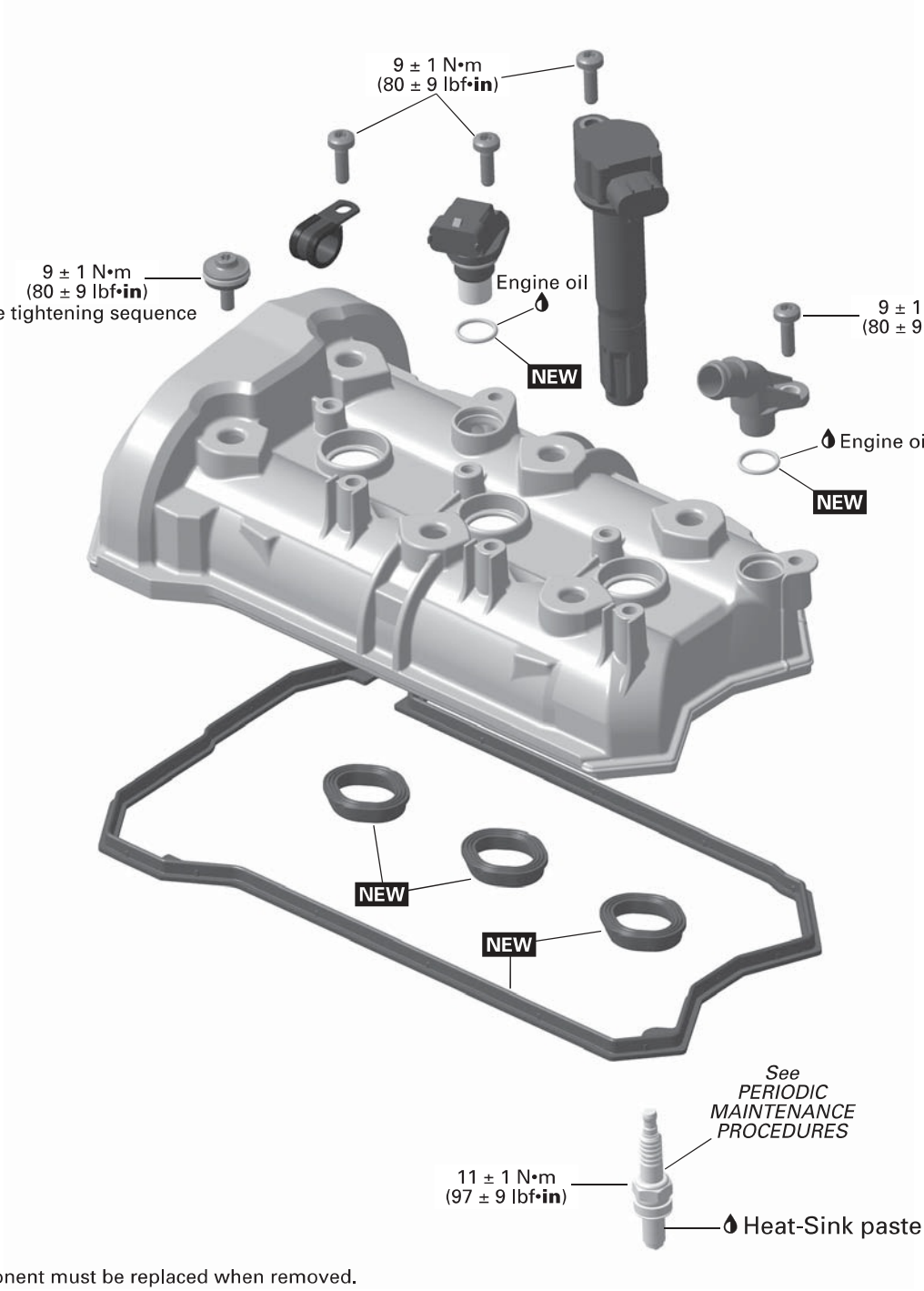

NEW = Component must be replaced when removed.

mmr2014-018-001_b

CAMSHAFTS

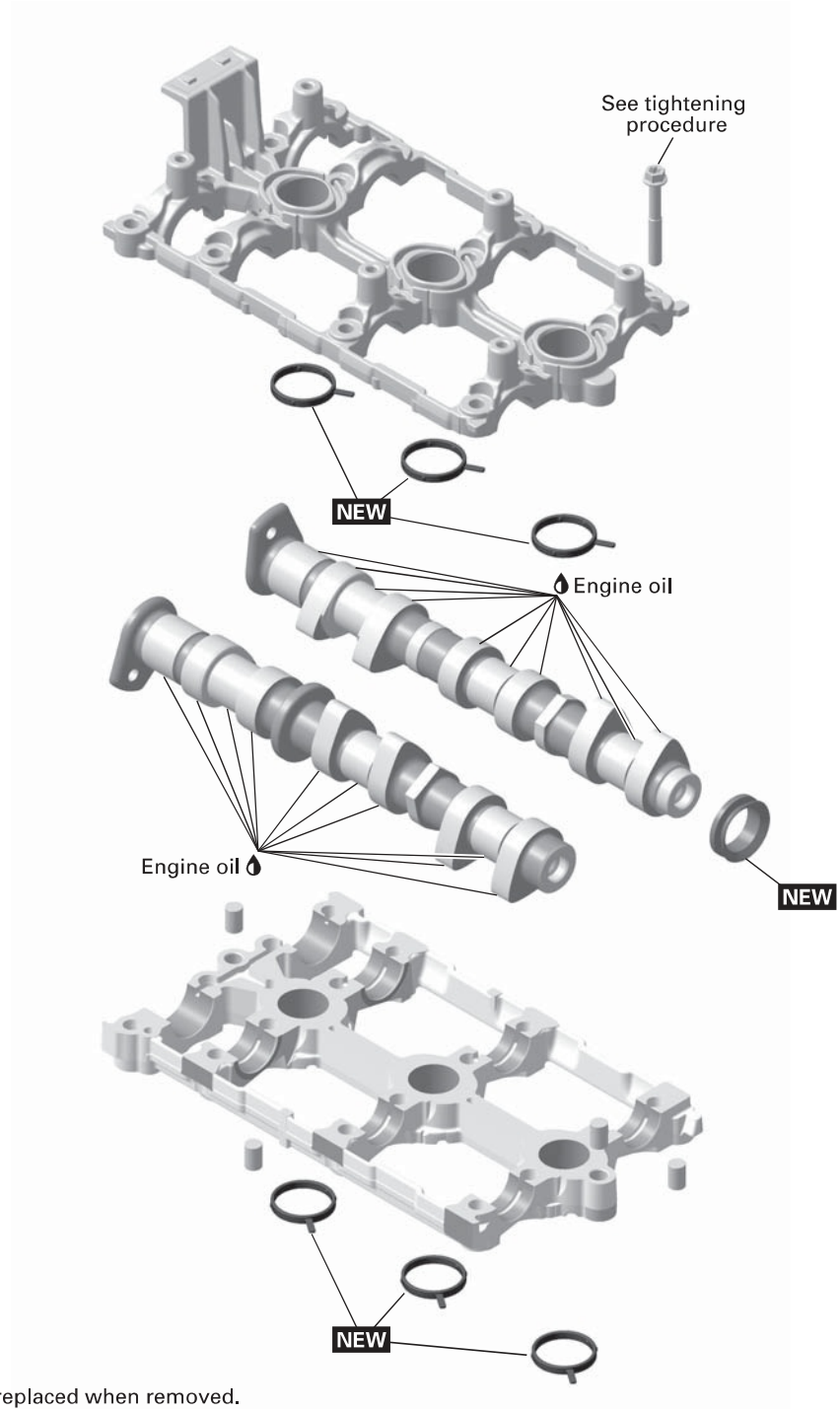

NEW = Component must be replaced when removed.

smr2014-020-002_a

CYLINDER HEAD

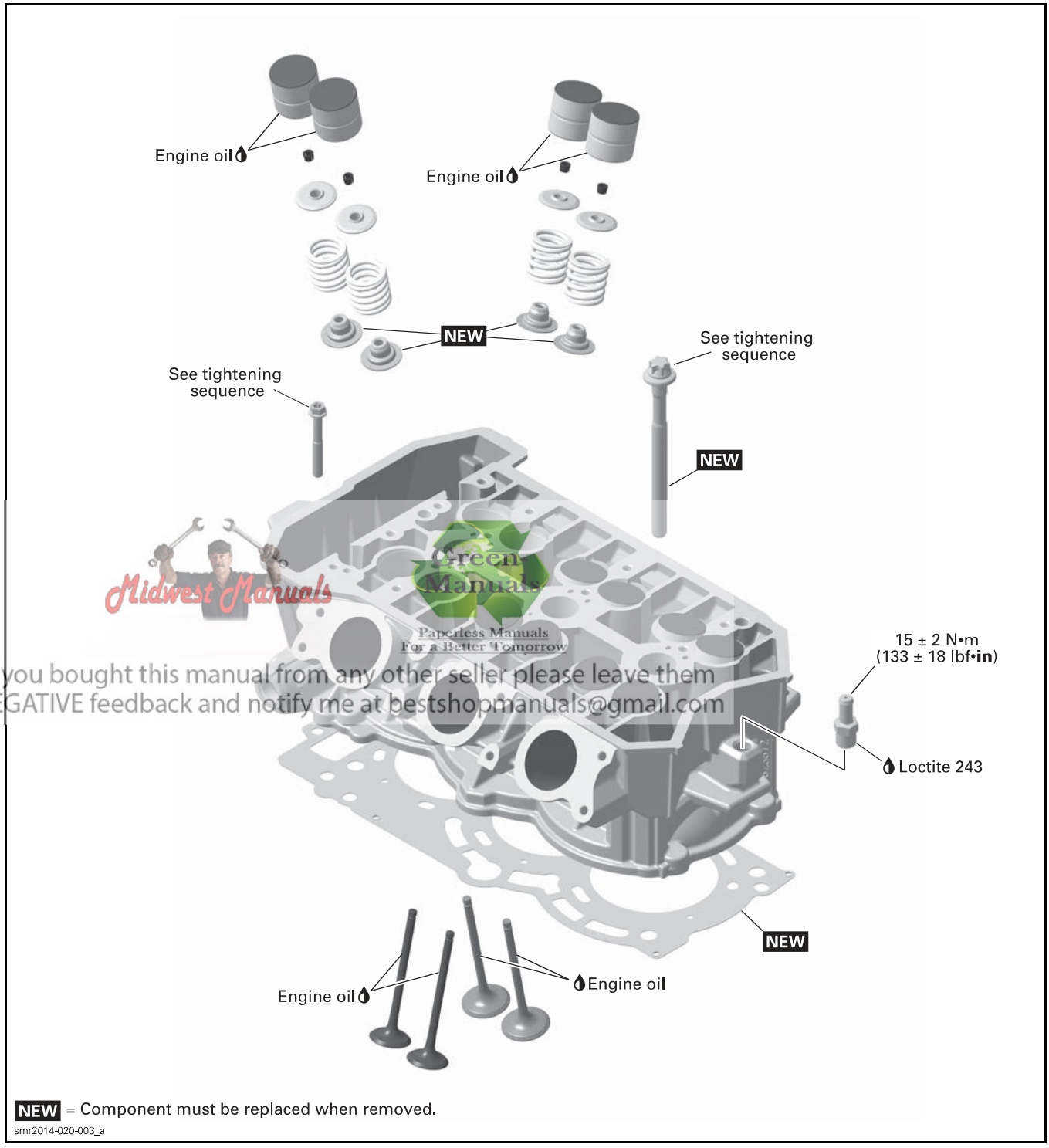

Midwest Manuals
Green Manuals
Paperless Manuals For a Better Tomorrow
If you bought this manual from any other seller please leave them NEGATIVE feedback and notify me at bestshopmanuals@gmail.com

NEW = Component must be replaced when removed.

smr2014-020-003_a

GENERAL

NOTE: For a better understanding, some illustrations are taken with engine out of the vehicle.

Disconnect the battery before working on the engine.

⚠ WARNING

Always disconnect BLACK (-) cable first and reconnect last.

During assembly/installation, use the torque values and service products as in the exploded views.

Clean threads before applying a threadlocker. Refer to *SELF-LOCKING FASTENERS* and *LOCTITE APPLICATION* at the beginning of this manual for complete procedure.

⚠ WARNING

Torque wrench tightening specifications must be strictly adhered to.
Locking devices when removed (e.g.: locking tabs, cotter pin, etc.) must be replaced.

NOTICE **Hoses, cables or locking ties removed during a procedure must be reinstalled as per factory standards.**

When disassembling parts that are duplicated in the engine, (e.g.: valves, springs, etc.), it is strongly recommended to note their position and to keep the parts of the same assembly as a "group". If you find a defective component, it will be much easier to find the cause of the failure. Since parts were break-in together during the engine operation, they will keep their matched fit when parts are reassemble together within their "group".

INSPECTION

CYLINDER LEAK TEST

General

Before performing the cylinder leak test, verify the following:

– Clamp tightness
– Hoses condition.

NOTE: For best accuracy, the leak test should be done with the engine at normal operating temperature.

⚠ CAUTION **Engine parts could be hot.**

NOTE: The following steps are the same for each cylinder.

Preparation

1. Remove an ignition coil and a spark plug. Refer to *IGNITION COILS AND SPARK PLUGS* subsection.
2. Remove the *VALVE COVER*, see procedure in this subsection.
3. Using the drive pulley, turn the engine counterclockwise to bring piston to TDC of compression stoke. Use a dial gauge or a suitable tool to position the piston to TDC.

NOTE: The piston must be set precisely to TDC of compression stroke. If not, the engine will continue to rotate when pressure builds up.

Leak Test

1. Install a gauge adaptor into spark plug hole.

REQUIRED TOOL	
ENGINE LEAK DOWN TEST KIT (P/N 529 035 661)	

2. Connect the leak down tester to an adequate air supply.
3. Set gauge needle to zero.

NOTE: All testers have specific instructions on gauge operation and required pressure. Refer to manufacturer's instructions.

4. Supply combustion chamber with air pressure.
5. Note the amount or percentage of leakage (depending on tester).

LEAKAGE PERCENTAGE	ENGINE CONDITION
0% to 15%	Excellent condition
16% to 25%	Good condition
26% to 40%	Fair condition; reduced engine performance
41% and higher	Poor condition, diagnose and repair engine

Diagnosis

Listen for air leaks.

– Air escaping on intake port or throttle body means leaking intake valve(s).

– Air escaping on exhaust port means leaking exhaust valve(s).
– Air bubbles out of coolant tank means leaking cylinder head gasket.
– Air or coolant escaping from cylinder head means damaged gasket or loosened screws.
– Air escaping into crankcase area means excessively worn cylinder or broken piston rings.
– Air or oil escaping from crankcase means damaged gasket or loosened screws.

Repair Tips

Blue exhaust gas means damaged or worn piston rings or valve stem seals.

White exhaust gas means damaged cylinder head gasket.

Coolant tank cap opening without overheat means damaged cylinder head gasket.

Leaking valves can be caused by carbon deposits or burnt valve face.

Assembly

Reverse the preparation procedure.

TROUBLESHOOTING

Always check for fault codes. If a fault code is detected, service the fault code first. Refer to *DIAGNOSTIC AND FAULT CODES* subsection.

NOTE: When diagnosing an engine problem, always perform the cylinder leak test. This will help pinpoint a problem. Refer to *CYLINDER LEAK TEST* in this subsection.

UNUSUAL ENGINE NOISE OR VIBRATIONS

1. Discharged or defective valve lifters.
   - *Check engine oil pressure, refer to LUBRICATION SYSTEM subsection.*
   - *Replace valve lifters.*
2. Camshaft(s) or camshaft holder(s) worn out.
   - *Check and replace damaged parts.*
3. Faulty chain tensioner.
   - *Replace chain tensioner. Refer to TIMING CHAIN subsection.*
4. Chain guide(s) worn out.
   - *Replace chain guide(s). Refer to TIMING CHAIN subsection.*
5. Stretched timing chain or worn out sprockets.
   - *Replace timing chain and sprockets. Refer to TIMING CHAIN subsection.*
6. Loose timing chain gear screws.
   - *Retighten screws with recommended torque.*
7. Incorrect camshaft timing.
   - *Replace damaged components and readjust camshaft timing.*

OIL LEAKAGE FROM CYLINDER HEAD

1. Leaking valve cover gasket.
   - *Replace valve cover gaskets and retighten valve cover with recommended torque.*
   - *Check valve cover for cracks or other damage.*
2. Leaking spark plug tube O-rings.
   - *Replace spark plug tube O-rings.*
   - *Clean spark plug area from oil spillage.*
3. Blow-by connector is leaking.
   - *Replace blow by connector O-ring.*
4. Leaking cylinder head gasket.
   - *Check cylinder head for damage.*
   - *Replace cylinder head gasket and retighten screws with recommended torquing procedure.*

ENGINE SUDDENLY TURNS OFF OR LACKS ACCELERATION OR POWER

1. Incorrect camshaft timing.
   - *Replace damaged components and readjust camshaft timing.*
2. Leaking intake or exhaust valves.
   - *Perform a CYLINDER LEAK TEST. Repair or replace damaged components.*
3. Broken valve spring(s).
   - *Replace defective parts.*

PROCEDURES

VALVE COVER

Removing the Valve Cover

1. Remove ignition coils. Refer to *IGNITION COILS AND SPARK PLUGS* subsection.
2. Remove screws securing the electrical harness to the valve cover.

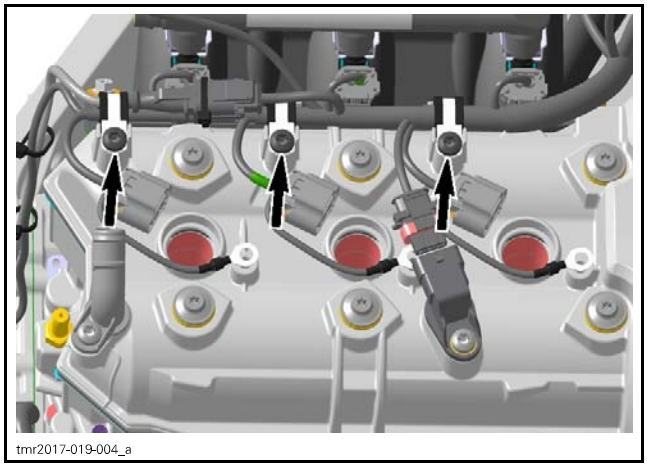
tmr2017-019-004_a

3. Remove valve cover retaining screws.

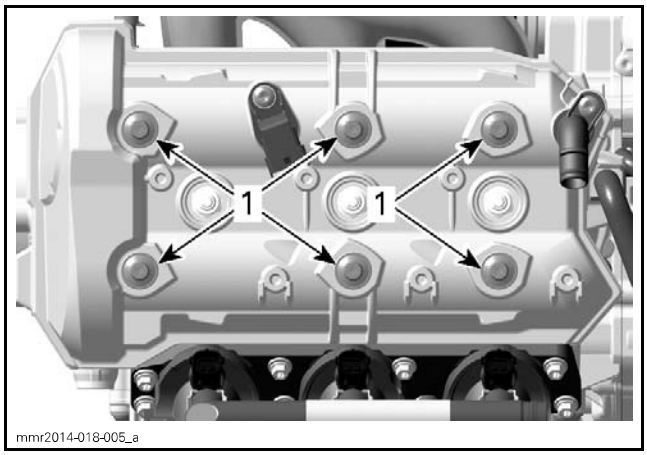

mmr2014-018-005_a

1. Valve cover screws

4. Remove the valve cover.
5. Remove and discard the valve cover gasket and small gaskets around spark plug holes .

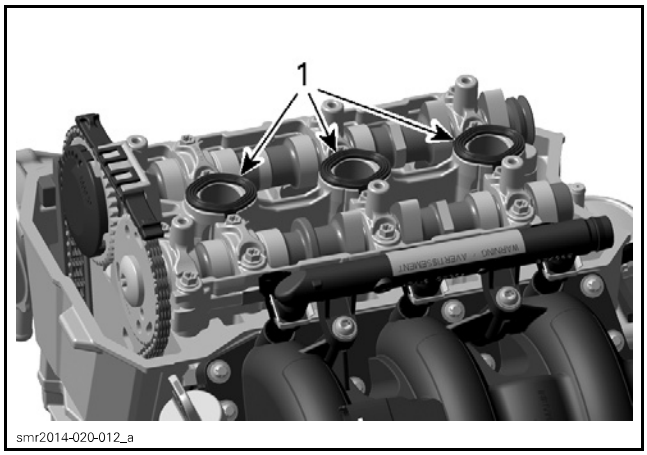

smr2014-020-012_a

1. Spark plug hole gaskets

Inspecting the Valve Cover

Check the valve cover for cracks or other damage.

Replace defective parts.

Installing the Valve Cover

For installation reverse the removal procedure. However, pay attention to the following details.

1. Properly fit the **NEW** small gaskets into the camshaft holder grooves.
2. Properly lay the **NEW** large gasket onto the cylinder head flat surface.
3. Apply engine oil to the sealing surface of the V-ring.

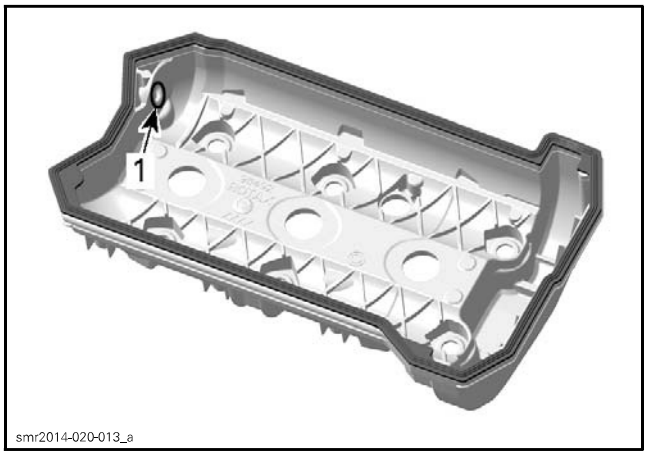

smr2014-020-013_a

INSIDE VALVE COVER
1. Apply engine oil here

4. Install valve cover.

NOTICE **Adhere to the following procedure, otherwise damage to the V-ring will occur causing crankcase venting malfunction.**

4.1 Move the valve cover towards the MAG side.

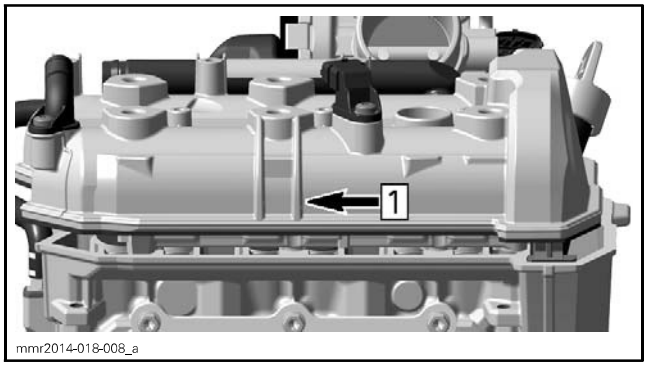

mmr2014-018-008_a

Step 1: Move valve cover towards MAG side

4.2 Put valve cover onto cylinder head.

NOTICE **Make sure the valve cover gasket is well positioned in the cover groove.**

4.3 Push valve cover towards the PTO side to ensure that the V-ring properly seals on sealing surface inside the cover.

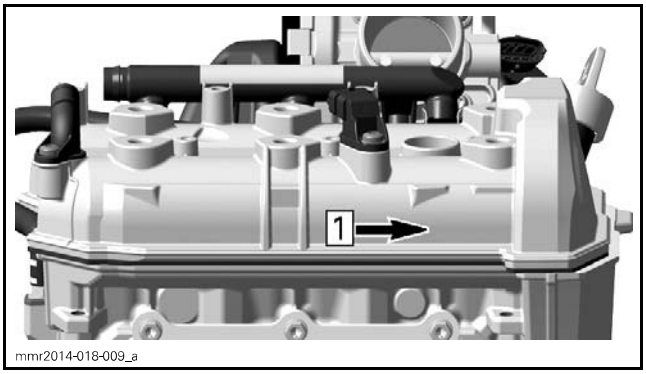

Step 1: Push valve cover towards PTO side

5. Install valve cover screws and tighten as per following sequence:

TIGHTENING TORQUE		
Valve cover screw	Step A	9 N•m ± 1 N•m (80 lbf•**in** ± 9 lbf•**in**)
	Step B	9 N•m ± 1 N•m (80 lbf•**in** ± 9 lbf•**in**)

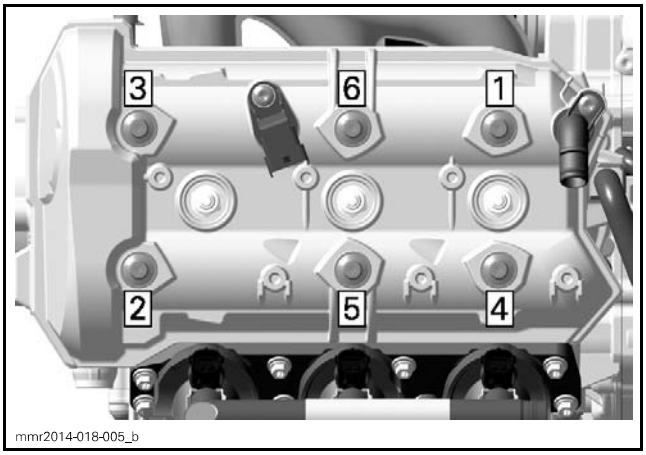

TIGHTENING SEQUENCE

CAMSHAFTS

Removing the Camshaft

1. Remove *VALVE COVER*, see procedure in this subsection.
2. Lock crankshaft, refer to *CRANKSHAFT LOCKING PROCEDURE* in the *CYLINDER BLOCK* subsection.

Remove timing chain tensioner. Refer to *TIMING CHAIN* subsection.

3. Remove:
   3.1 Breather cover

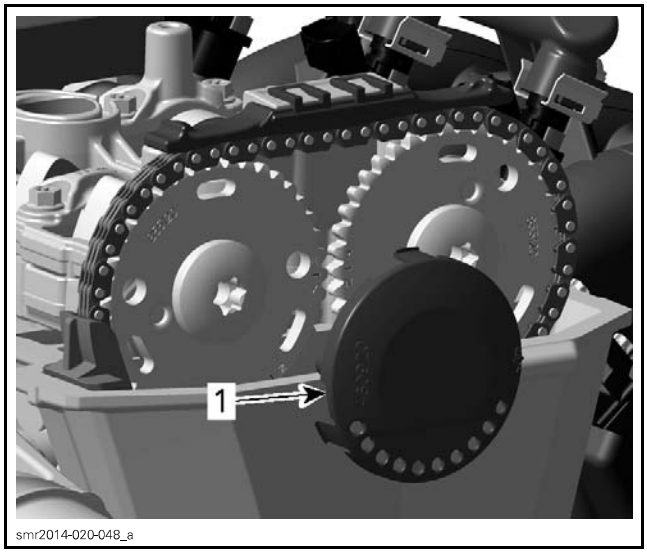

1. Breather cover

   3.2 Upper timing chain guide
   3.3 Timing chain guide.

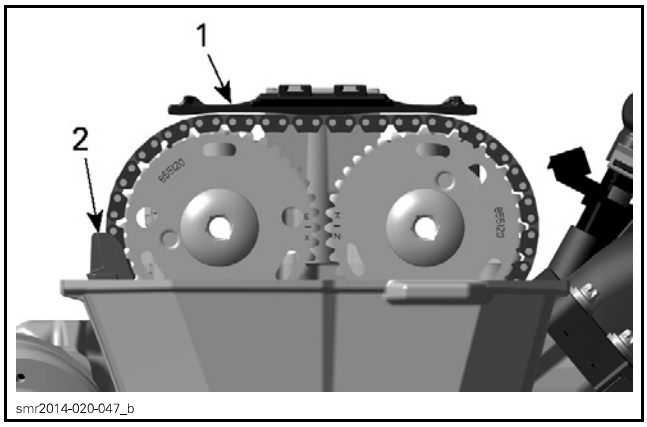

1. Upper timing chain guide
2. Timing chain guide

4. Remove timing chain from camshaft timing gears.
5. Remove camshaft holder retaining screws (x16).

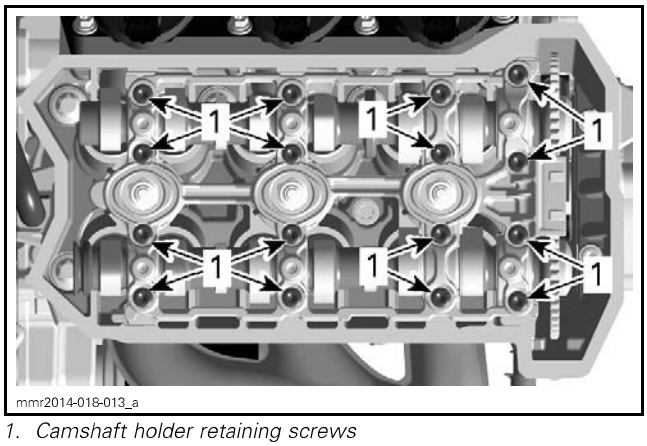

1. Camshaft holder retaining screws

6. Remove the camshaft holder upper half.

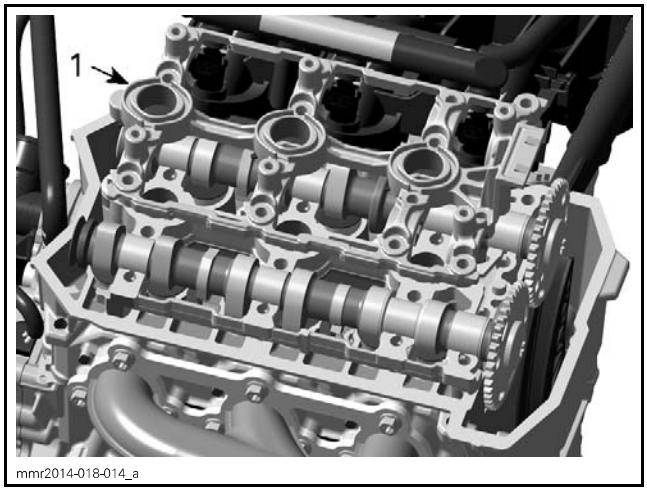

1. Upper half of camshaft holder

7. Put timing chain aside.
8. Remove camshafts with timing gears.

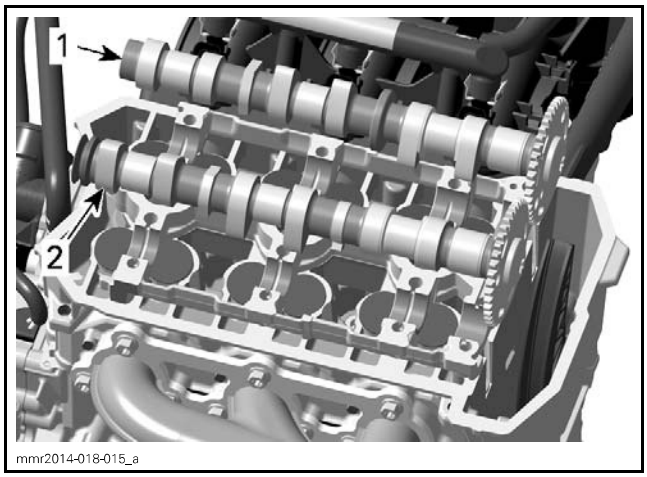

1. Intake camshaft
2. Exhaust camshaft

9. Remove camshaft timing gears only if necessary. Refer to *TIMING CHAIN* subsection.

Inspecting the Camshaft

1. Check each lobe and bearing journal for scoring, scuffing, cracks, or other signs of wear.
2. Check V-ring if it is brittle, hard or otherwise damaged.
3. Measure camshaft bearing journal diameter and lobe height, using a micrometer.

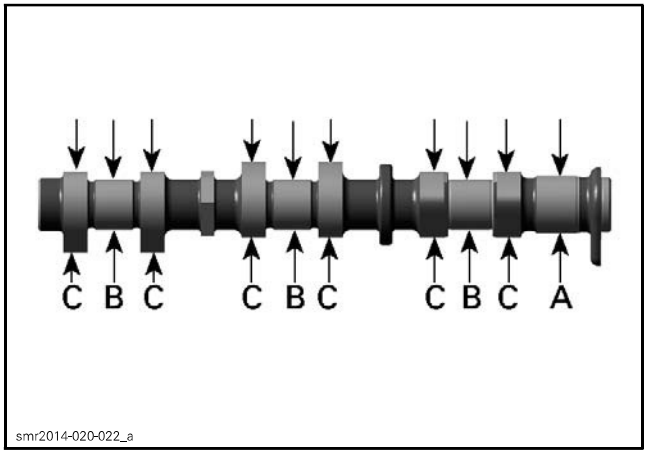

A. Camshaft journal (PTO)
B. Camshaft journal (center and MAG)
C. Camshaft lobes

CAMSHAFT JOURNAL DIAMETER	
PTO JOURNAL (A)	
NEW	25.967 mm to 25.980 mm (1.0223 in to 1.0228 in)
SERVICE LIMIT	25.940 mm (1.0213 in)
CENTER AND MAG JOURNAL (B)	
NEW	22.957 mm to 22.970 mm (.9038 in to .9043 in)
SERVICE LIMIT	22.930 mm (.9028 in)

CAMSHAFT LOBE HEIGHT	
EXHAUST and INTAKE CAMSHAFT (C)	
NEW	38.35 mm to 38.55 mm (1.51 in to 1.518 in)
SERVICE LIMIT	38.33 mm (1.509 in)

Replace parts if necessary.

For camshaft journal radial clearance and camshaft holder bearing diameter refer to *CAMSHAFT HOLDER* in this subsection.

4. Check timing chain guide for wear, cracks or deformation. Replace as required.
5. Replace timing chain guide if any groove caused by timing chain exceeds service limit.

CHAIN GUIDE GROOVE DEPTH	
SERVICE LIMIT	1 mm (.039 in)

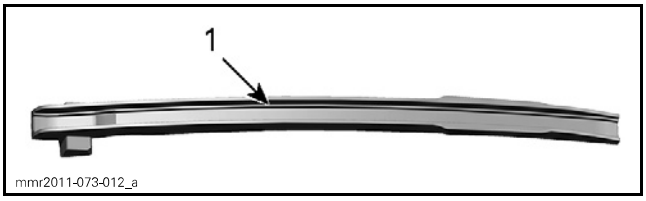

1. Timing chain guide

Installing the Camshaft

The assembly is the reverse of the removal procedure. However pay attention to the following details.

1. Ensure crankshaft is still locked.
2. Apply engine oil on camshaft bearings.

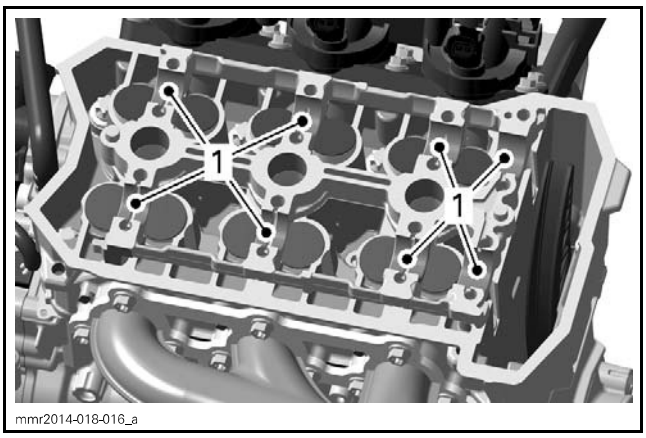

1. Areas where to apply engine oil

NOTE: The camshafts are not identical. Any mix-up of the components would lead to engine damage. The exhaust camshaft has a machined area on MAG side for the V-ring.

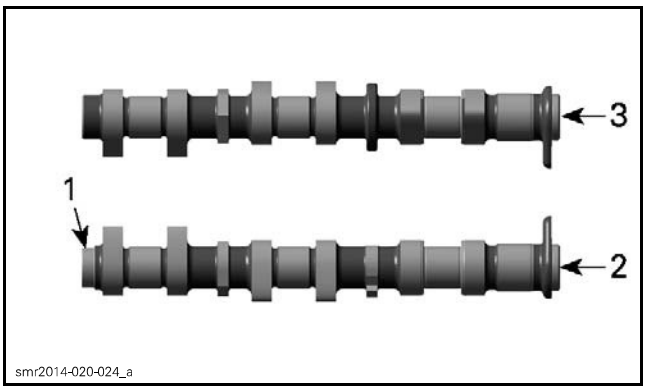

1. Machined area
2. Exhaust camshaft
3. Intake camshaft

3. If removed, reinstall camshaft timing gears on camshafts. Refer to *CAMSHAFT TIMING GEARS* in the *TIMING CHAIN* subsection.
4. Apply engine oil on camshaft journal diameter.
5. Install exhaust camshaft assembly with mark "EX" parallel to cylinder head gasket.

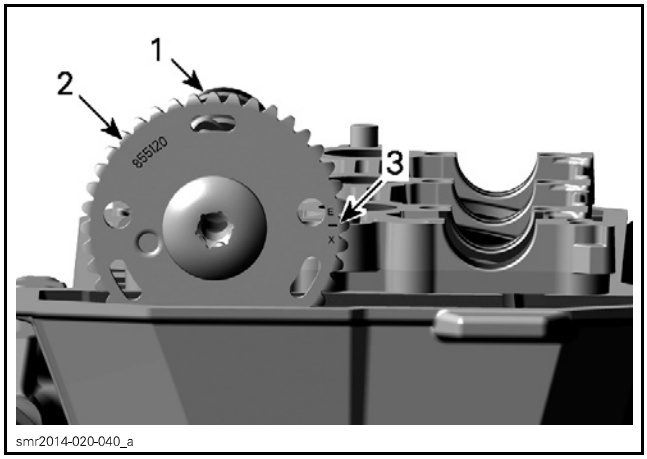

1. Exhaust camshaft
2. Camshaft timing gear
3. Mark "EX"

6. Install intake camshaft assembly with mark "IN" parallel to cylinder head gasket.

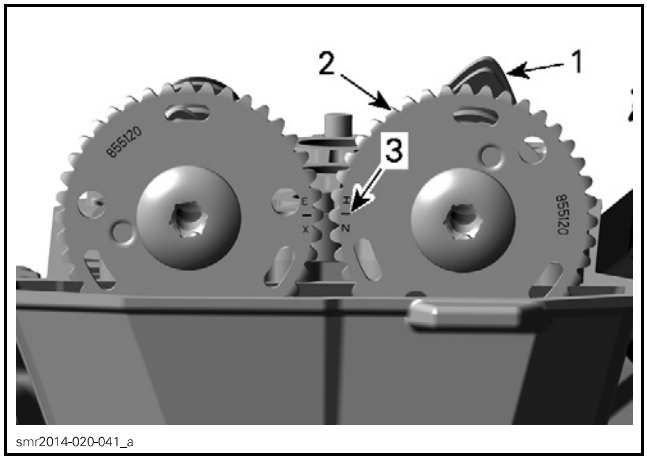

1. Intake camshaft
2. Camshaft timing gear
3. Mark "IN"

7. Install the camshaft holder upper half, then tighten screws as per following sequence:

TIGHTENING TORQUE		
Camshaft holder	Step A	5 N•m ± 0.5 N•m (44 lbf•**in** ± 4 lbf•**in**)

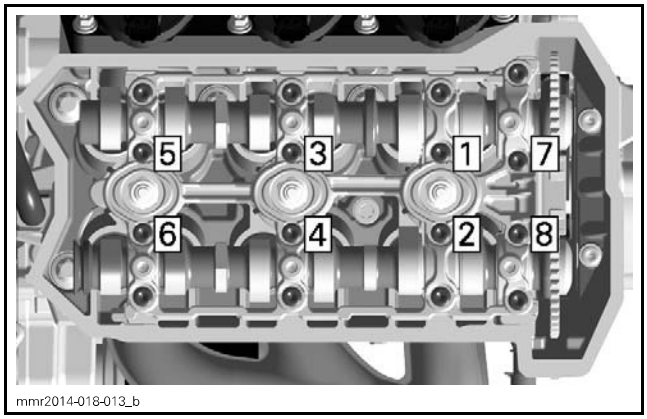

CAMSHAFT HOLDER TIGHTENING SEQUENCE - STEP A

TIGHTENING TORQUE		
Camshaft holder	Step B	9 N•m ± 1 N•m (80 lbf•**in** ± 9 lbf•**in**)

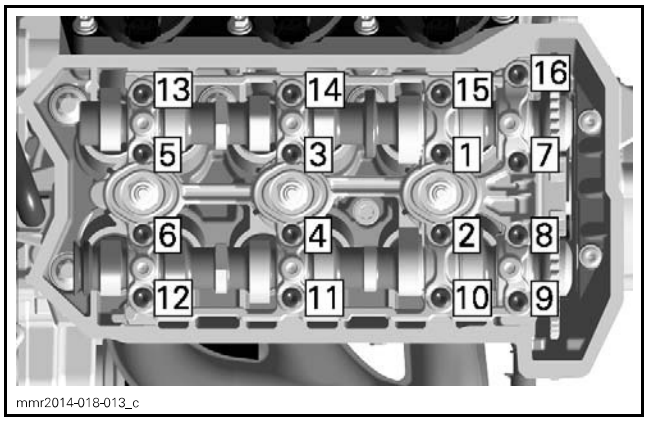

CAMSHAFT HOLDER TIGHTENING SEQUENCE - STEP B

NOTE: After the reassembly of the camshafts is completed, check if camshafts can be turned easily.

8. Lock camshafts.

REQUIRED TOOL	
CAMSHAFT LOCKING TOOL (P/N 529 036 206)	

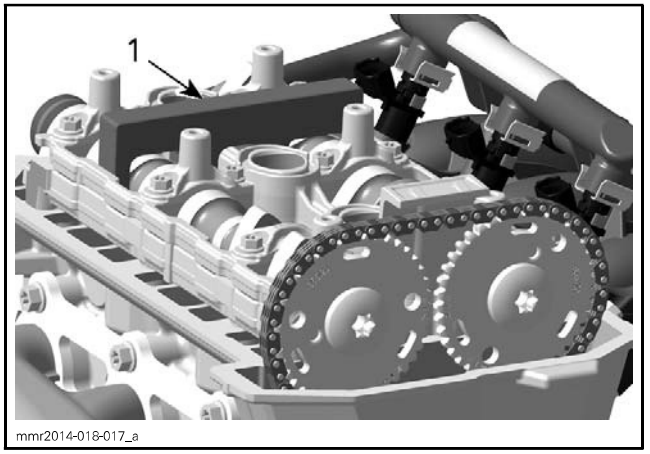

1. Camshaft locking tool

9. Lift timing chain out of timing chain compartment.
10. Pull timing chain up on exhaust side and install it on the exhaust camshaft timing gear.

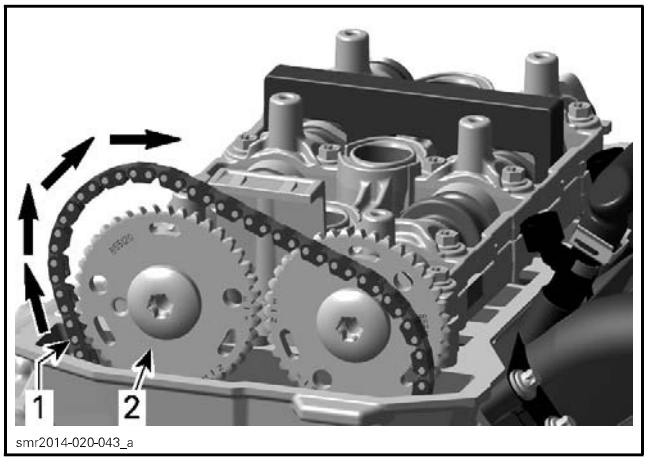

1. Timing chain
2. Exhaust camshaft timing gear

11. Pull timing chain towards intake side and install it on the intake camshaft timing gear.

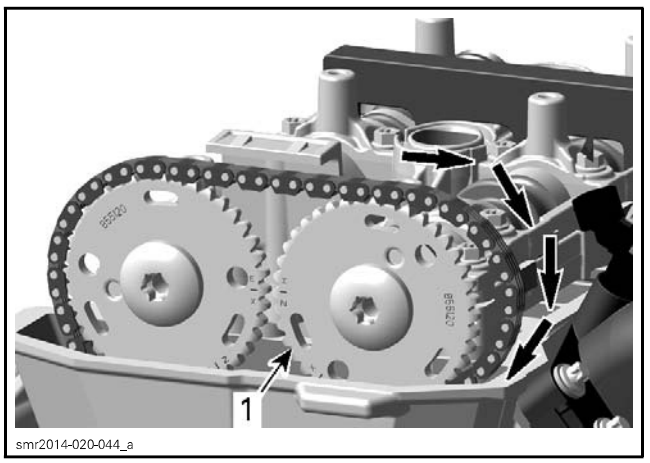

1. Intake camshaft timing gear

12. Install timing chain guide.

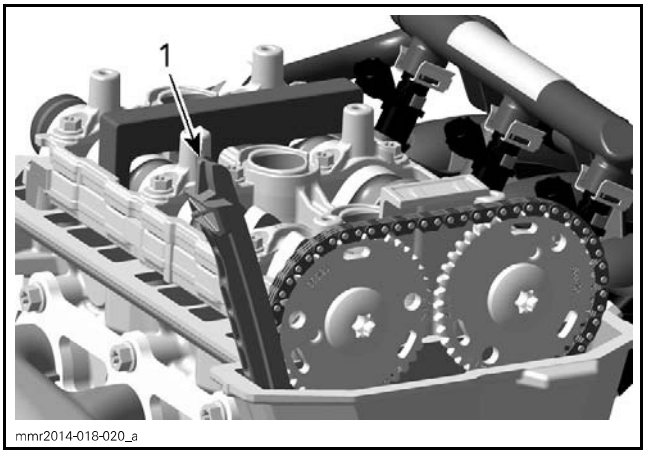

1. Timing chain guide

13. Install upper timing chain guide on camshaft holder.

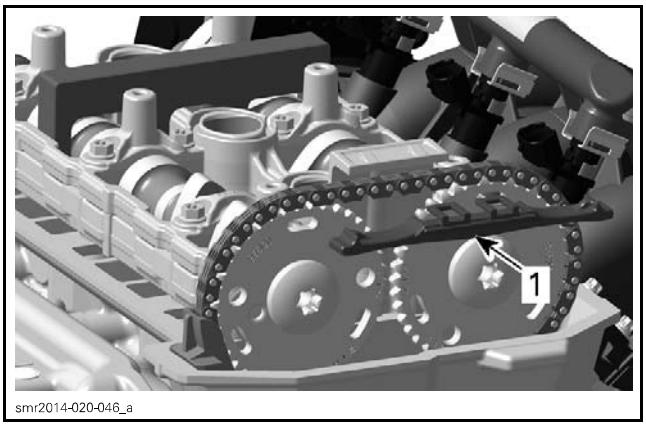

1. Upper timing chain guide

14. Install *TIMING CHAIN TENSIONER*, refer to *TIMING CHAIN* subsection.

15. Ensure marks on camshaft timing gears are still aligned. If not, repeat procedure.

NOTICE **After installation of timing chain tensioner, the marks "IN" on intake and "EX" on exhaust camshafts must be aligned.**

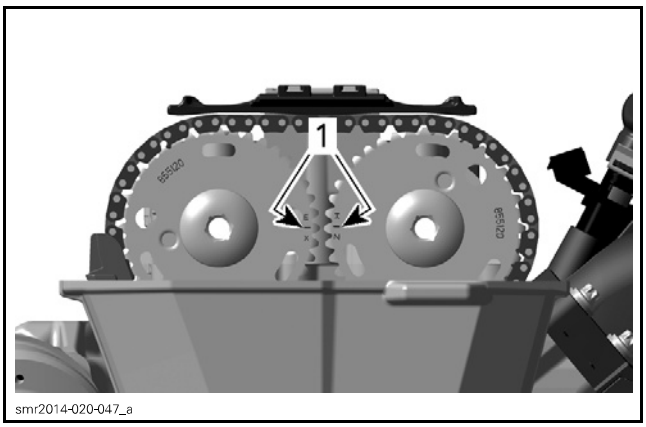

CAMSHAFT TIMING GEARS
1. Marks must be aligned

16. Install breather cover.

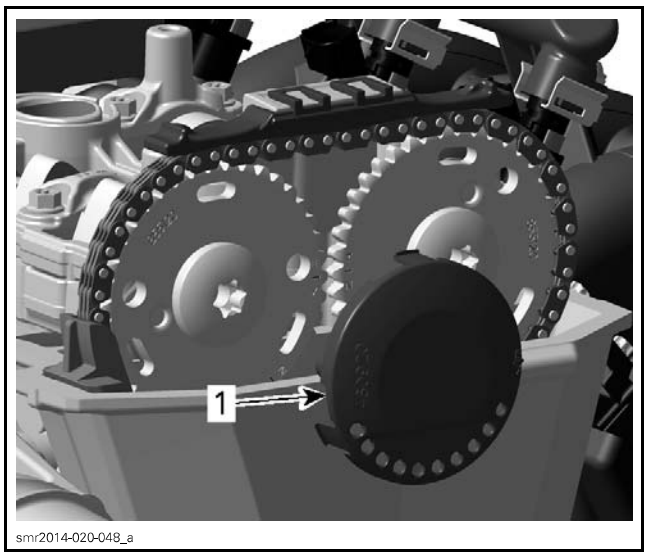

1. Breather cover

17. Remove camshaft locking tool.

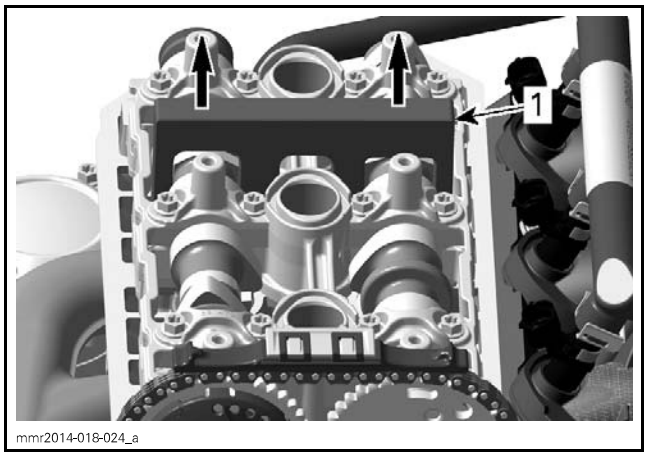

1. Camshaft locking tool removal

18. Remove crankshaft locking tool.

CAMSHAFT HOLDER

Removing the Camshaft Holder

Remove camshafts, see procedure in this subsection.

Remove the camshaft holder lower half with gaskets from cylinder head.

Remove and discard gaskets from camshaft holder halves.

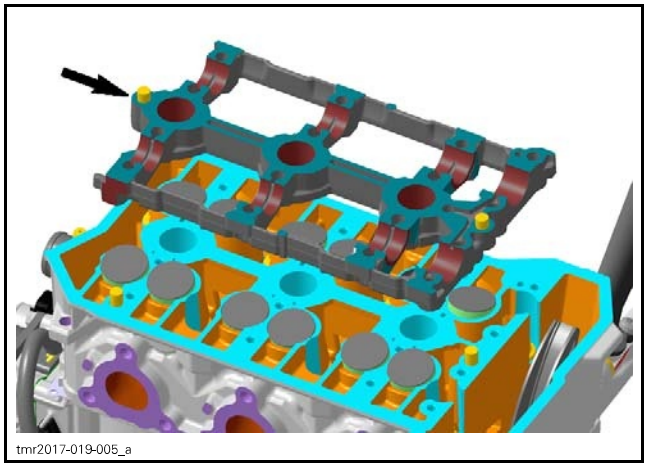
tmr2017-019-005_a

Inspecting the Camshaft Holder

1. Check camshaft holder for scoring, scuffing, cracks, or other signs of wear.
2. Make sure oil orifices are not clogged. Blow them out with pressurized air.

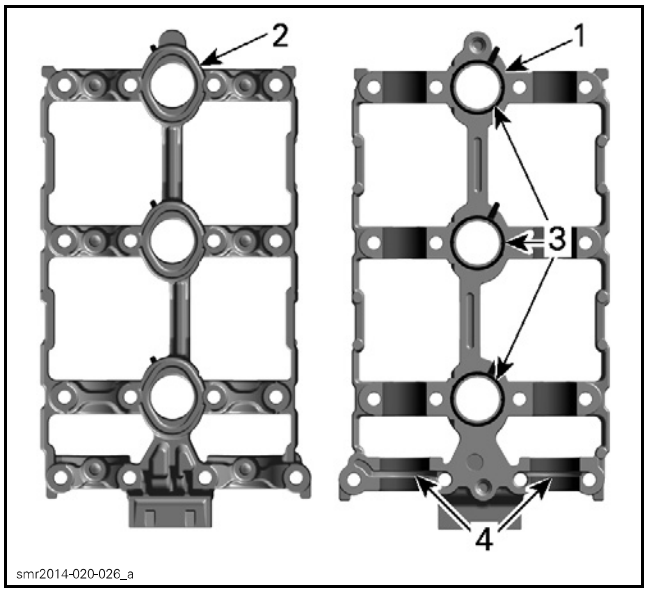

smr2014-020-026_a

1. Camshaft holder upper half - view from beneath
2. Camshaft holder upper half - view from above
3. Gaskets
4. Oil orifices

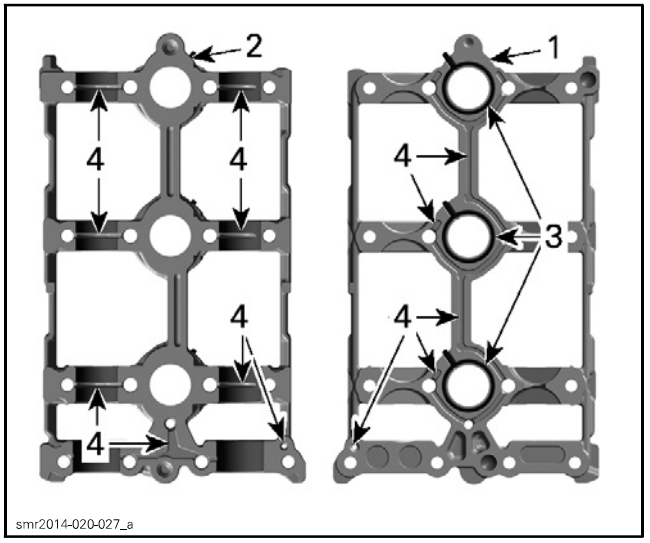

smr2014-020-027_a

1. Camshaft holder lower half - view from beneath
2. Camshaft holder lower half - view from above
3. Gaskets
4. Oil orifices

Install camshaft holder on cylinder head.

Tighten camshaft holder screws to specification, refer to *INSTALLING THE CAMSHAFT* in this subsection.

Measure camshaft holder bearing diameter.

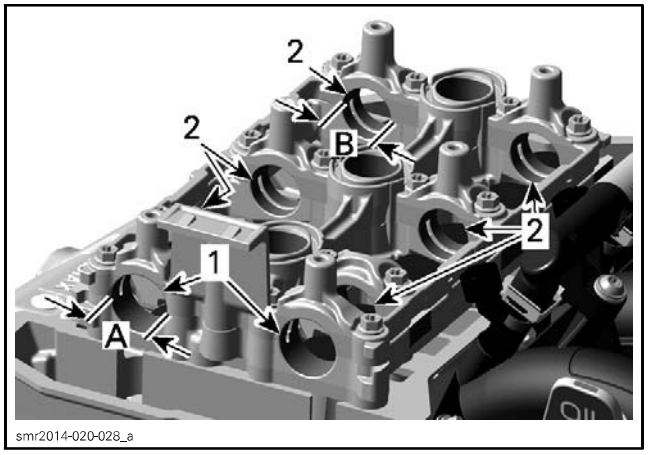

smr2014-020-028_a

CAMSHAFT HOLDER BEARINGS
1. PTO bearings
2. Center and MAG bearings
A. Diameter PTO bearing
B. Diameter center and MAG bearing

CAMSHAFT HOLDER BEARING DIAMETER	
PTO BEARING	
NEW	26.000 mm to 26.021 mm (1.024 in to 1.024 in)
SERVICE LIMIT	26.050 mm (1.026 in)
CENTER AND MAG BEARING	
NEW	23.000 mm to 23.021 mm (.906 in to .906 in)
SERVICE LIMIT	23.050 mm (.907 in)

Measure clearance between camshaft journals and camshaft holder, using the plastic feeler gauge.

NOTE: The plastic feeler gauge is available at automotive parts retailer.

Install camshaft holder lower half on cylinder head.

Place the camshafts in the camshaft holder lower half and apply a plastic-gauge on the camshaft bearing journal.

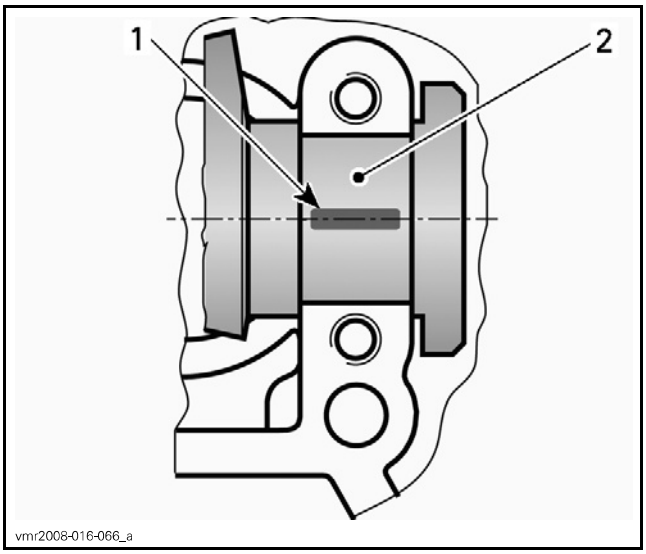

TYPICAL
1. *Plastic gauge*
2. *Camshaft bearing journal*

Install camshaft holder upper half in the proper position and tighten screws to specification, refer to *INSTALLING THE CAMSHAFT* in this subsection.

Unfasten camshaft holder.

Measure the maximum width of the pressed plastic gauge with the corresponding graduated scale.

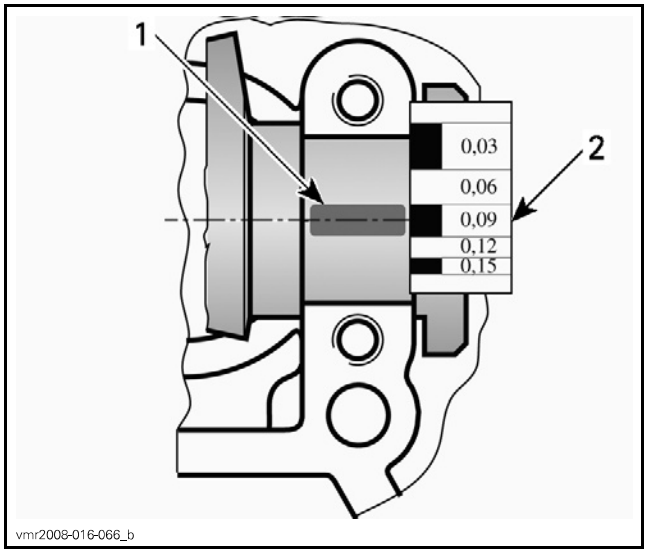

TYPICAL
1. *Pressed plastic gauge*
2. *Graduated scale*

CAMSHAFT JOURNAL RADIAL CLEARANCE	
PTO, CENTER AND MAG BEARING	
NEW	0.020 mm to 0.054 mm (.001 in to .002 in)
SERVICE LIMIT	0.080 mm (.003 in)

Replace parts if necessary.

Installing the Camshaft Holder

Install camshaft holder lower half.

Continue procedure as explained in *INSTALLING THE CAMSHAFT* in this subsection.

HYDRAULIC VALVE LIFTERS

Removing the Hydraulic Valve Lifter

NOTE: Hydraulic valve lifter are maintenance free.

See procedures in this subsection to remove:
- Valve cover
- Camshafts
- Camshaft holder.

Pull hydraulic valve lifter off the cylinder head.

NOTE: When disassembling the hydraulic valve lifter, it is strongly recommended to note their original position.

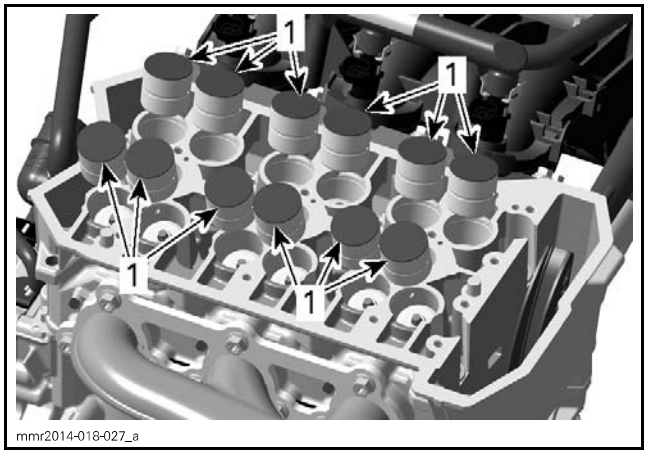

1. Hydraulic valve lifter

Inspecting the Hydraulic Valve Lifter

1. Check surface of hydraulic valve lifter for scoring or other damage.
2. Measure valve lifter diameter. Replace if out of specification.

HYDRAULIC VALVE LIFTER	
NEW	28.354 mm to 28.370 mm (1.1163 in to 1.1169 in)
SERVICE LIMIT	28.340 mm (1.1157 in)
HYDRAULIC VALVE LIFTER RADIAL CLEARANCE	
SERVICE LIMIT	0.100 mm (.0039 in)

Installing the Hydraulic Valve Lifter

For installation reverse the removal procedure. However pay attention to the following details.

1. Apply engine oil on the outside diameter of the hydraulic valve lifter.

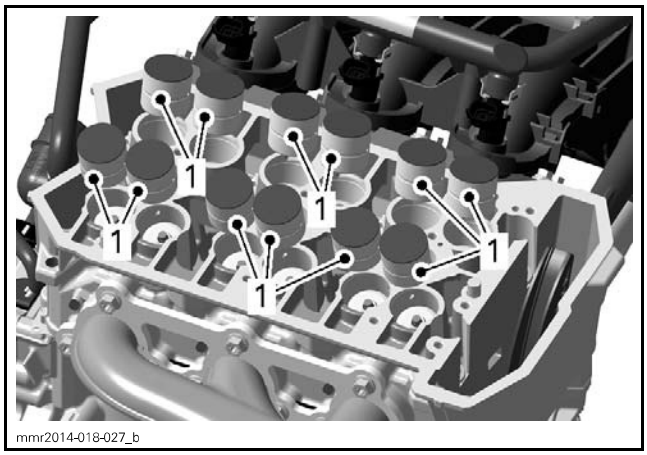

1. Apply engine oil on outer diameter

CYLINDER HEAD

Removing the Cylinder Head

1. Remove the engine from the vehicle. Refer to *ENGINE REMOVAL AND INSTALLATION* subsection.
2. Remove the following components, see procedures in this subsection.
   - Valve cover
   - Camshafts
   - Camshaft holder
   - Hydraulic valve lifters.
3. Remove M6 cylinder head screws.

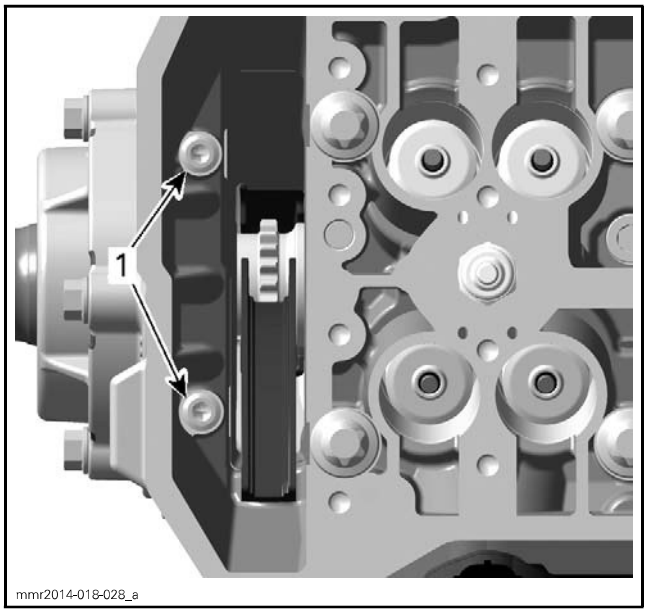

1. Remove M6 cylinder head screws

4. Remove and discard M9 cylinder head screws.

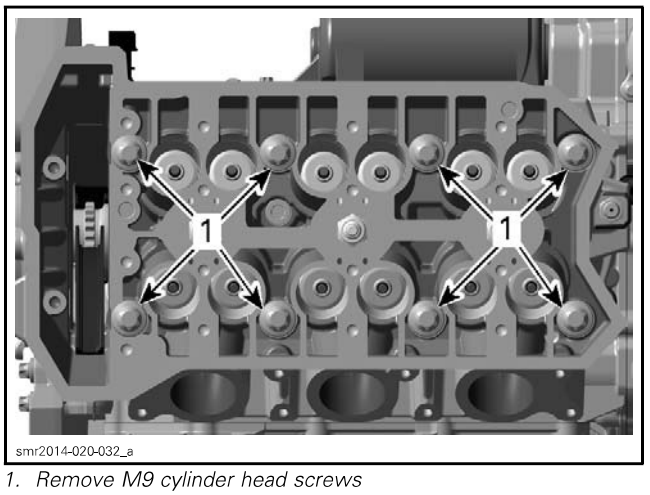

1. Remove M9 cylinder head screws

5. Pull cylinder head off the cylinder block.
6. Remove and discard cylinder head gasket.

Cleaning the Cylinder Head

1. Remove carbon deposits from combustion chambers, exhaust ports and piston tops.
2. Clean cylinder head, especially cylinder head screw surface from oil spillage.
3. Blow out the oil orifices with pressurized air and make sure they are not clogged.

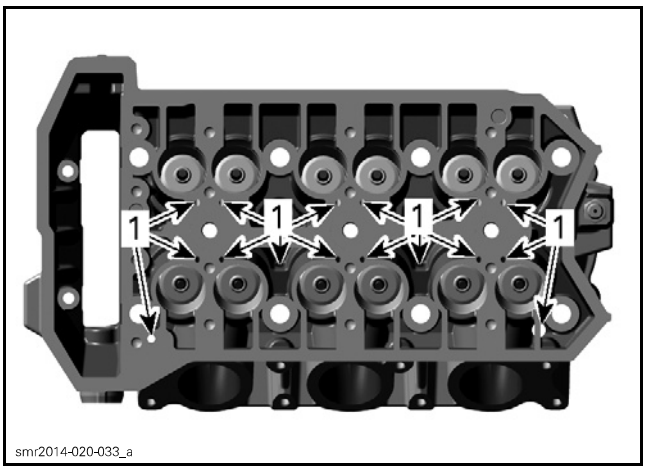

1. Oil orifices

Inspecting the Cylinder Head

Check for cracks between valve seats or other damage, if so, replace cylinder head.

Check cylinder head mating surface for flatness using a straight edge.

Check hydraulic valve lifter bores for scoring or other damage, if so, replace cylinder head.

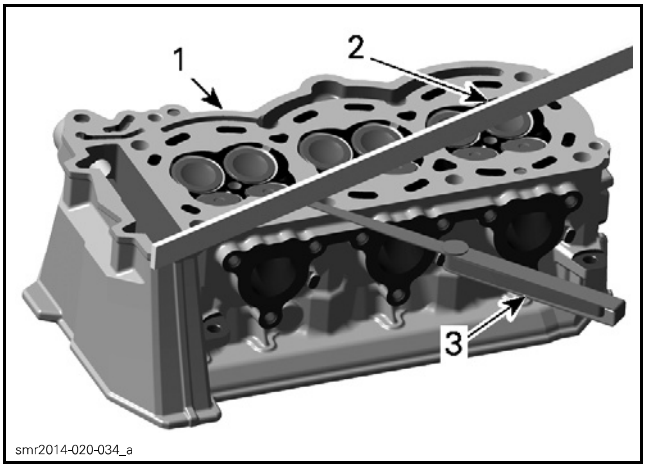

1. Cylinder head
2. Straight edge
3. Feeler gauge

Check cylinder head warpage.

CYLINDER HEAD WARPAGE	
SERVICE LIMIT	0.15 mm (.0059 in)

If warpage exceeds specification, resurface the cylinder head as follows.

Use a 400 - 600 grit wet sandpaper on a surface plate and gently grind off the mating surface.

NOTE: To ensure an even surface, rotate cylinder head several times during resurfacing.

Replace cylinder head, if resurfacing fails.

Installing the Cylinder Head

For installation, reverse the removal procedure. However, pay attention to the following details.

1. Install a NEW cylinder head gasket.

NOTICE **Each installation of the cylinder head requires a NEW cylinder head gasket. Using a gasket twice would cause engine damage.**

2. Install cylinder head on the cylinder block.
3. Install NEW M9 cylinder head screws.

NOTICE **This assembly uses stretch screws. Always use NEW screws and strictly adhere to the tightening procedure.**

4. Tighten cylinder head screws as follows:

NOTE: Always perform step A on all M9 cylinder head screws before going to the step B.

TIGHTENING TORQUE		
Cylinder head screws - M9	Step A	20 N•m ± 2 N•m (15 lbf•ft ± 1 lbf•ft)
	Step B	Additional 150° ± 5°

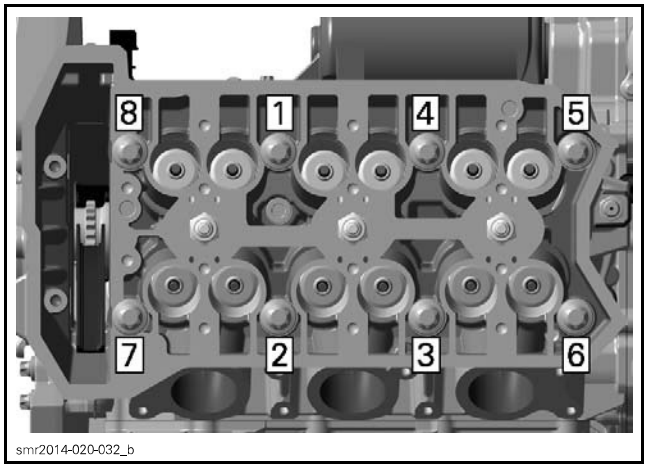

M9 SCREWS TIGHTENING SEQUENCE

NOTE: Use a torque angle gauge to carry out the step B.

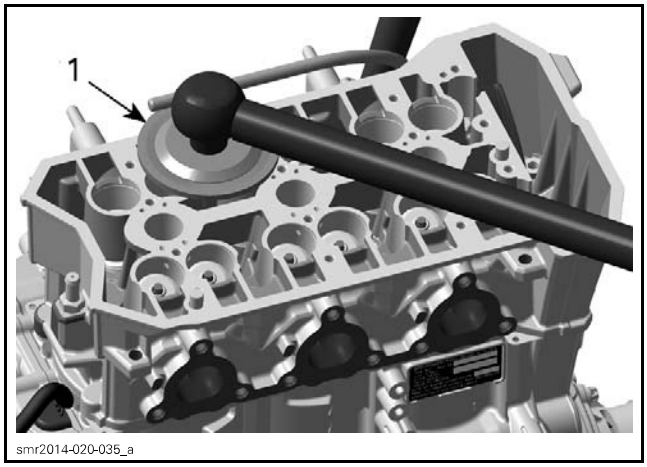

1. Torque angle gauge

5. Install M6 screws. Tighten as follows.

TIGHTENING TORQUE	
Cylinder head screws - M6	9 N•m ± 1 N•m (80 lbf•**in** ± 9 lbf•**in**)

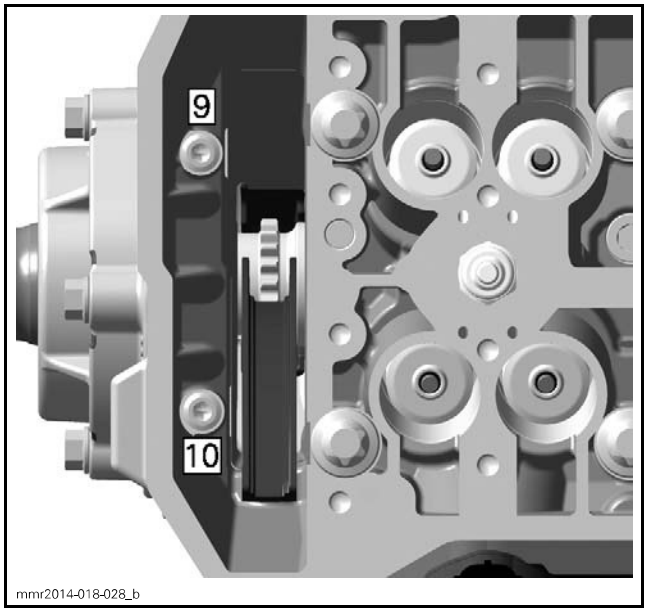

M6 SCREWS TIGHTENING SEQUENCE

VALVE SPRINGS

Removing the Valve Spring

1. Remove *CYLINDER HEAD*, see procedure in this subsection.
2. Compress valve spring.

REQUIRED TOOLS	
VALVE SPRING COMPRESSOR (P/N 529 035 724)	
VALVE SPRING COMPRESSOR CUP (P/N 529 036 209)	

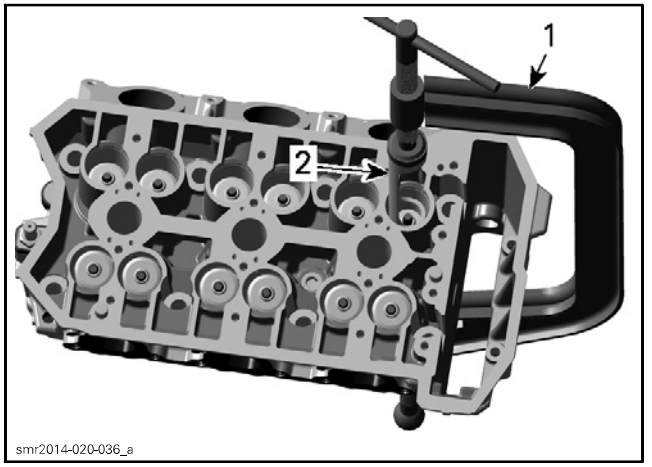

1. Valve spring compressor clamp
2. Valve spring compressor cup

3. Remove valve cotters.
4. Withdraw valve spring compressor tools.
5. Remove valve spring retainer and valve spring.

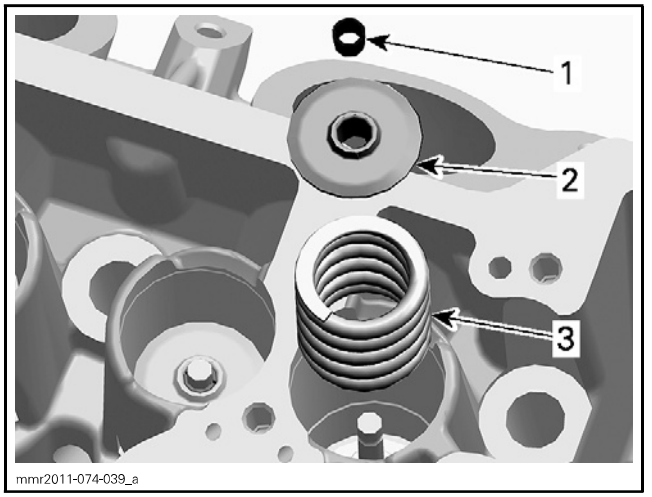

1. Valve cotters
2. Valve spring retainer
3. Valve spring

NOTE: Identify the position of each part very carefully, so it can be reinstalled in its original place.

Inspecting the Valve Spring

1. Check valve spring for rust, corrosion or other visible damage.
2. Check valve spring free length and straightness.

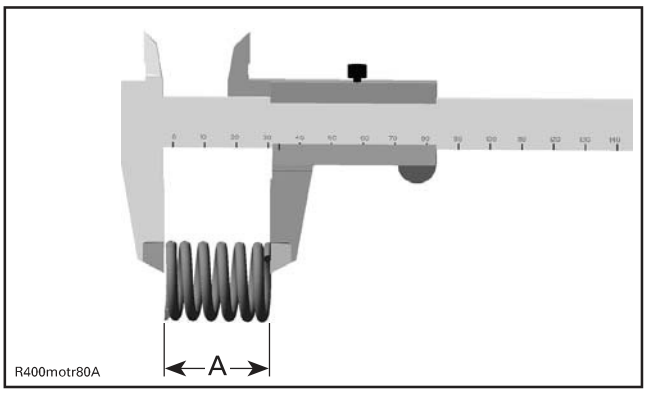

A. Spring free length

VALVE SPRING FREE LENGTH	
NEW	31.35 mm (1.2343 in)
SERVICE LIMIT	29.50 mm (1.1614 in)

Replace valve spring, if out of specification.

Installing the Valve Spring

For installation, reverse the removal procedure. Pay attention to the following details.

NOTE: Ensure to reinstall all parts in their original position as marked during removal.

1. Apply some grease on valve cotters, so that they remain in place while releasing the valve spring.
2. Make sure valve cotters are properly engaged into valve stem groove.

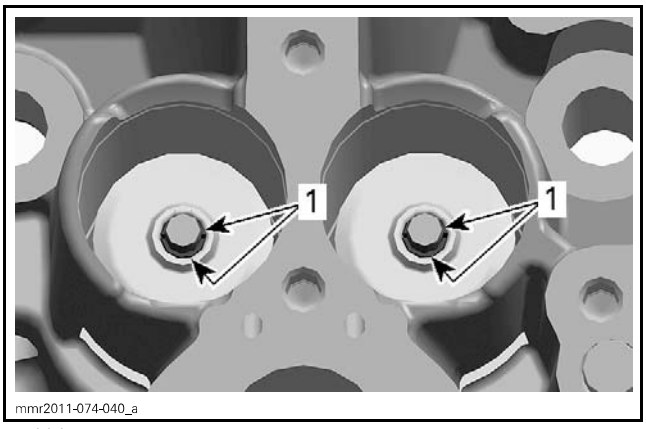

1. Valve cotters

3. After spring is installed, ensure it is properly locked by lightly tapping on valve stem end with a soft punch and a hammer so that valve opens and closes a few times.

NOTICE **Improperly locked valve spring will cause severe engine damage and hitting the valve stem end with excessive force could damage the valve.**

VALVES

Removing the Valve

1. Remove *VALVE SPRING*, see procedure in this subsection.
2. Push on the valve stem, then pull valves out of cylinder head.

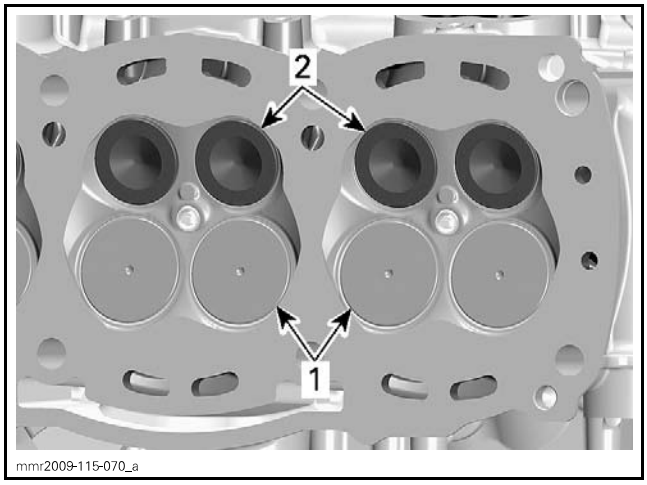

1. Intake valves 29 mm
2. Exhaust valves 25 mm

3. Remove and discard valve stem seal.

REQUIRED TOOL	
SNAP-ON VALVE STEM SEAL PLIERS (P/N YA 8230)	

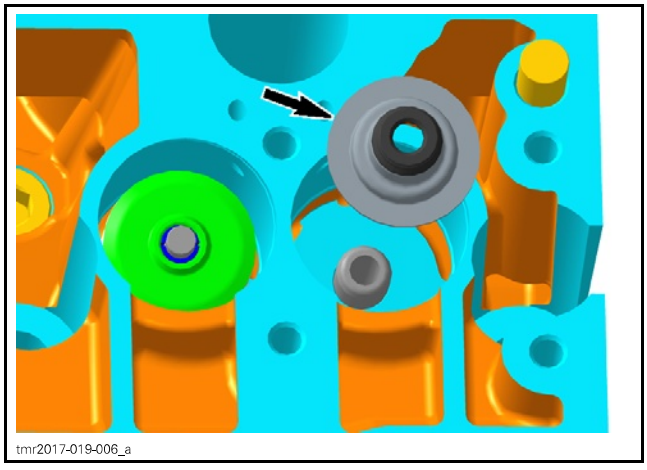

NOTE: Identify the position of each part very carefully, so it can be reinstalled in its original place.

Inspecting the Valve

Inspect valve surface, check for abnormal stem wear and bending.

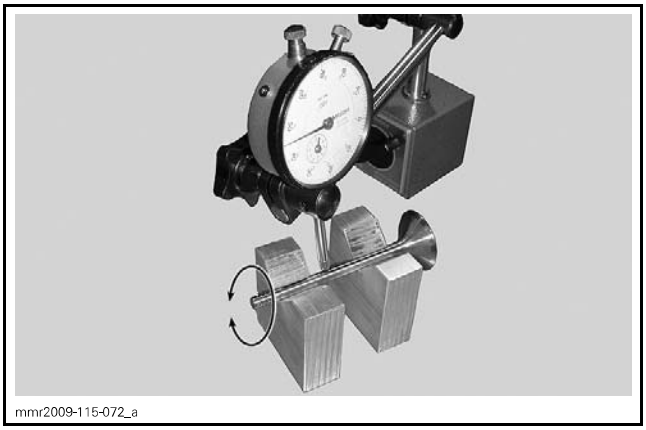
mmr2009-115-072_a

VALVE OUT OF ROUND INTAKE AND EXHAUST VALVE	
NEW	0.005 mm (.0002 in)
SERVICE LIMIT	0.060 mm (.0024 in)

Replace valve if out of specification.

Valve Stem and Valve Guide Clearance

1. Measure valve stem at three places, using a micrometer.

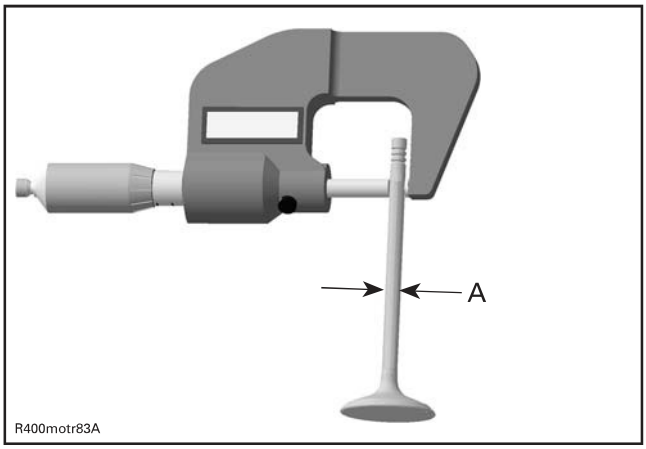

R400motr83A

A. Valves stem diameter

VALVE STEM DIAMETER	
INTAKE VALVE	
NEW	4.958 mm to 4.972 mm (.1952 in to .1957 in)
SERVICE LIMIT	4.940 mm (.1945 in)
EXHAUST VALVE	
NEW	4.956 mm to 4.970 mm (.1951 in to .1957 in)
SERVICE LIMIT	4.940 mm (.1945 in)

Replace valve if stem is out of specification or if its surface is damaged or worn.

2. Clean valve guide from carbon deposits.

3. Measure valve guide inner diameter, using a small bore gauge.

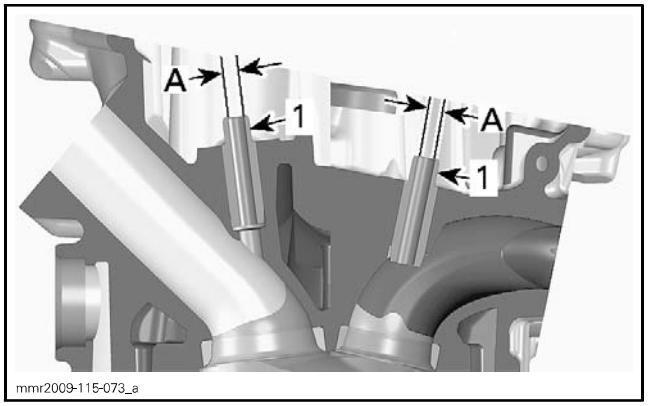

mmr2009-115-073_a

1. Valve guides
A. Valve guide inner diameter

VALVE GUIDE INNER DIAMETER	
NEW	5.000 mm to 5.012 mm (.1969 in to .1973 in)
SERVICE LIMIT	5.050 mm (.1988 in)

Replace cylinder head, if valve guide is out of specification.

Valve Face and Seat

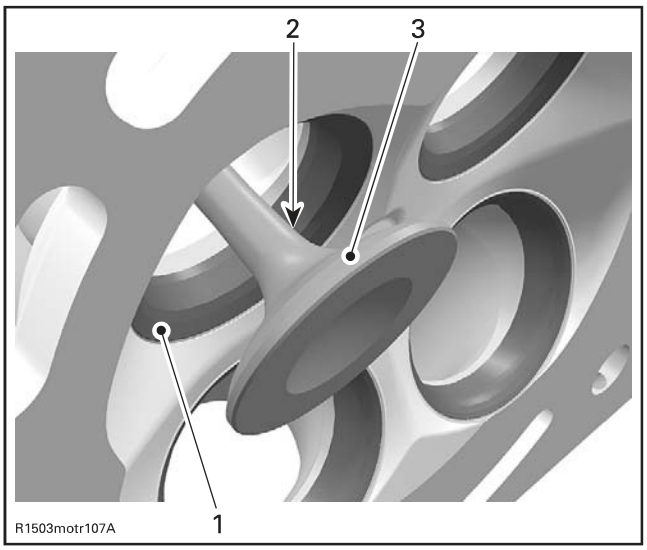

R1503motr107A

TYPICAL
1. Valve seat
2. Exhaust valve contaminated area
3. Valve face (contact surface to valve seat)

1. Check valve face and seat for burning, pitting and other signs of damage.
2. Check if valve seats properly in cylinder head. Proceed as follows.
   2.1 Apply some lapping compound on valve face and work valve on its seat with a lapping tool.

REQUIRED TOOL
SNAP-ON VALVE HOLDER (P/N VL2)

NOTE: The location of contact area should be in center of valve face.

2.2 Repeat procedure until valve seat and valve face fit together.

3. Measure valve seat contact width, using a caliper.

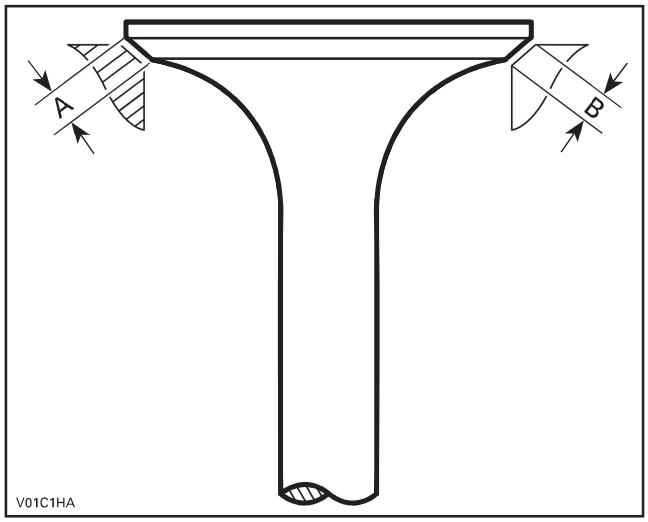

A. Valve face contact width
B. Valve seat contact width

VALVE SEAT CONTACT WIDTH (B)	
INTAKE VALVE	
NEW	1.05 mm to 1.35 mm (.041 in to .053 in)
SERVICE LIMIT	1.70 mm (.067 in)
EXHAUST VALVE	
NEW	1.25 mm to 1.45 mm (.049 in to .057 in)
SERVICE LIMIT	1.80 mm (.071 in)

Replace parts if out of specification.

Installing the Valve

For installation reverse the removal procedure. Pay attention to the following details.

NOTICE Ensure to reinstall all parts in their original position as marked during removal.

1. Install a NEW valve stem seal whenever valve is removed.
2. Apply engine oil on valve stem and carefully slide through cylinder head and valve stem seal.

NOTICE Be careful when passing the valve stem through the sealing lip of the seal.

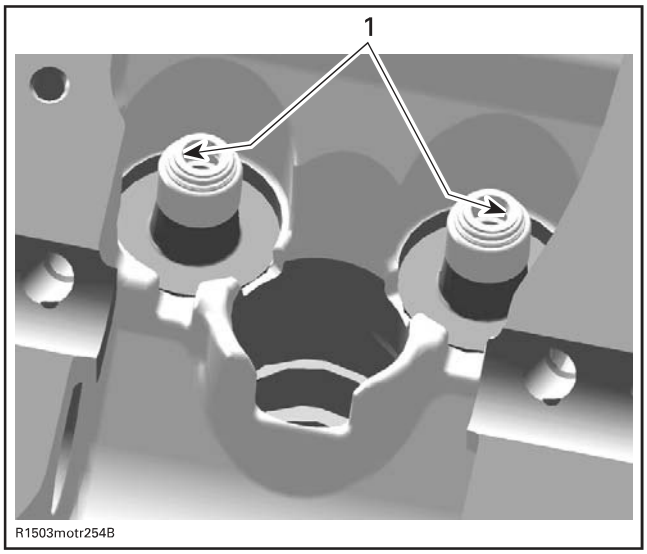

TYPICAL
1. Sealing lips of valve stem seal

3. Install *VALVE SPRING*. See procedure in this subsection.
4. Install all other removed parts.

CYLINDER BLOCK

SERVICE TOOLS

Description	Part Number	Page
CRANKSHAFT LOCKING TOOL	529 036 272	14
OIL SEAL/BEARING PUSHER	529 036 284	5–6
PISTON CIRCLIP INSTALLER	529 036 426	20
PISTON RING COMPRESSOR	529 036 208	22

SERVICE PRODUCTS

Description	Part Number	Page
LOCTITE 243 (BLUE)	293 800 060	7
LOCTITE 5910	293 800 081	12
LOCTITE CHISEL (GASKET REMOVER)	413 708 500	10
SUPER LUBE GREASE	293 550 030	5

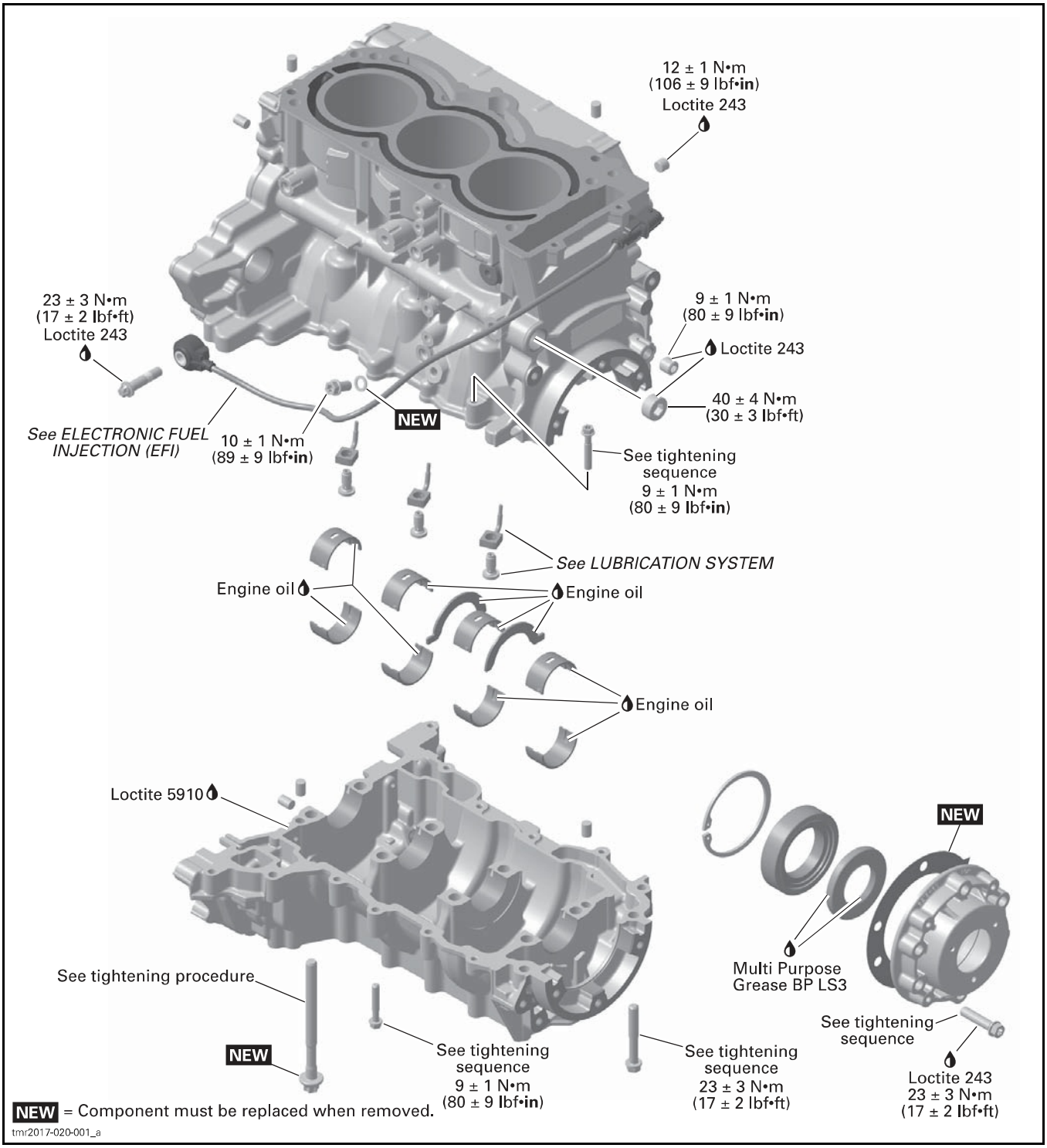
12 ± 1 N•m
(106 ± 9 lbf•in)
Loctite 243
23 ± 3 N•m
(17 ± 2 lbf•ft)
Loctite 243
9 ± 1 N•m
(80 ± 9 lbf•in)
Loctite 243
40 ± 4 N•m
(30 ± 3 lbf•ft)
See ELECTRONIC FUEL INJECTION (EFI)
10 ± 1 N•m
(89 ± 9 lbf•in)
NEW
See tightening sequence
9 ± 1 N•m
(80 ± 9 lbf•in)
See LUBRICATION SYSTEM
Engine oil
Engine oil
Engine oil
Loctite 5910
NEW
Multi Purpose Grease BP LS3
See tightening procedure
NEW
See tightening sequence
9 ± 1 N•m
(80 ± 9 lbf•in)
See tightening sequence
23 ± 3 N•m
(17 ± 2 lbf•ft)
See tightening sequence
Loctite 243
23 ± 3 N•m
(17 ± 2 lbf•ft)
NEW = Component must be replaced when removed.
tmr2017-020-001_a

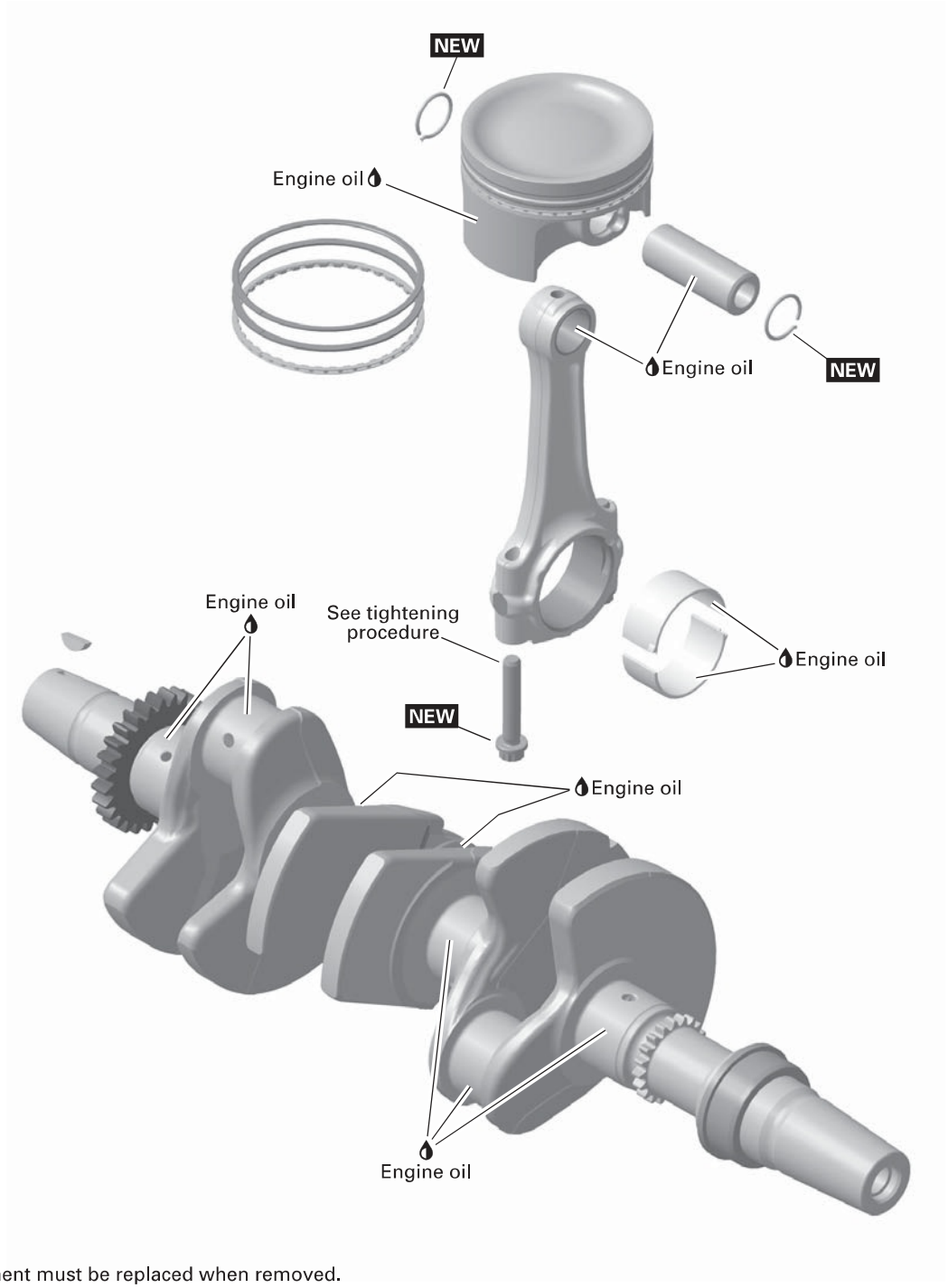

NEW = Component must be replaced when removed.

tmr2017-020-002_a

GENERAL

When disassembling parts that are duplicated in the engine, (e.g.: pistons, connecting rods etc.), it is strongly recommended to note their position and to keep the parts of the same assembly as a "group". If you find a defective component, it would be much easier to find the cause of the failure. Since parts were broken-in during engine operation, they will maintain their matched fit when reassembled together within their "group".

During assembly/installation, use torque values and service products as in the exploded views.

Clean threads before applying a threadlocker. Refer to *SELF-LOCKING FASTENERS* and *LOCTITE APPLICATION* at the beginning of this manual for complete procedure.

⚠ WARNING

Torque wrench tightening specifications must be strictly adhered to.
Locking devices when removed (e.g.: locking tabs, elastic stop nuts, self-locking fasteners, cotter pins, etc.) must be replaced.

NOTICE **Hoses, cables or locking ties removed during a procedure must be reinstalled as per factory standards.**

TROUBLESHOOTING

Always check for fault codes. If a fault code is detected, service the fault code first. Refer to *DIAGNOSTIC AND FAULT CODES* subsection.

UNUSUAL ENGINE NOISE OR VIBRATIONS

1. **Heavy wear on plain bearings.**
   - *Check radial play of plain bearings. Replace if out of specification.*
2. **Crankshaft axial play out of specification.**
   - *Measure crankshaft axial play. If crankshaft axial play is out of specification, replace thrust washers.*
3. **Connecting rod axial play out of specification.**
   - *Measure connecting rod axial play on crankshaft. Replace connecting rod or crankshaft if out of specification.*
4. **Connecting rod screws got loose.**
   - *Replace damaged components and retighten screws with the recommended torque.*
5. **Crankshaft PTO ball bearing is worn.**
   - *Remove PTO cover and check ball bearing for excessive play. Replace ball bearing if necessary.*

BLUE SMOKE IN THE EXHAUST

1. **Oil scraper rings worn out.**
   - *Replace piston rings.*

ENGINE SUDDENLY TURNS OFF (POOR IDLING)

1. **Piston rings worn out.**
   - *Replace piston rings.*
2. **Piston/cylinder clearance out of specification.**
   - *Check piston/cylinder clearance. Replace if out of specification.*
3. **Melted or broken piston.**
   - *Replace piston and cylinder block if necessary.*

PROCEDURES

PTO COVER AND PTO OIL SEALS

PTO Cover Access

To replace the PTO oil seal, it is not necessary to remove engine from the vehicle.

Remove drive pulley. Refer to *CONTINUOUSLY VARIABLE TRANSMISSION (CVT* subsection.

Removing the PTO Cover

Remove screws retaining the PTO cover.

Remove PTO cover and discard gasket.

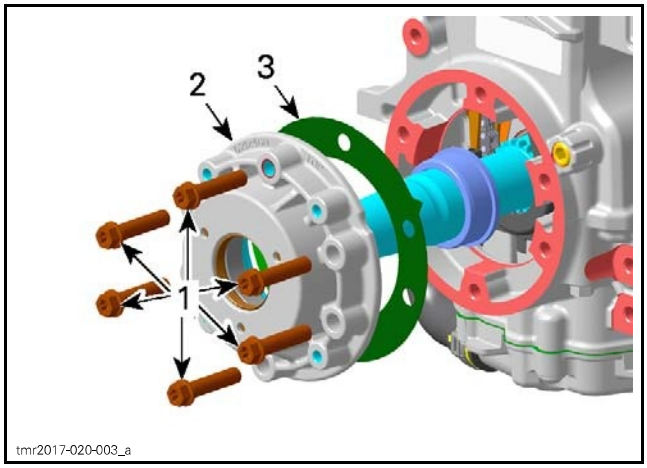

1. *PTO cover screws*
2. *PTO cover*
3. *Gasket*

PTO Oil Seal and Bearing Replacement

NOTE: Always replace PTO oil seal and roller bearing at the same time.

Removing the PTO Oil Seal and Bearing

1. Use pliers to remove inner retaining ring.

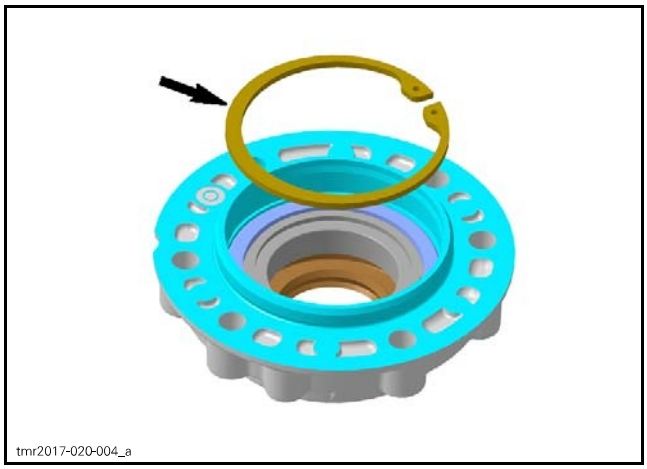

2. Heat PTO cover up to 130°C (266°F) before removing the roller bearing and oil seal.

NOTICE Clean PTO cover from oil before heating.

3. Carefully push out oil seal and roller bearing.

REQUIRED TOOL
Punch 4 mm (.157 in)

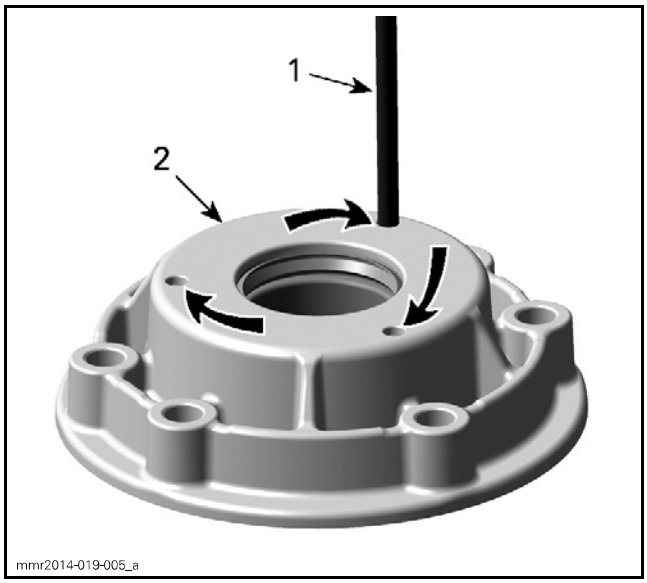

PUSH OUT CIRCULAR
1. *Punch*
2. *PTO cover*

4. Remove and discard roller bearing and oil seal.

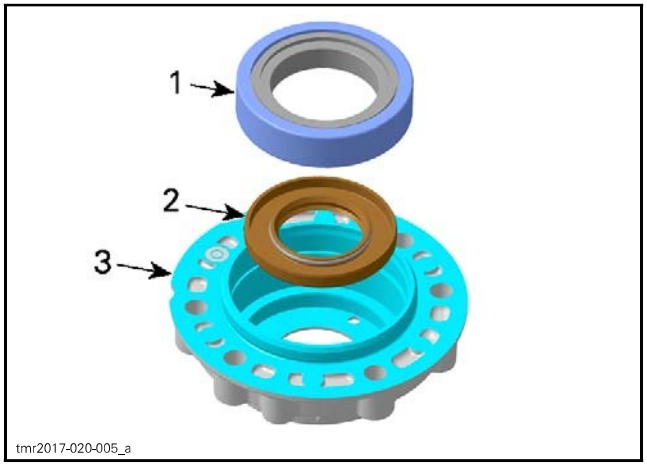

1. *Roller bearing*
2. *Oil seal*
3. *PTO cover*

Installing the PTO Oil Seal and Bearing

NOTE: Check the oil seal running surface of crankshaft for grooves and deposits, before installation of NEW oil seal.

1. Clean crankshaft PTO side from deposits.
2. Clean oil seal and roller bearing areas in PTO cover.
3. Lubricate oil seal outer diameter and sealing lip.

OIL SEAL SEALING LIP AND OUTER DIAMETER	
Service product	SUPER LUBE GREASE (P/N 293 550 030)

4. Press NEW oil seal in PTO cover.

NOTICE Oil seal must be installed with sealing lip facing to the engine.

REQUIRED TOOL	
OIL SEAL/BEARING PUSHER (P/N 529 036 284)	

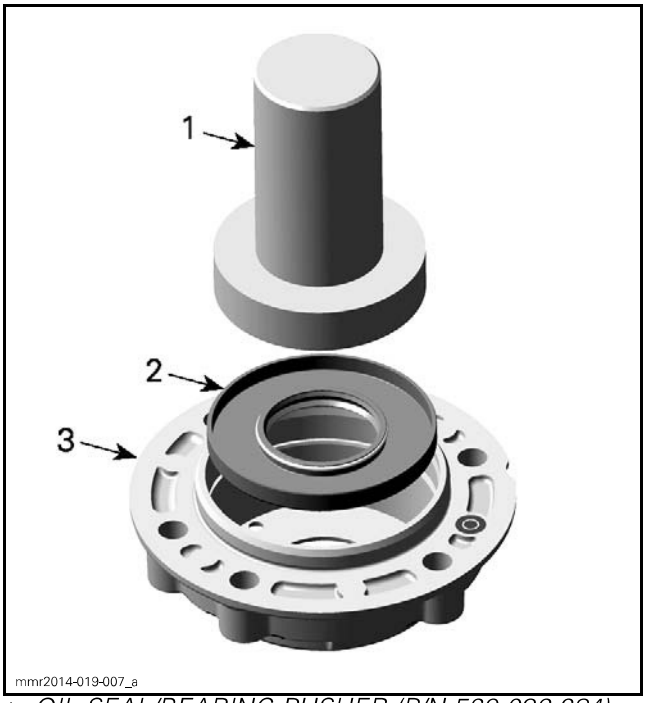

1. *OIL SEAL/BEARING PUSHER (P/N 529 036 284)*
2. *Oil seal*
3. *PTO cover*

5. Place **NEW** roller bearing in PTO cover.
6. Carefully press in the roller bearing.

NOTICE **During installation never push on the inner race of the bearing.**

REQUIRED TOOL	
OIL SEAL/BEARING PUSHER (P/N 529 036 284)	

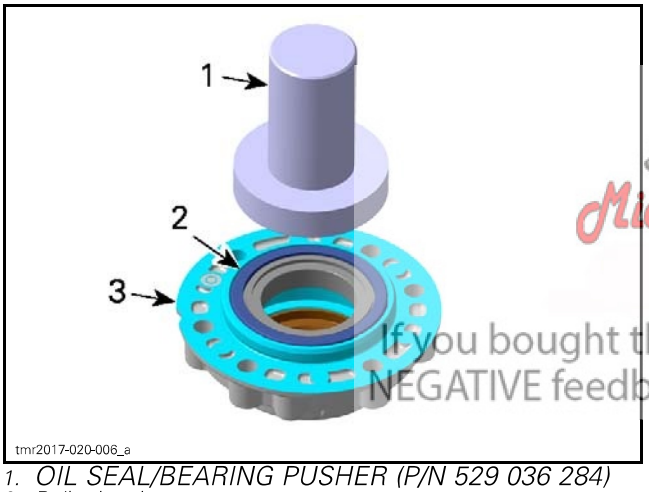

1. *OIL SEAL/BEARING PUSHER (P/N 529 036 284)*
2. *Roller bearing*
3. *PTO cover*

7. Install retaining ring.

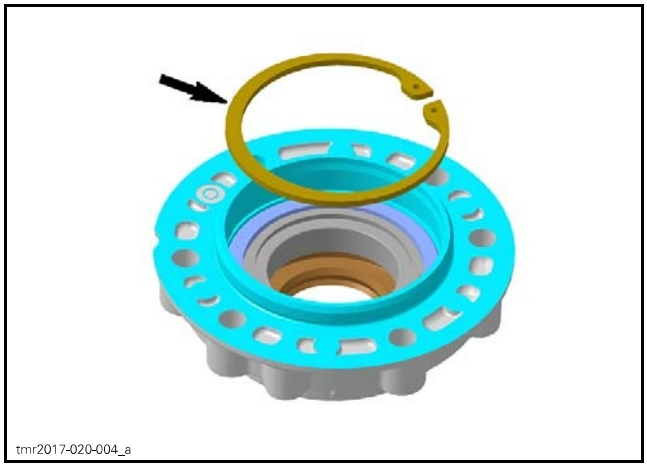

Installing the PTO Cover

For installation, reverse the removal procedure. Pay attention to following details.

Install a **NEW** PTO cover gasket in proper position.

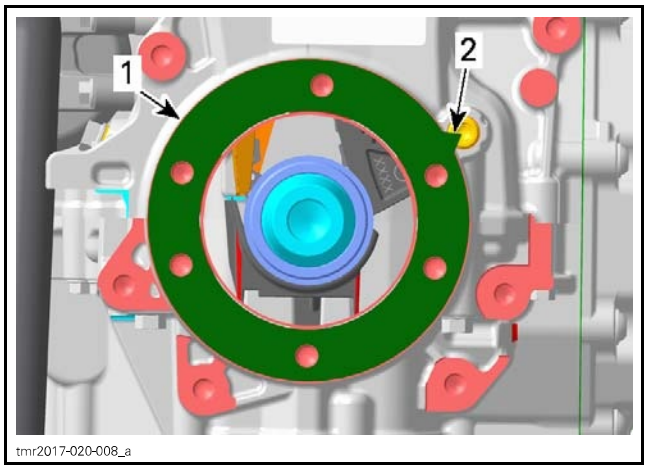

1. *Gasket*
2. *Tab*

Tighten PTO cover screws as per following sequence.

Midwest Manuals
Green Manuals
Paperless Manuals
For a Better Tomorrow
If you bought this manual from any other seller please leave them NEGATIVE feedback and notify me at bestshopmanuals@gmail.com

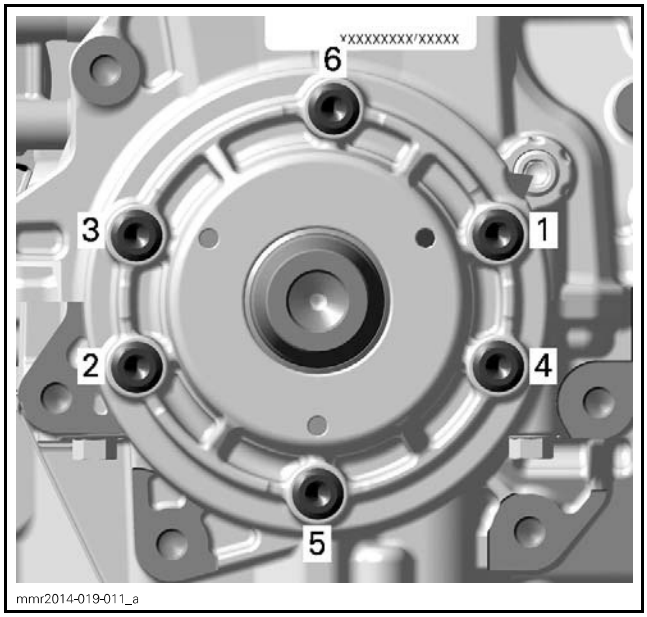

PTO COVER TIGHTENING SEQUENCE

TIGHTENING TORQUE	
Service product	LOCTITE 243 (BLUE) (P/N 293 800 060)
PTO cover screws	23 N•m ± 3 N•m (17 lbf•ft ± 2 lbf•ft)

CYLINDER BLOCK

Disassembling the Cylinder Block

1. Remove engine from the vehicle. Refer to *ENGINE REMOVAL AND INSTALLATION* subsection.
2. Drain engine oil.
3. Refer to *CONTINUOUSLY VARIABLE TRANSMISSION (CVT)* subsection to remove following parts:
   – Drive pulley
   – Driven pulley
   – CVT air guide.
4. Detach gearbox from engine. Refer to *GEARBOX AND 4X4 COUPLING UNIT* subsection.
5. Remove the valve cover. Refer to *CYLINDER HEAD* subsection.
6. Lock crankshaft, refer to *CRANKSHAFT LOCKING PROCEDURE* in this subsection.
7. Remove air intake manifold. Refer to *AIR INTAKE SYSTEM* subsection.
8. Refer to *COOLING SYSTEM* subsection and remove:
   – Water pump housing
   – Thermostat
   – Water pump drive gear.
9. Refer to *LUBRICATION SYSTEM* subsection and remove:
   – Oil tank
   – Oil cooler
   – Oil pressure regulator
   – Oil pump drive gears and oil pumps
   – Oil sump cover
   – Oil strainers.
10. Refer to *MAGNETO AND STARTER* subsection and remove:
    – Rotor
    – Starter drive gears
    – Electric starter.
11. Refer to *TIMING CHAIN* subsection and remove:
    – Timing chain tensioner
    – Timing chain guides.
12. Refer to *CYLINDER HEAD* subsection and remove:
    – Camshaft holders
    – Cylinder head.
13. Remove PTO cover. Refer to *PTO COVER AND PTO OIL SEAL* in this subsection.

NOTE: Before splitting the cylinder block, measure crankshaft axial play. Refer to *CRANKSHAFT* in this subsection.

14. Remove crankshaft locking tool.
15. Remove cylinder block screws.
    15.1 Start removing the M6 screws.
    15.2 Then remove the M8 screws.
    15.3 Finally remove and discard the M9 screws.

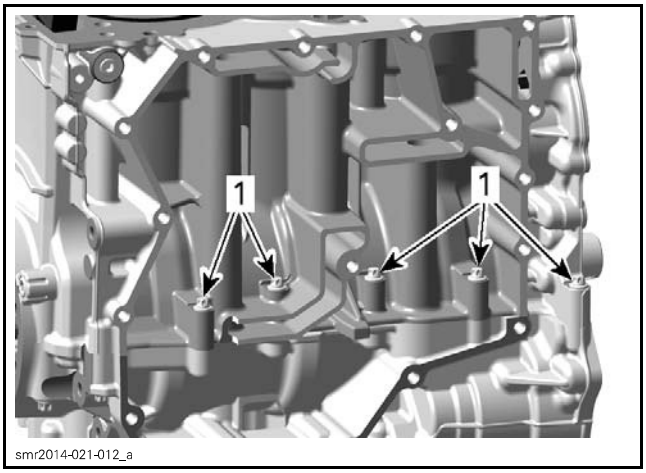

INTAKE SIDE
1. *Cylinder block screws (M6) screwed from top to bottom*

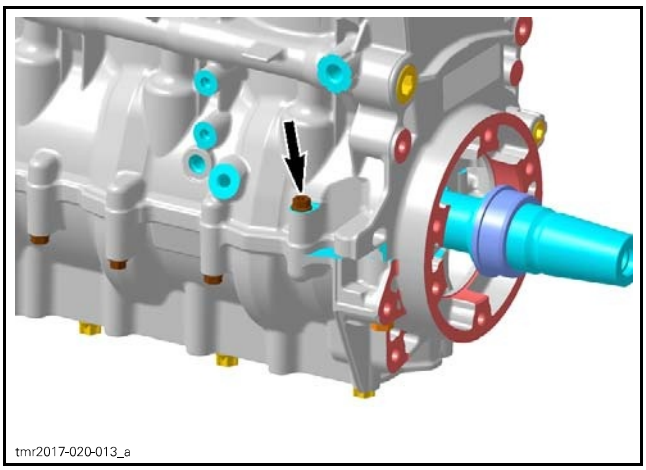

CYLINDER BLOCK SCREW (M6) SCREWED FROM TOP TO BOTTOM - EXHAUST SIDE

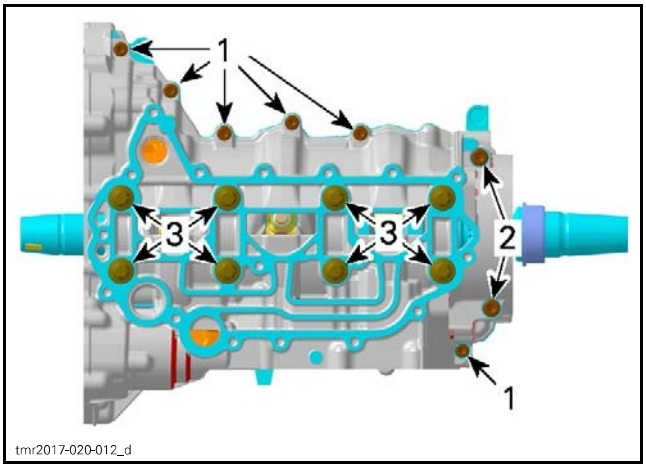

BOTTOM SIDE
1. *M6 screws*
2. *M8 screws*
3. *M9 screws (discard)*

16. Carefully remove cylinder block lower half by using a soft hammer.

NOTE: Take care not to damage the sealing surfaces of the cylinder block halves.

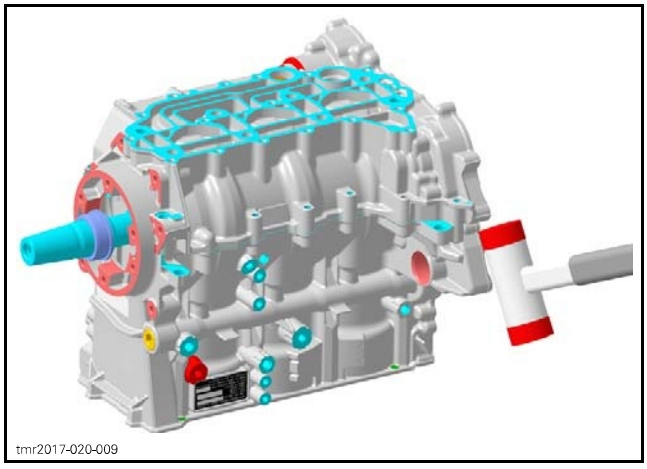

17. Remove connecting rod caps. Refer to *PISTONS AND CONNECTING RODS* in this subsection.
18. Refer to *CRANKSHAFT* in this subsection and remove:
    – Crankshaft thrust washers
    – Crankshaft.
19. Remove pistons and connecting rods. See procedure in this subsection.

Removing the Plain Bearing

When the plain bearings need to be removed from the cylinder block, mark them to identify the correct position at installation. See the illustration as an example.

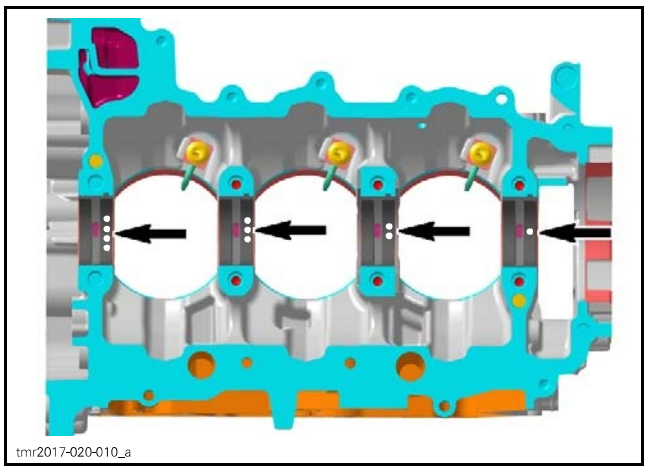

MARKS ON CRANKSHAFT PLAIN BEARINGS

Cleaning the Cylinder Block

Clean cylinder block using a part cleaner, then use compressed air to dry it.

Blow out the oil orifices using compressed air and make sure they are not clogged.

Inspect oil nozzles, refer to *LUBRICATION SYSTEM* subsection.

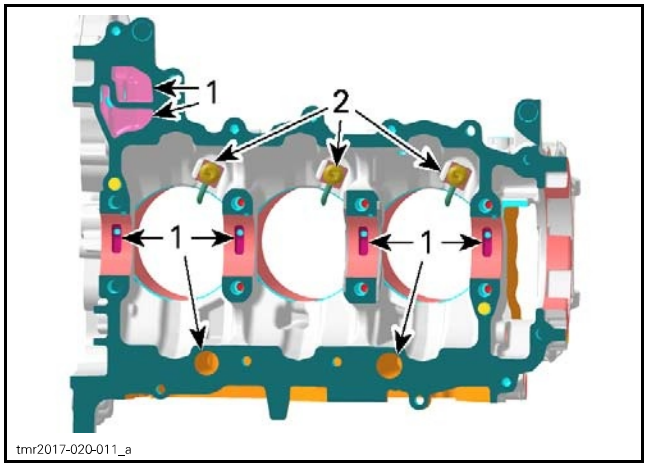

CYLINDER BLOCK UPPER HALF
1. *Oil orifices*
2. *Oil nozzles*

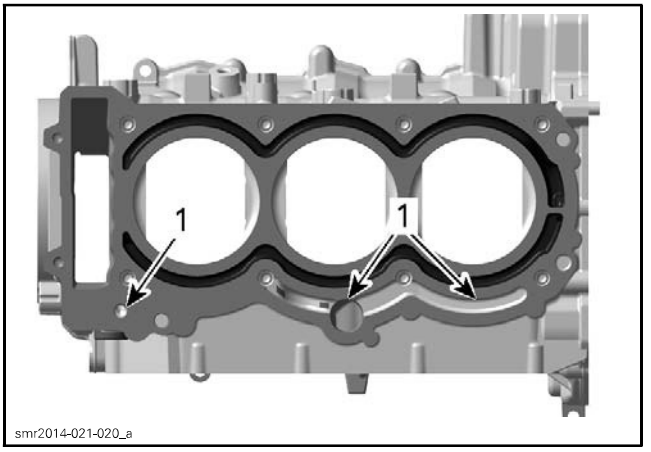

CYLINDER BLOCK - TOP
1. *Oil orifices*

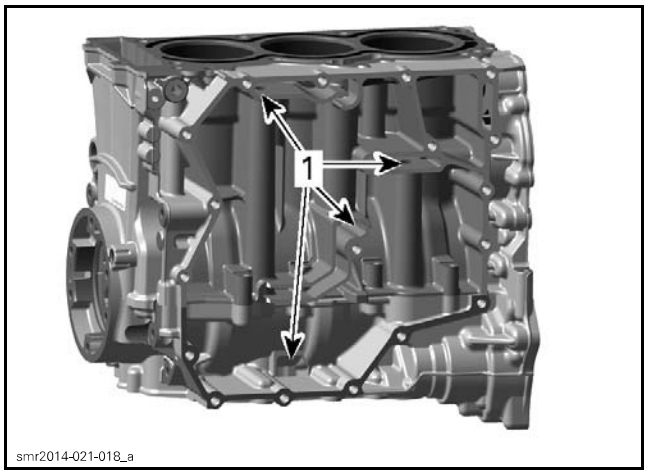

CYLINDER BLOCK - REAR
1. *Oil orifices*

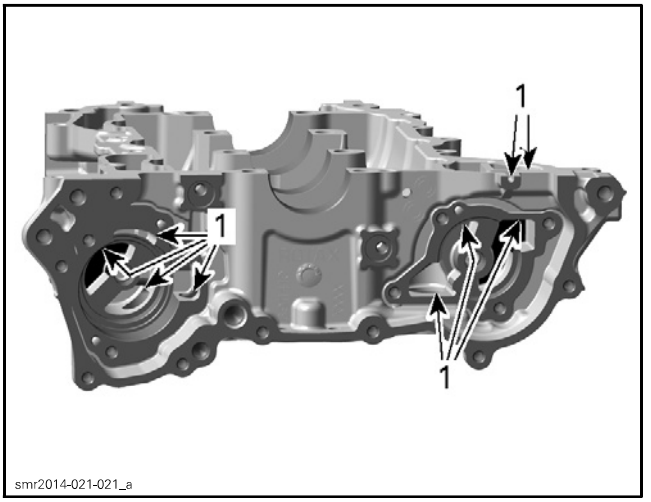

CYLINDER BLOCK LOWER HALF
1. *Oil orifices*

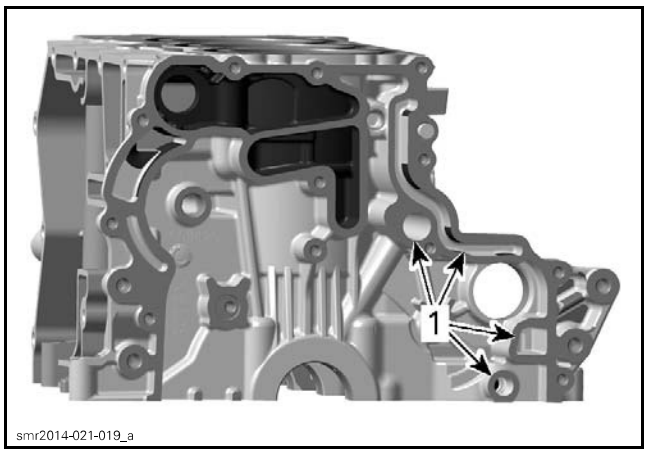

CYLINDER BLOCK - MAG SIDE
1. *Oil orifices*

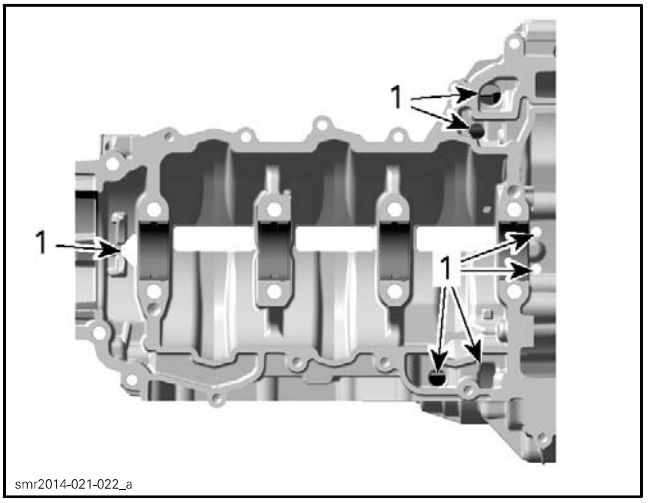

CYLINDER BLOCK LOWER HALF
1. *Oil orifices*

Clean all metal components in a solvent.

Clean cylinder block mating surfaces with LOCTITE CHISEL (GASKET REMOVER) (P/N 413 708 500) and a brass brush. Brush a first pass in one direction then make the final brushing perpendicularly (90°) to the first pass (cross hatch).

NOTE: Do not wipe with rags. Use a new clean hand towel only.

Inspecting the Cylinder Block

Check cylinder block for cracks or other damage.

Check cylinder block mating surfaces for flatness using a straight edge.

Replace cylinder block if necessary.

Check cylinder bores for cracks, scoring and wear ridges on top and bottom of the cylinders.

Cylinder Taper

Measure cylinder bore diameter at 4 recommended positions. See illustration.

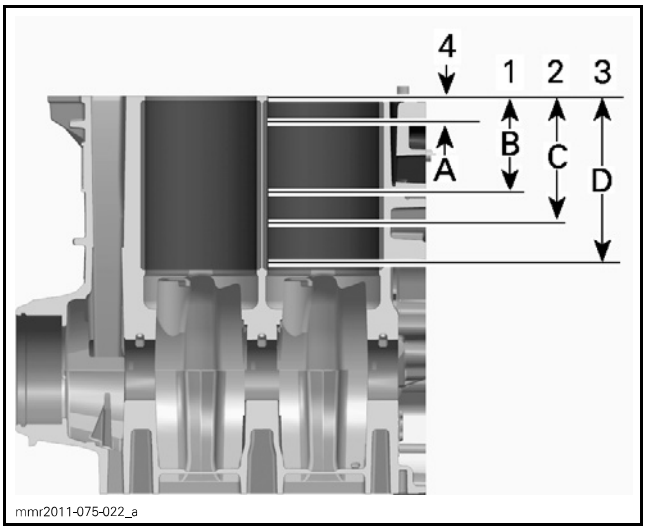

TYPICAL
1. *First measure*
2. *Second measure*
3. *Third measure*
4. *Fourth measure*

A. 5 mm to 10 mm (.197 in to .394 in)
B. 30 mm to 35 mm (1.181 in to 1.378 in)
C. 57 mm to 62 mm (2.244 in to 2.441 in)
D. 111 mm to 113 mm (4.37 in to 4.449 in)

The difference between measurements should not exceed the service limit mentioned in next table.

CYLINDER TAPER	
NEW MAXIMUM	0.030 mm (.0012 in)
SERVICE LIMIT	0.050 mm (.002 in)

Cylinder Out of Round

Measure cylinder bore diameter as shown and at the same measuring points as for *CYLINDER TAPER*.

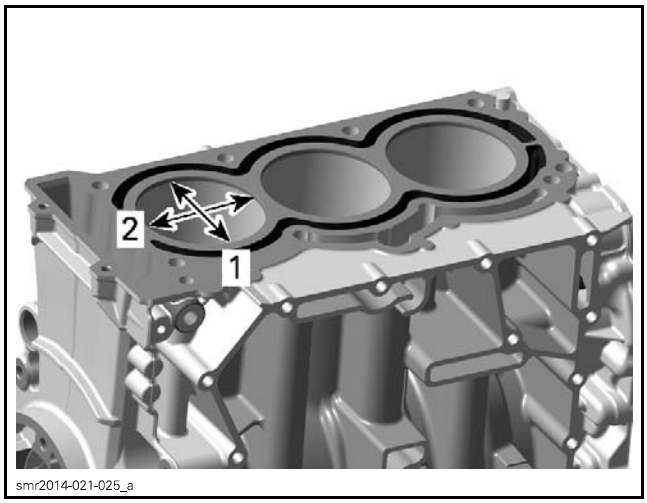

1. *Perpendicular to piston pin axis*
2. *Parallel to piston pin axis*

To obtain the cylinder out of round, calculate the difference between the perpendicular measures.

CYLINDER OUT OF ROUND	
NEW MAXIMUM	0.008 mm (.0003 in)
SERVICE LIMIT	0.030 mm (.0012 in)

Inspecting Plain Bearings Diameter

Check the plain bearings for scoring or other damages.

Measure plain bearing inside diameter and compare with crankshaft bearing journal diameter (refer to *CRANKSHAFT* in this subsection). Proceed as follows.

– Use the OLD plain bearings and put both cylinder block halves together.
– Tighten screws as described in *ASSEMBLING THE CYLINDER BLOCK*.
– Measure the inside diameter of the crankshaft plain bearings using a bore gauge.

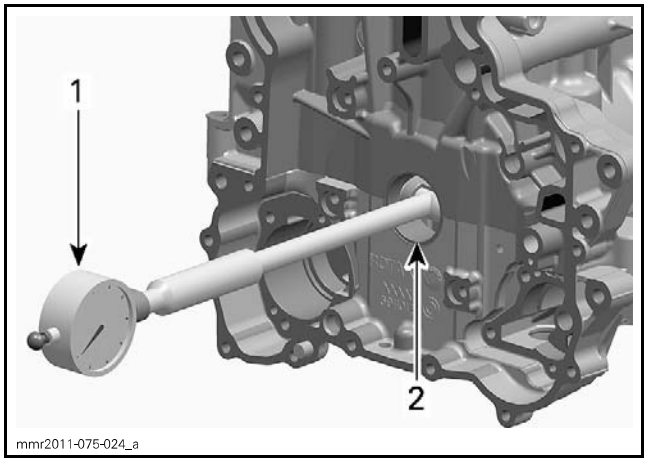

1. *Bore gauge*
2. *Crankshaft plain bearing*

CRANKSHAFT PLAIN BEARING INSIDE DIAMETER	
SERVICE LIMIT	36.080 mm (1.4205 in)

Replace bearings if they are out of specifications.

Assembling the Cylinder Block

For assembly, reverse the disassembly procedure. Pay attention to the following details.

1. Correctly reinstall plain bearings as follows.

1.1 Use NEW bearings if diameters are out of specification. Refer to *INSPECTING PLAIN BEARING DIAMETER* in this subsection.

1.2 Install bearings with lubrication grooves in the cylinder block upper half.

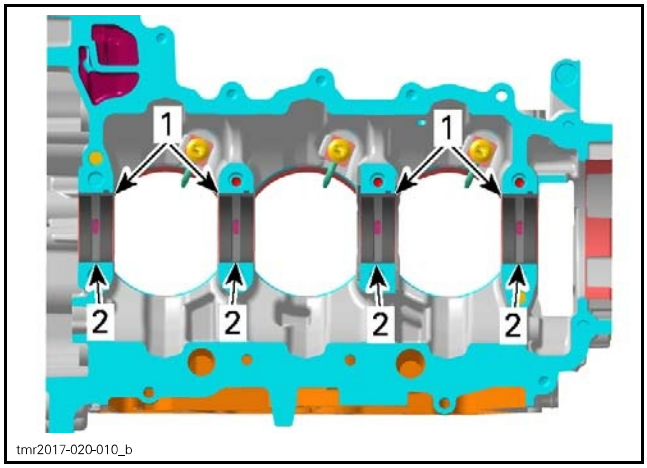

1. *Plain bearings*
2. *Lubrication grooves*

1.3 Install flat bearings in the cylinder block lower half.

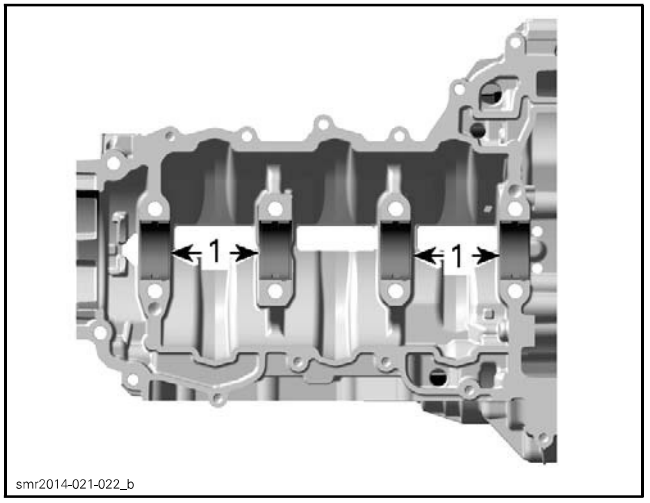

1. *Flat bearings*

1.4 Bearings must be flush with the cylinder block split surface and their protrusions have to fit in the notched areas in the cylinder block seat.

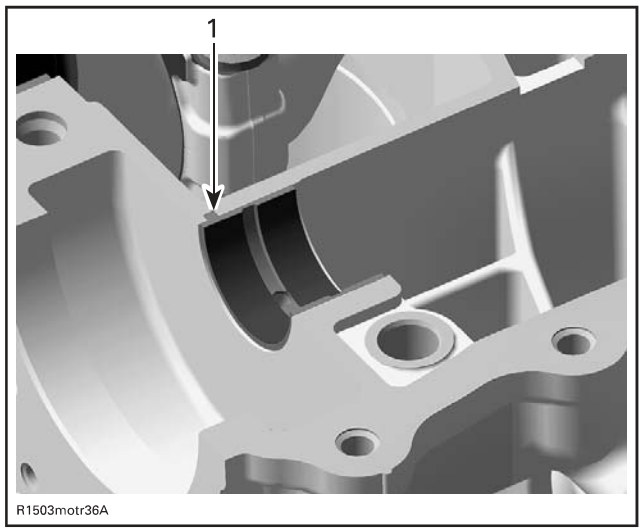

TYPICAL
1. *Bearing protrusion in cylinder block notch*

2. Install pistons, refer to *PISTONS AND CONNECTING RODS* in this subsection.
3. Apply engine oil on all plain bearings.
4. Install the following components:
   - Crankshaft and thrust washers (refer to *CRANKSHAFT*)
   - Connecting rod caps (refer to *PISTONS AND CONNECTING RODS*).
5. Apply sealant on mating surface of cylinder block lower half as shown on next illustration.

CYLINDER BLOCK SEALANT	
Service product	LOCTITE 5910 (P/N 293 800 081)

IMPORTANT: When beginning the application of the cylinder block sealant, the assembly and first tightening have to be done within 12 minutes. It is suggested to have all you need on hand to save time.

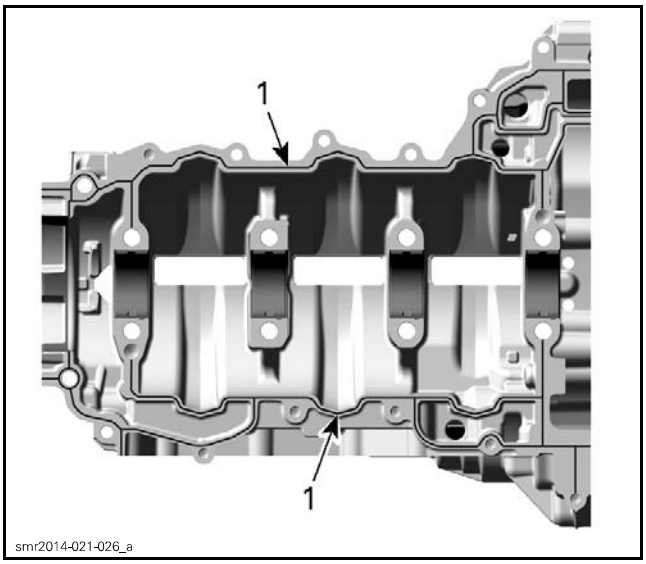

1. Apply Loctite 5910 following this pattern

NOTICE Ensure not to apply too much sealant, as it will spread out inside the cylinder block.

NOTICE Take care that the bypass passage of the engine oil pressure regulator is not clogged with sealant.

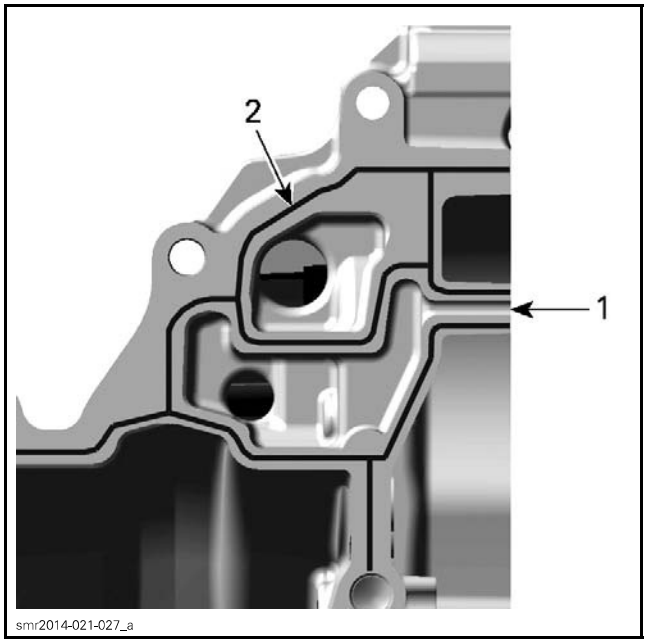

1. Bypass passage of engine oil pressure regulator
2. Loctite 5910 applied

6. Install **NEW** cylinder block M9 screws and tighten as follows.

NOTICE This assembly uses stretch screws. Always use NEW screws and strictly adhere to the tightening procedure.

6.1 Torque the M9 screws according the sequence.

TIGHTENING PROCEDURE		
Cylinder block M9 screws	STEP A	20 N•m ± 2 N•m (15 lbf•ft ± 1 lbf•ft)

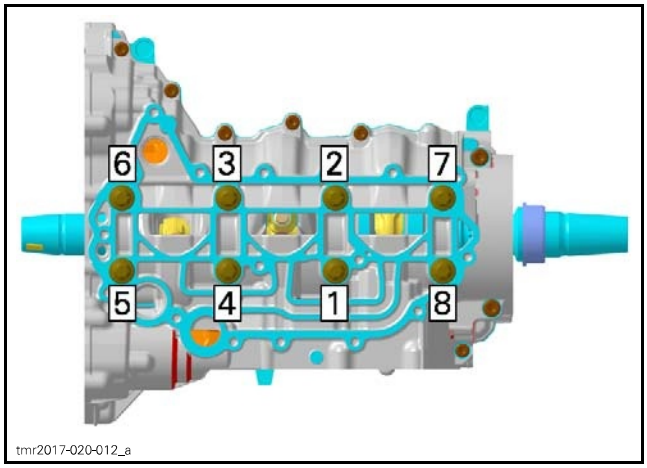

M9 SCREWS TIGHTENING SEQUENCE - FIRST AND SECOND STEPS

6.2 Use a torque angle gauge to carry out the second step, following the same sequence.

TIGHTENING PROCEDURE		
Cylinder block M9 screws	STEP B	Additional 150° ± 5°

7. Install the M8 screws and tighten as follows.

TIGHTENING TORQUE	
Cylinder block M8 screws	23 N•m ± 2 N•m (17 lbf•ft ± 1 lbf•ft)

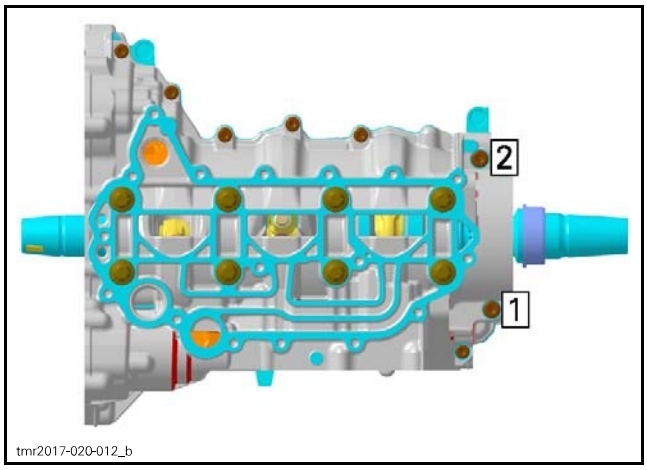

M8 SCREWS TIGHTENING SEQUENCE

8. Install the M6 screws and tighten as follows.

TIGHTENING TORQUE	
Cylinder block M6 screws	9 N•m ± 1 N•m (80 lbf•**in** ± 9 lbf•**in**)

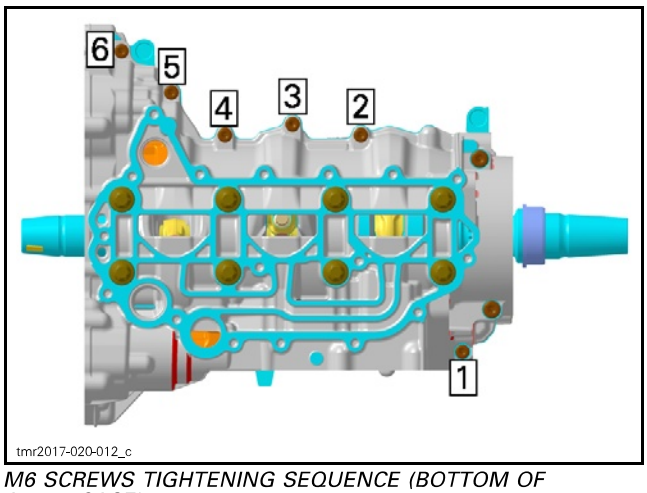

M6 SCREWS TIGHTENING SEQUENCE (BOTTOM OF CRANKCASE)

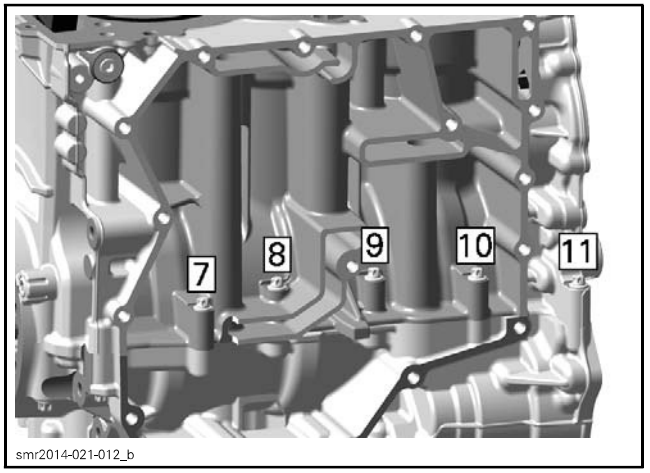

M6 SCREWS TIGHTENING SEQUENCE (INTAKE SIDE OF CRANKCASE)

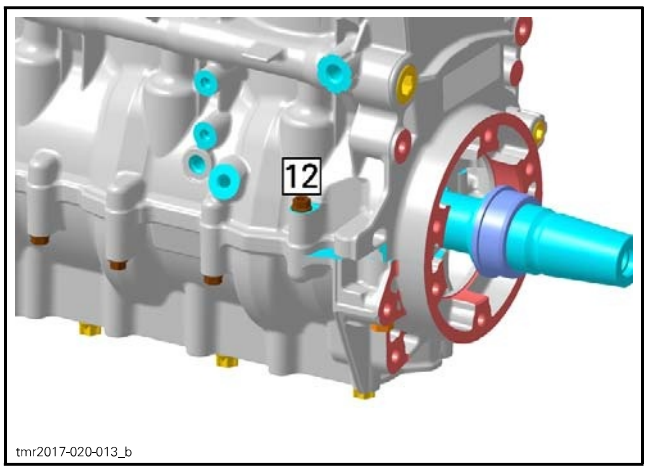

M6 SCREW TIGHTENING SEQUENCE (EXHAUST SIDE OF CRANKCASE)

NOTE: Check the crankshaft axial play before continuing the assembly. Refer to *CRANKSHAFT* in this subsection for the procedure.

9. Lubricate PTO oil seals properly before reinstalling the PTO cover. Refer to *PTO COVER AND PTO OIL SEALS* in this subsection.
10. Reassemble engine in accordance with the proper assembly procedures.

CRANKSHAFT

Crankshaft Locking Procedure

NOTICE **When crankshaft is locked, the second cylinder is set to TDC.**

Crankshaft must be locked whenever the magneto rotor retaining nut has to be removed or whenever working on the valve train.

NOTICE When working on the valve train or timing chain, crankshaft must be locked with the marks "IN" and "EX" on the camshaft timing gears facing each other.

1. If working on the valve train or timing chain, remove the valve cover. Refer to *CYLINDER HEAD* subsection.
2. Remove spark plugs.
3. Remove crankshaft access plug and discard gasket ring.

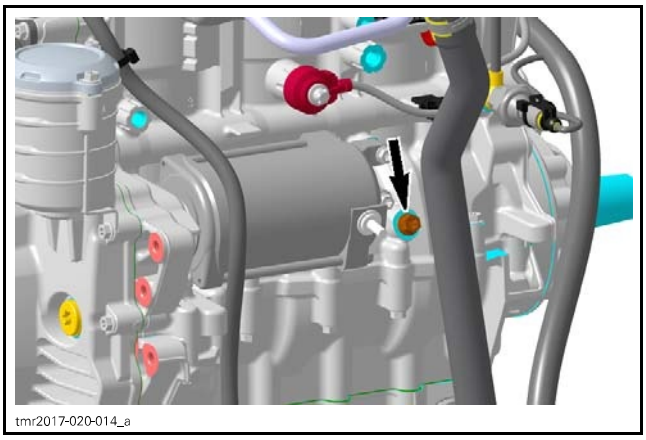
tmr2017-020-014_a

4. Turn engine on PTO side counterclockwise to bring crankshaft to locking position.

For turning the crankshaft install drive pulley or use a suitable screw locked by a counter nut.

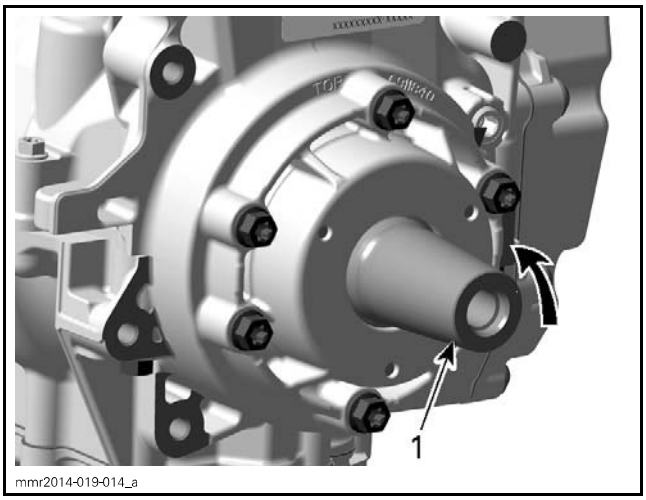

mmr2014-019-014_a

1. Crankshaft PTO side

NOTICE Crankshaft locking position is reached when marks "IN" and "EX" on the camshaft timing gears face each other.

5. Use a flashlight to check if the groove in the crankshaft is aligned with the hole.
6. Lock crankshaft.

REQUIRED TOOL	
CRANKSHAFT LOCKING TOOL (P/N 529 036 272)	

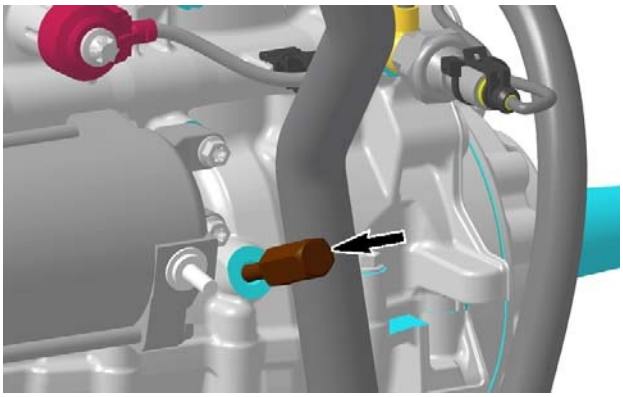
tmr2017-020-015_a

Removing the Crankshaft

1. Disassemble *CYLINDER BLOCK*, see procedure in this subsection.
2. Remove connecting rod caps. Refer to *PISTONS AND CONNECTING RODS* in this subsection.
3. Remove crankshaft thrust washers.

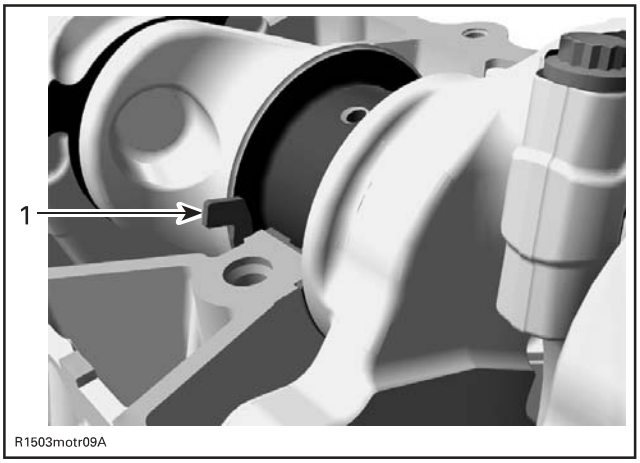

R1503motr09A

TYPICAL
1. Thrust washer

4. Remove crankshaft from cylinder block.

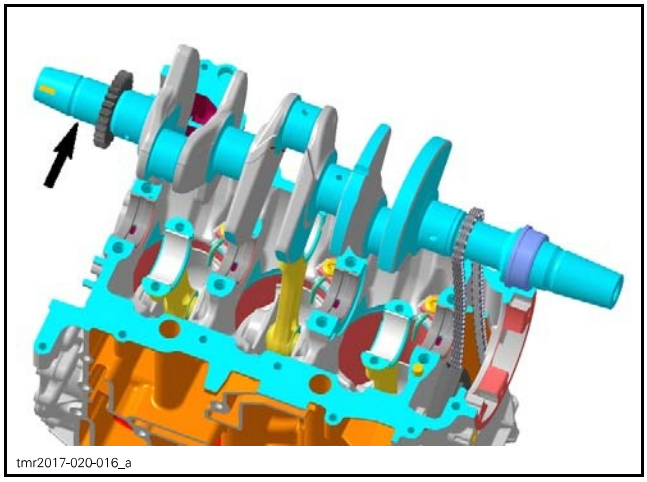
tmr2017-020-016_a

Inspecting the Crankshaft

Check each bearing journal of crankshaft for scoring, scuffing, cracks or other signs of wear.

Check if crankshaft gears are worn or otherwise damaged.

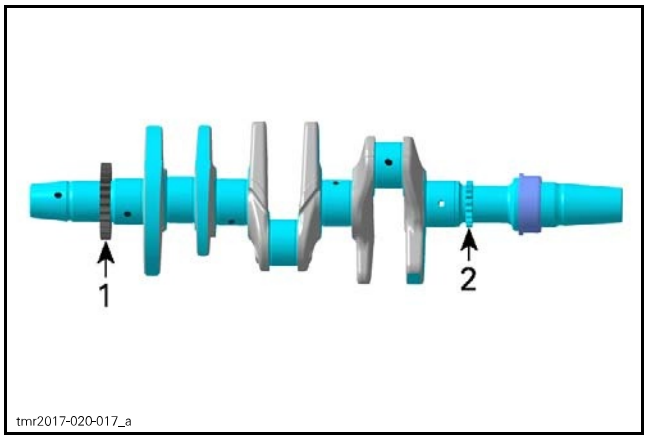

tmr2017-020-017_a

1. Oil pump drive gear
2. Crankshaft timing gear

Replace crankshaft if damaged.

Blow the oil orifices using compressed air and make sure they are not clogged.

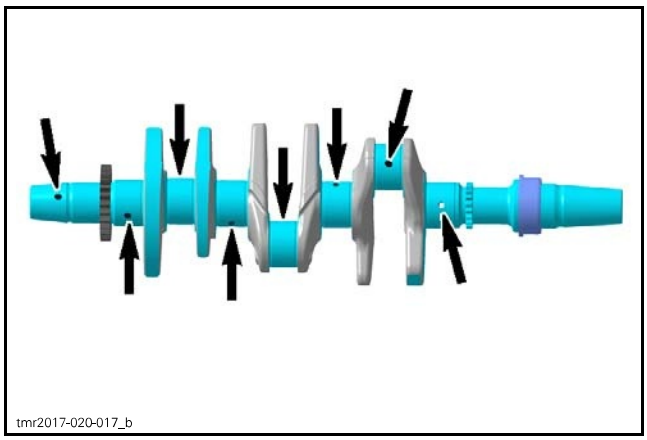
tmr2017-020-017_b

Crankshaft Radial Play

Measure crankshaft bearing journal diameter, using a micrometer.

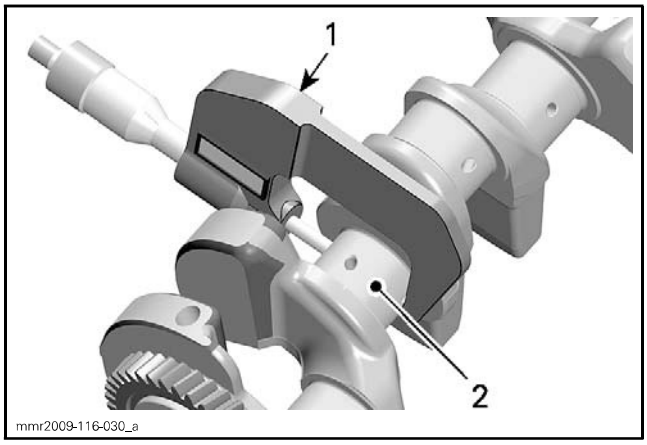

mmr2009-116-030_a

TYPICAL
1. Micrometer
2. Crankshaft area for plain bearing

To obtain the radial play, calculate the difference between the bearing journal diameter and the crankshaft plain bearings inner diameter (see *CYLINDER BLOCK*).

CRANKSHAFT BEARING JOURNAL DIAMETER	
NEW	35.990 mm to 36.006 mm (1.4169 in to 1.4176 in)
SERVICE LIMIT	35.960 mm (1.4157 in)

CRANKSHAFT RADIAL PLAY	
SERVICE LIMIT	0.08 mm (.0031 in)

Crankshaft Pin Diameter

Measure crankshaft pin diameter, using a micrometer.

To obtain the radial play, calculate the difference between the crankshaft pin diameter and the connecting rod plain bearings inner diameter (see *INSPECTING THE CONNECTING ROD*).

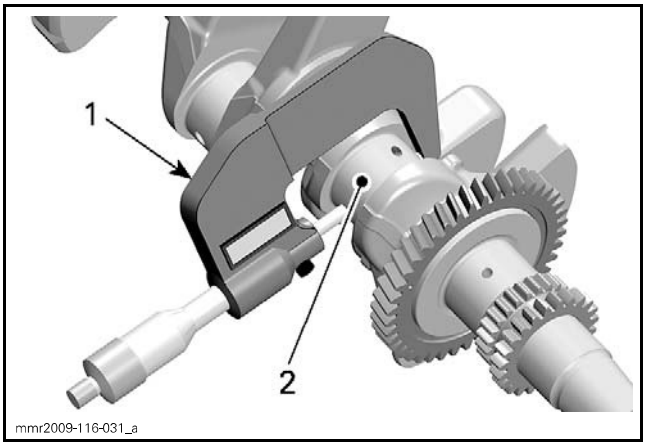

TYPICAL
1. *Micrometer*
2. *Crankshaft pin area for plain bearing*

CRANKSHAFT PIN DIAMETER	
NEW	35.979 mm to 35.995 mm (1.4165 in to 1.4171 in)
SERVICE LIMIT	35.969 mm (1.4161 in)

CONNECTING ROD BIG END RADIAL PLAY	
SERVICE LIMIT	0.08 mm (.0031 in)

Crankshaft Axial Play

With the crankshaft in the cylinder block, measure the crankshaft axial play, using a dial indicator.

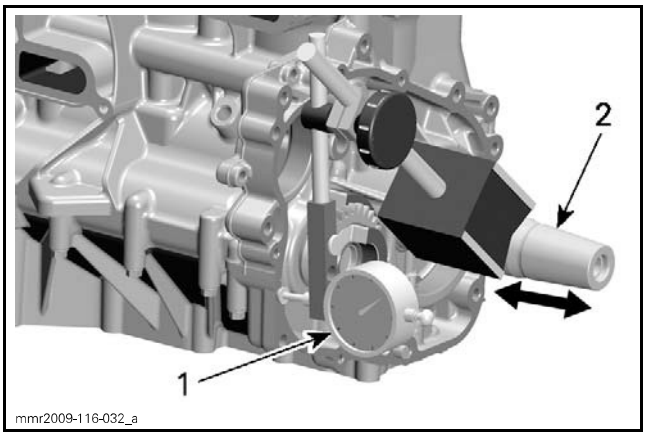

TYPICAL
1. *Dial indicator*
2. *Crankshaft*

CRANKSHAFT AXIAL PLAY	
NEW	0.120 mm to 0.352 mm (.005 in to .014 in)
SERVICE LIMIT	0.450 mm (.018 in)

If play is out of specification, replace the crankshaft thrust washers and repeat measurement.

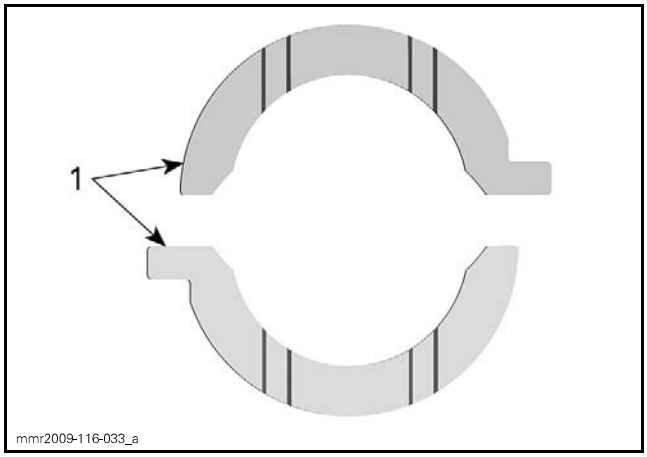

TYPICAL
1. *Crankshaft thrust washers*

Installing the Crankshaft

For installation, reverse the removal procedure. Pay attention to following details.

Turn cylinder block upside down.

NOTICE **Be careful that connecting rods do not hit the cylinder block.**

Apply engine oil on all plain bearings before installing them.

Install crankshaft along with the timing chain.

Lubricate (both sides) and reinstall crankshaft thrust washers with the slots facing against crankshaft counterweights.

NOTE: Thrust washers have to be flush with the cylinder block sealing surface.

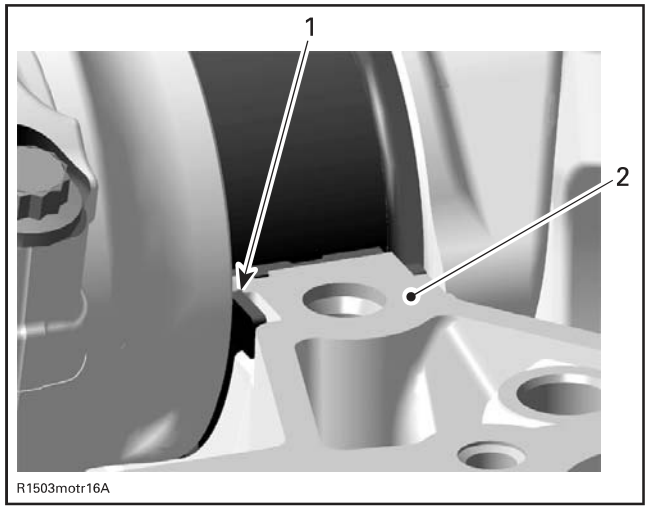

TYPICAL
1. *Thrust washer*
2. *Sealing surface*

Install connecting rod caps. Refer to *PISTONS AND CONNECTING RODS* in this subsection.

NOTICE It is absolutely necessary to follow this procedure. Otherwise severe engine damage can occur.

Install cylinder block lower half. Refer to *CYLINDER BLOCK* in this subsection.

Lock crankshaft before further assembly of the engine. See *CRANKSHAFT LOCKING PROCEDURE* in this subsection.

PISTONS AND CONNECTING RODS

Removing the Piston and Connecting Rod

NOTE: It is recommended to measure connecting rod big end axial play prior to remove connecting rod. Refer to *CONNECTING ROD INSPECTION*.

1. Disassemble *CYLINDER BLOCK* as per procedure in this subsection.
2. Remove connecting rod cap.

NOTICE Mark cylinder position of connecting rod before disassembly.

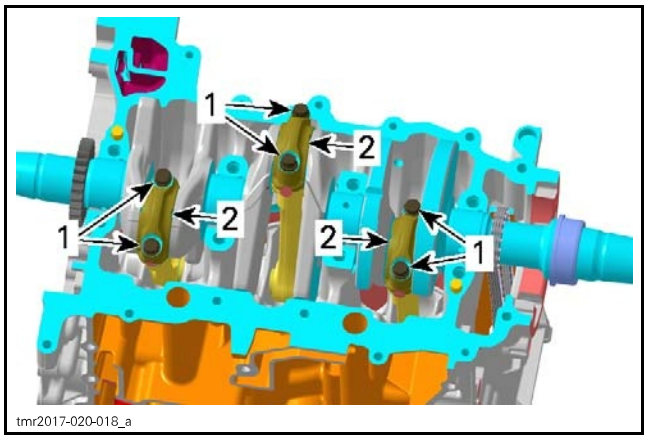

1. Connecting rod screws
2. Connecting rod cap

3. Remove *CRANKSHAFT* as per procedure in this subsection.
4. Turn cylinder block and push piston with connecting rod out of the cylinder.

Disassembling the Piston and Connecting Rod

1. Remove one piston pin circlip and discard it.

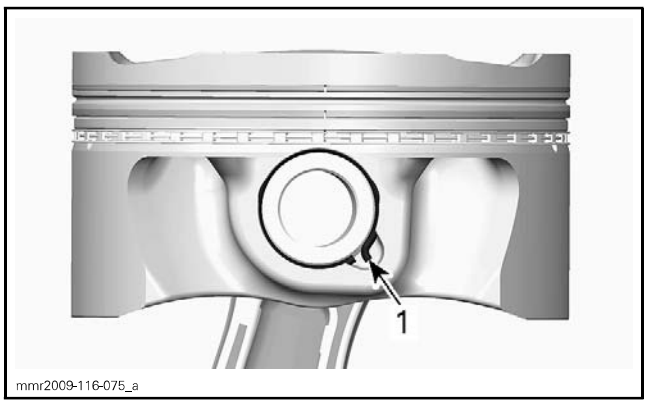

TYPICAL
1. Piston pin circlip

NOTE: The removal of both piston pin circlips is not necessary to remove the piston pin.

2. Push piston pin out of the piston.

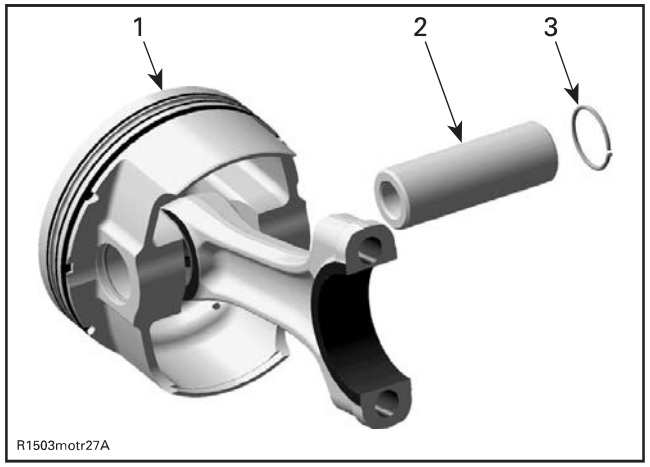

TYPICAL
1. Piston
2. Piston pin
3. Circlip

3. Detach piston from connecting rod.

Inspecting the Connecting Rod

Connecting Rod Big End Axial Play

Using a feeler gauge, measure distance between butting face of connecting rod and crankshaft counterweight. If the distance exceeds specified tolerance, replace the worn part.

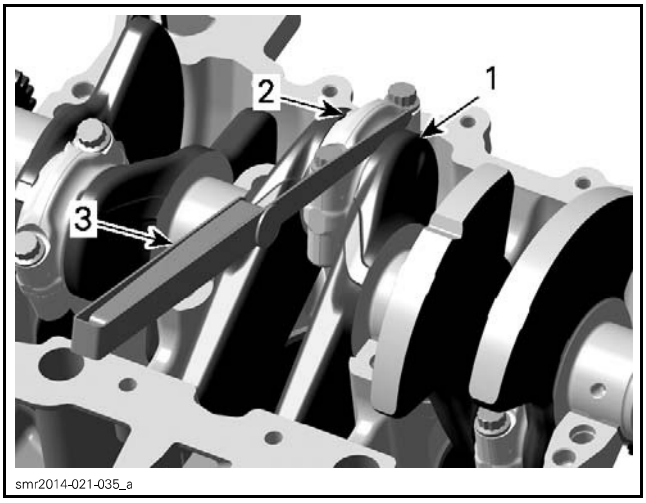

1. Crankshaft
2. Connecting rod
3. Feeler gauge

CONNECTING ROD BIG END AXIAL PLAY	
NEW	0.100 mm to 0.352 mm (.004 in to .014 in)
SERVICE LIMIT	0.450 mm (.018 in)

Connecting Rod Small End Radial Play

Measure connecting rod small end, using a bore gauge.

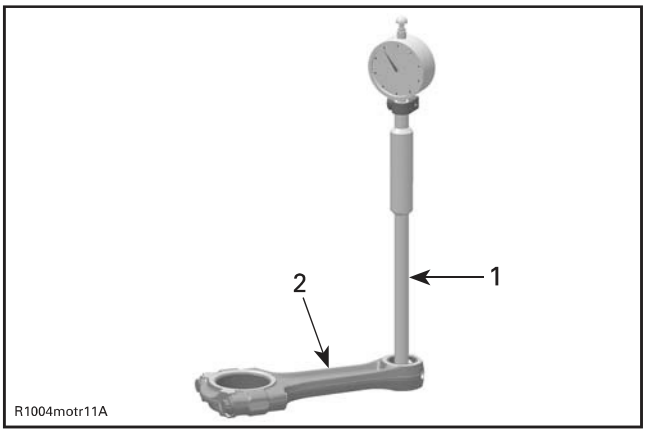

TYPICAL
1. Bore gauge
2. Connecting rod

CONNECTING ROD SMALL END DIAMETER	
NEW	17.010 mm to 17.020 mm (.6697 in to .6701 in)
SERVICE LIMIT	17.060 mm (.6717 in)

If the connecting rod small end diameter is out of specification, replace the connecting rod.

To obtain the radial play, calculate the difference between the piston pin diameter (*INSPECTING THE PISTON PIN*) and the connecting rod small end inner diameter.

CONNECTING ROD SMALL END RADIAL PLAY	
SERVICE LIMIT	0.040 mm (.0016 in)

Connecting Rod Big End Radial Play

1. Measure inside diameter of connecting rod big end.
   1.1 Install the OLD plain bearings as they were mounted initially.
   1.2 Perform the tightening procedure as described in *INSTALLING PISTON AND CONNECTING ROD* in this subsection.

   NOTE: To measure the connecting rod big end diameter, ALWAYS use the OLD connecting rod screws.

   1.3 Measure inside diameter in longitudinal direction of the connecting rod.

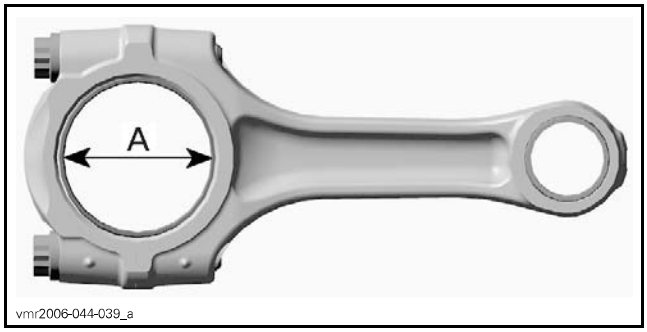

TYPICAL
A. Connecting rod big end bearing

CONNECTING ROD BIG END DIAMETER	
SERVICE LIMIT	36.06 mm (1.4197 in)

To obtain the connecting rod big end radial play, calculate the difference between the big end diameter and the crankshaft pin diameter (see *INSPECTING THE CRANKSHAFT*).

CONNECTING ROD BIG END RADIAL PLAY	
SERVICE LIMIT	0.080 mm (.0031 in)

If connecting rod big end diameter is out of specification, install NEW plain bearings.

Inspecting the Piston Pin

Using synthetic abrasive woven, clean piston pin from deposits.

Inspect piston pin for scoring, cracks or other damage.

Measure piston pin diameter, using a micrometer. See the following illustration for the proper measurement position.

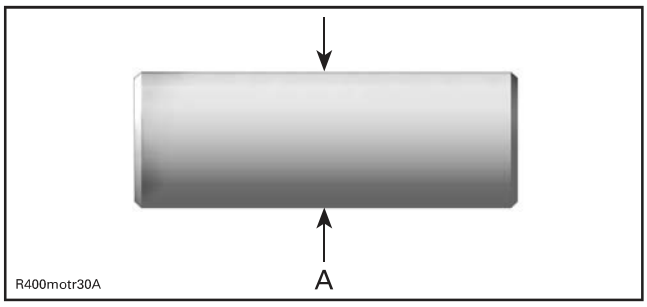

TYPICAL
A. Measure piston pin diameter here

PISTON PIN DIAMETER	
NEW	16.996 mm to 17.00 mm (.6691 in to .6693 in)
SERVICE LIMIT	16.986 mm (.6687 in)

Replace the piston pin if it is out of specification.

Inspecting the Piston

Inspect piston for scoring, scuffing, cracks or other damage. Replace piston and piston rings if necessary.

Using a micrometer, measure piston perpendicularly (90°) to piston pin axis at 8.5 mm (11/32 in) from the skirt edge.

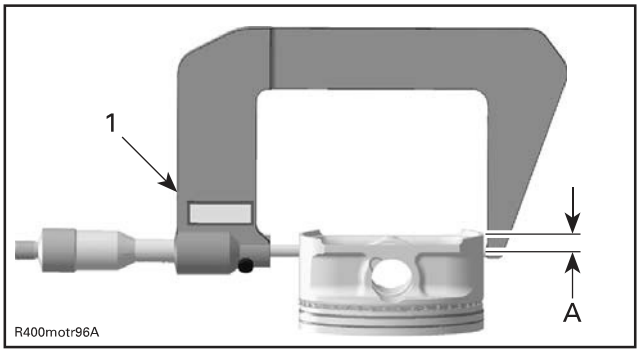

TYPICAL
1. Measuring perpendicularly (90°) to piston pin axis
A. 8.5 mm (11/32 in)

PISTON MEASUREMENT	
NEW	73.950 mm to 73.966 mm (2.9114 in to 2.912 in)
SERVICE LIMIT	73.920 mm (2.9102 in)

Replace piston if it is out of specification.

Piston/Cylinder Clearance

1. Adjust and lock a micrometer to the piston dimension.

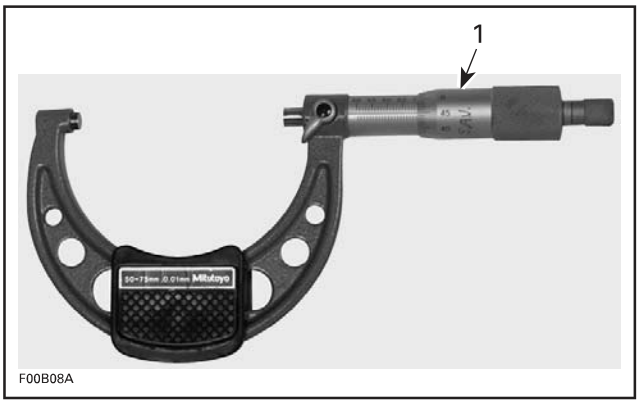

TYPICAL
1. Micrometer set to the piston dimension

NOTE: Make sure used piston is not worn.

2. With the micrometer locked at step 1, adjust a cylinder bore gauge to the micrometer dimension and set the indicator to 0 (zero).

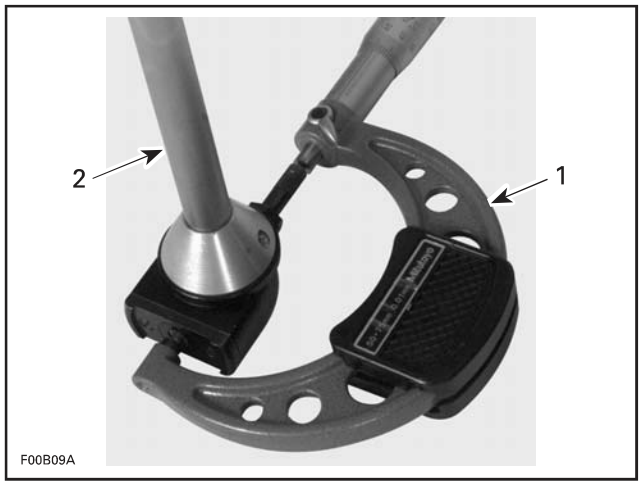

TYPICAL
1. Use the micrometer to set the cylinder bore gauge
2. Cylinder bore gauge

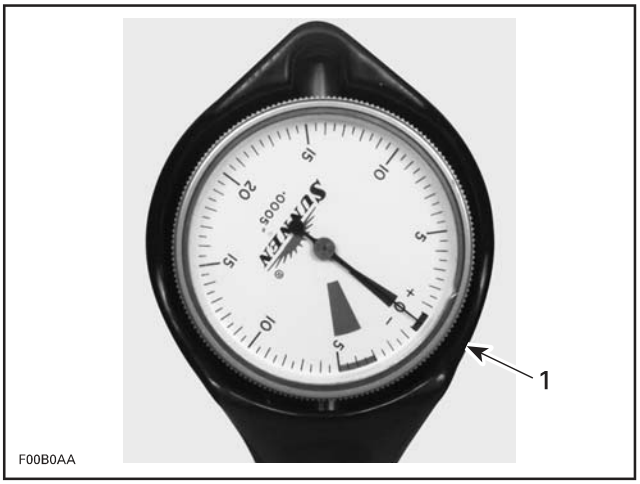

TYPICAL
1. Indicator set to 0 (zero)

NOTE: Make sure the cylinder bore gauge indicator is set exactly at the same position as with the micrometer, otherwise the reading will be false.

3. Position the cylinder bore gauge 35 mm (1-3/8 in) below the cylinder head mating surface, measuring perpendicularly (90°) to piston pin axis.
4. Read the measurement on the cylinder bore gauge. The result is the exact piston/cylinder clearance.

PISTON/CYLINDER CLEARANCE	
NEW	0.037 mm to 0.067 mm (.0015 in to .0026 in)
SERVICE LIMIT	0.080 mm (.0031 in)

If clearance exceeds the specified tolerance, replace the piston and repeat the measurement procedure.

Assembling Piston and Connecting Rod

For assembly, reverse the disassembly procedure. Pay attention to the following details.

1. Apply engine oil on the piston pin.
2. Insert piston pin into piston and connecting rod.

NOTE: Ensure to reinstall all parts in their original position as marked during removal.

3. Install NEW piston pin circlip(s).

REQUIRED TOOL	
PISTON CIRCLIP INSTALLER (P/N 529 036 426)	

NOTICE Always replace removed piston pin circlips by NEW ones.

3.1 Place the circlip in the sleeve and push piston circlip installer handle until circlip reaches the mid position in the sleeve.

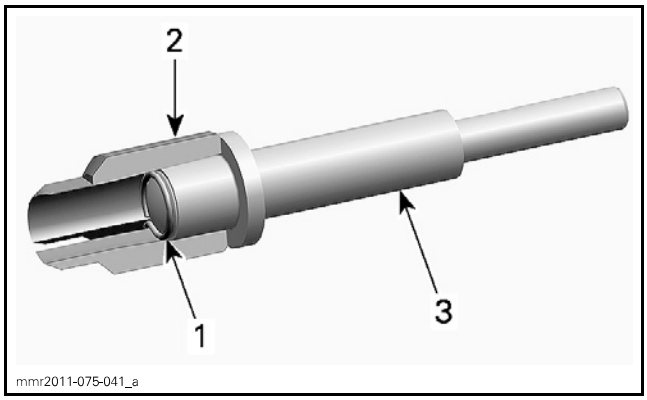

TYPICAL
1. Circlip
2. Sleeve
3. Installer handle

3.2 Put the distance sleeve on the installer handle.

3.3 Push piston circlip installer handle until distance sleeve makes contact with the sleeve.

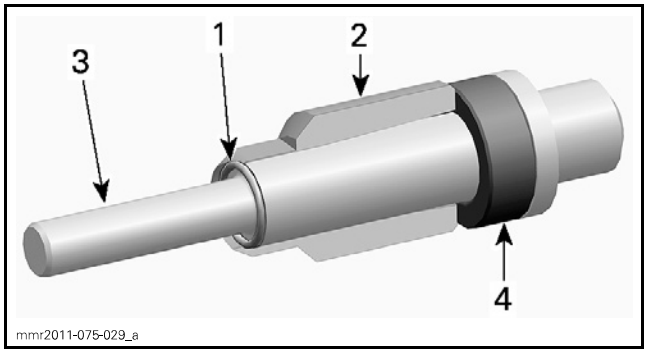

1. Circlip
2. Sleeve
3. Installer handle
4. Distance sleeve

3.4 Remove distance sleeve and insert installer handle into the sleeve.

3.5 Insert the end of the handle into the piston pin, then push to engage the circlip into the piston groove.

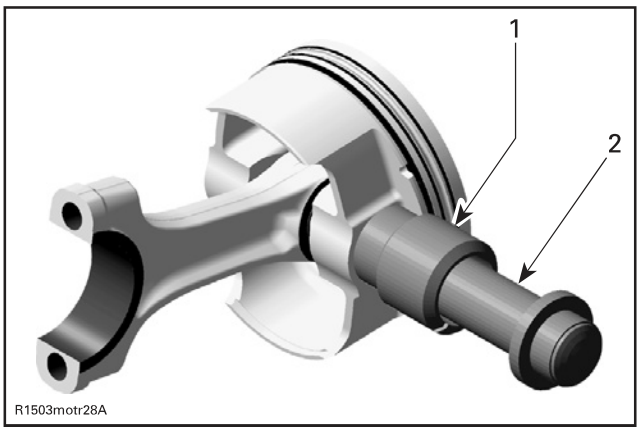

TYPICAL
1. *Sleeve with piston circlip inside*
2. *Piston clip installer handle*

NOTE: Take care that the hook of the piston pin circlip is positioned properly.

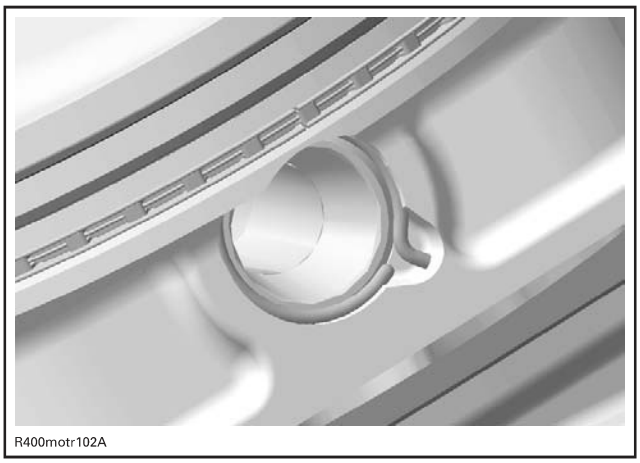

CORRECT POSITION OF THE PISTON PIN CIRCLIP

NOTICE If piston pin circlip installation fails, repeat step 3 by using a NEW circlip.

4. Correctly install plain bearings and carefully clean split surface on both sides (cracked area) with compressed air.

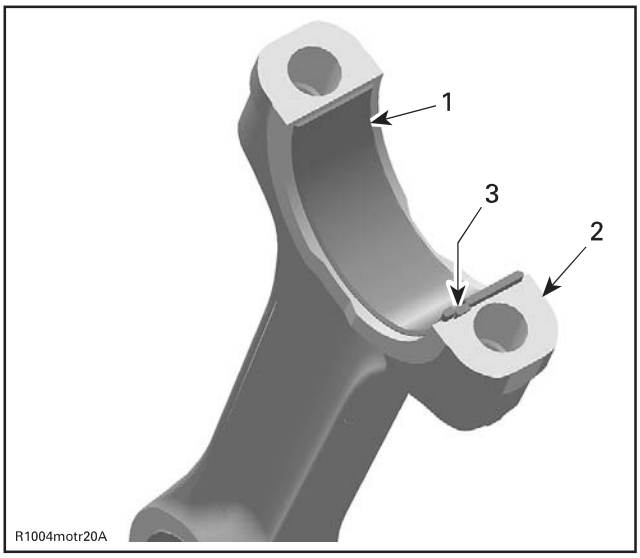

TYPICAL
1. *Half bearing of connecting rod big end*
2. *Split surface of the connecting rod*
3. *Protrusion of bearing in line with connecting rod groove*

NOTICE The arrow on top of the piston and the punched marks on the connecting rods must always point towards exhaust.

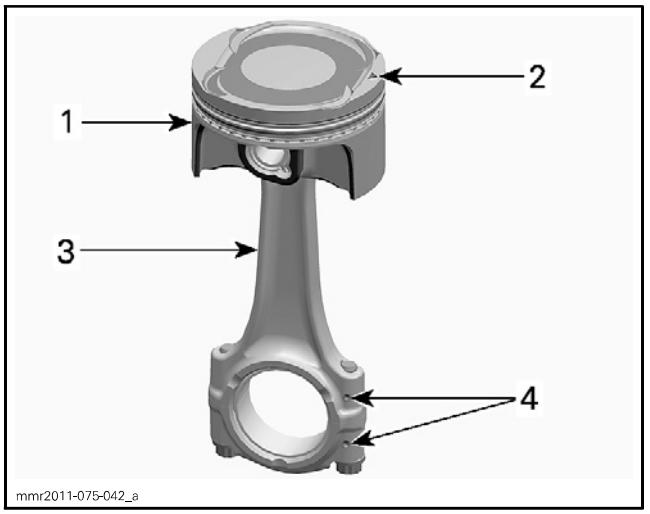

1. *Piston*
2. *Arrow on top*
3. *Connecting rod*
4. *Punched marks*

Installing the Piston and Connecting Rod

1. Use engine oil and lubricate:
   - Piston
   - Piston rings
   - Cylinder bore
   - Connecting rod bearings.
2. Slide piston into cylinder bore. Pay attention to the following.

REQUIRED TOOL	
PISTON RING COMPRESSOR (P/N 529 036 208)	

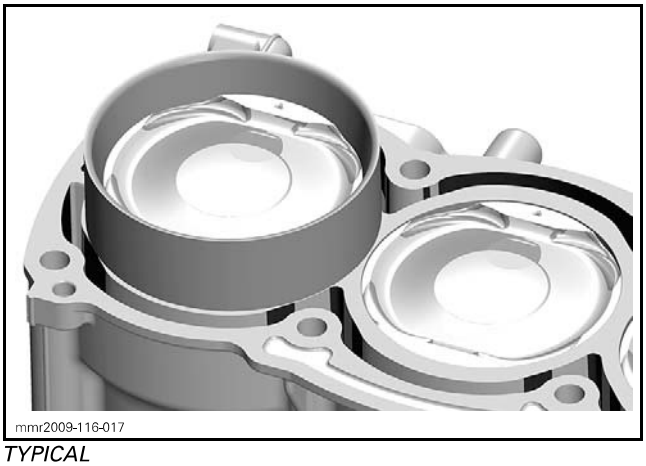

TYPICAL

2.1 If reused, install piston in its original bore.

2.2 Make sure piston rings are properly spaced.

NOTICE The ring gaps of both compression rings should always be 180° from each other and 90° from the arrow on top of the piston.

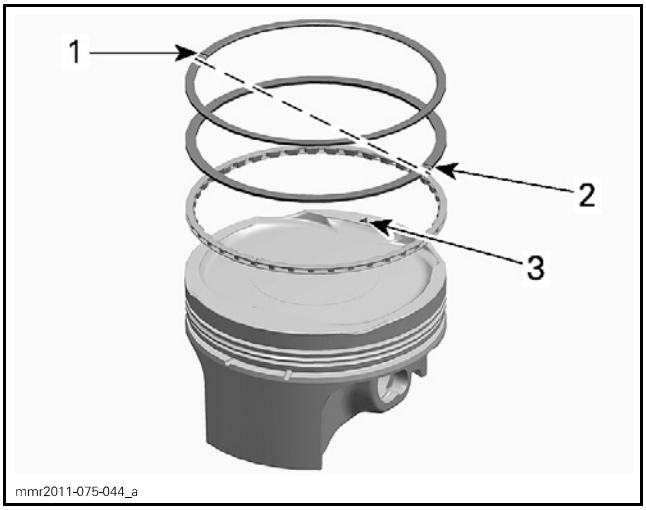

RING GAPS AT 180° FROM EACH OTHER AND 90° FORM ARROW
1. *Rectangular ring - ring gap*
2. *Taper-face ring - ring gap*
3. *Arrow*

2.3 The arrow on top of the piston must point towards exhaust.

NOTICE Piston installed with the arrow in the wrong direction would cause serious engine damage.

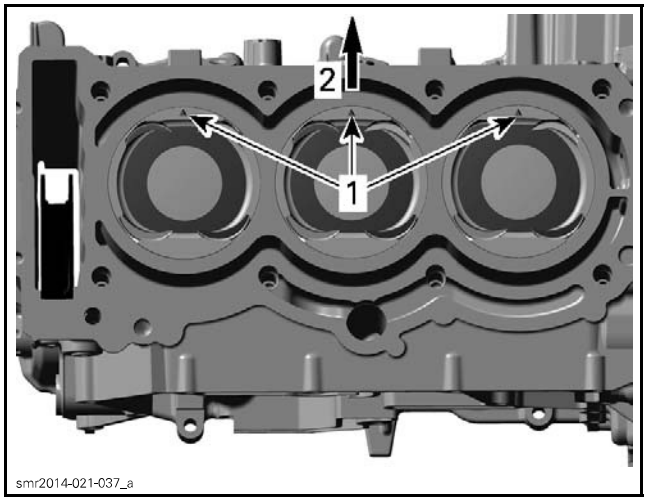

1. *Arrows*
2. *Exhaust*

3. Turn cylinder block upside down.
4. Install *CRANKSHAFT* as per procedure in this subsection.
5. Oil the crankshaft pin.
6. Install connecting rod caps.

NOTE: Printed marks on connecting rod and cap must point together.

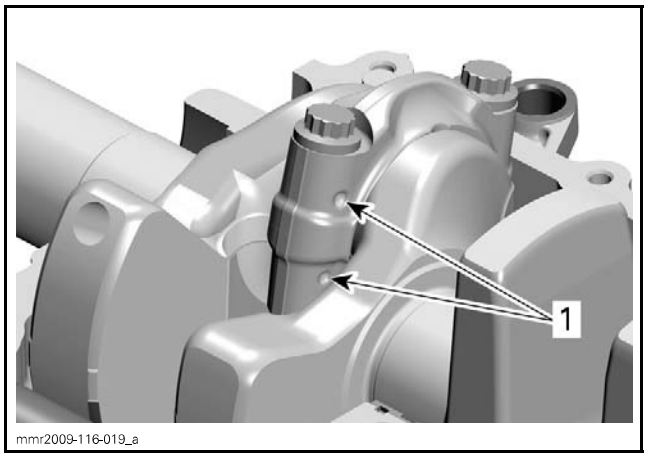

TYPICAL
1. *Printed marks*

NOTICE This assembly uses stretch screws. Always use NEW screws and strictly adhere to the tightening procedure.

7. Tighten connecting rod screws as follows:

7.1 Torque both connecting rod screws of a connecting rod.

TIGHTENING PROCEDURE		
Connecting rod screws	STEP A	12 N•m ± 2 N•m (106 lbf•**in** ± 18 lbf•**in**)

7.2 Use a torque angle gauge to carry out the second step.

TIGHTENING PROCEDURE		
Connecting rod screws	STEP B	Additional 70° ± 5°

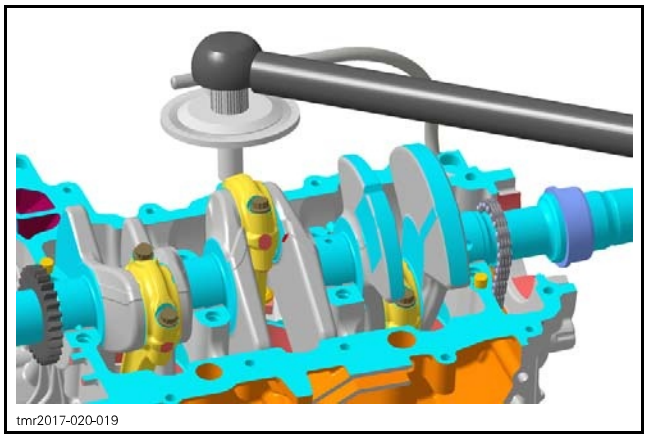
tmr2017-020-019

NOTICE Failure to strictly follow this procedure may cause screws to loosen and lead to severe engine damage.

8. Install all other removed parts.

PISTON RINGS

Removing the Piston Ring

1. Remove piston, see procedure in this subsection.
2. Remove rings from piston.

Inspecting the Piston Ring

Ring/Piston Groove Clearance

Using a feeler gauge measure each ring/piston groove clearance.

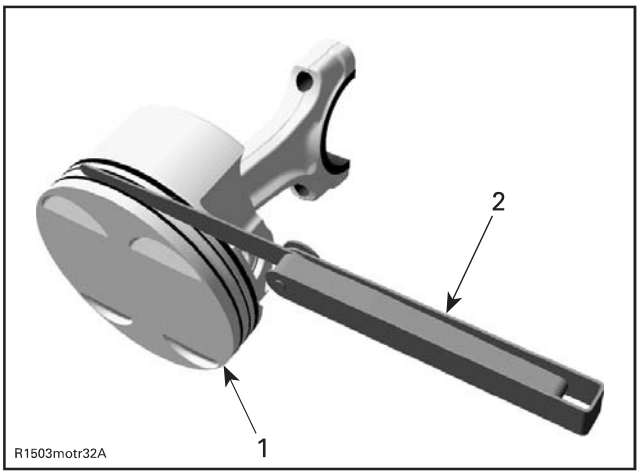

TYPICAL
1. Piston
2. Feeler gauge

RING/PISTON GROOVE CLEARANCE	
UPPER COMPRESSION RING	
NEW	0.030 mm to 0.066 mm (.0012 in to .0026 in)
SERVICE LIMIT	0.120 mm (.0047 in)
LOWER COMPRESSION RING	
NEW	0.020 mm to 0.056 mm (.0008 in to .0022 in)
SERVICE LIMIT	0.120 mm (.0047 in)
OIL SCRAPER RING	
NEW	0.010 mm to 0.040 mm (.0004 in to .0016 in)
SERVICE LIMIT	0.150 mm (.0059 in)

If clearance is out of specification, the piston and rings should be replaced.

Ring End Gap

1. Place piston ring in the cylinder bore between 8 mm to 16 mm (5/16 in to 5/8 in) from the top of cylinder.

NOTE: In order to correctly position the ring in the cylinder bore, use a piston as a pusher.

2. Using a feeler gauge, check ring end gap.

RING END GAP	
UPPER COMPRESSION RING	
NEW	0.20 mm to 0.35 mm (.008 in to .014 in)
SERVICE LIMIT	1.20 mm (.047 in)
LOWER COMPRESSION RING	
NEW	0.30 mm to 0.50 mm (.012 in to .02 in)
SERVICE LIMIT	1.20 mm (.047 in)
OIL SCRAPER RING	
NEW	0.20 mm to 0.70 mm (.008 in to .028 in)
SERVICE LIMIT	1.20 mm (.047 in)

If ring end gap is out of specification, replace piston rings.

Installing the Piston Ring

1. Install piston rings in the following order.

   NOTE: Use a ring expander to prevent breakage during installation. The oil ring must be installed by hand.

   1.1 Install oil scraper ring.

   1.2 Install the lower compression ring with the letter "N" facing up.

   1.3 Install upper compression ring with the letter "N" facing up.

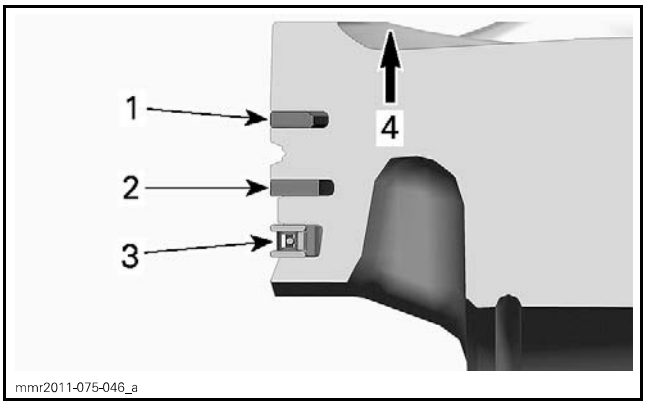

1. Rectangular ring
2. Taper-face ring
3. Oil scraper ring
4. Letter "N" facing up

NOTICE Ensure that upper and lower compression rings are not interchanged.

2. Check that rings rotate smoothly after installation.

CONTINUOUSLY VARIABLE TRANSMISSION (CVT)

SERVICE TOOLS

Description	Part Number	Page
CLUTCH HOLDER	529 036 428	6, 15, 21
CLUTCH PULLER	529 035 746	6
DRIVEN PULLEY ADAPTER	708 200 500	15
DRIVEN PULLEY ADAPTER	708 200 720	5, 15
DRIVEN PULLEY EXTRACTOR	529 036 352	15
DRIVEN PULLEY SPACER	529 036 351	16
GOVERNOR CUP PULLER	529 036 350	7
PULLER/LOCKING TOOL	529 000 088	5, 15
PULLEY SPRING COMPRESSOR TOOL	529 036 012	9, 16

SERVICE TOOLS – OTHER SUPPLIER

Description	Part Number	Page
SNAP-ON HAMMER	CJ125-6	17
SNAP-ON SCREW	CJ93-1	17

SERVICE PRODUCTS

Description	Part Number	Page
ISOFLEX GREASE TOPAS NB 52	293 550 021	14
LOCTITE 243 (BLUE)	293 800 060	21
PULLEY FLANGE CLEANER	413 711 809	10, 19
XPS BRAKES AND PARTS CLEANER (USA)	219 701 705	20
XPS BRAKES AND PARTS CLEANER	219 701 776	20

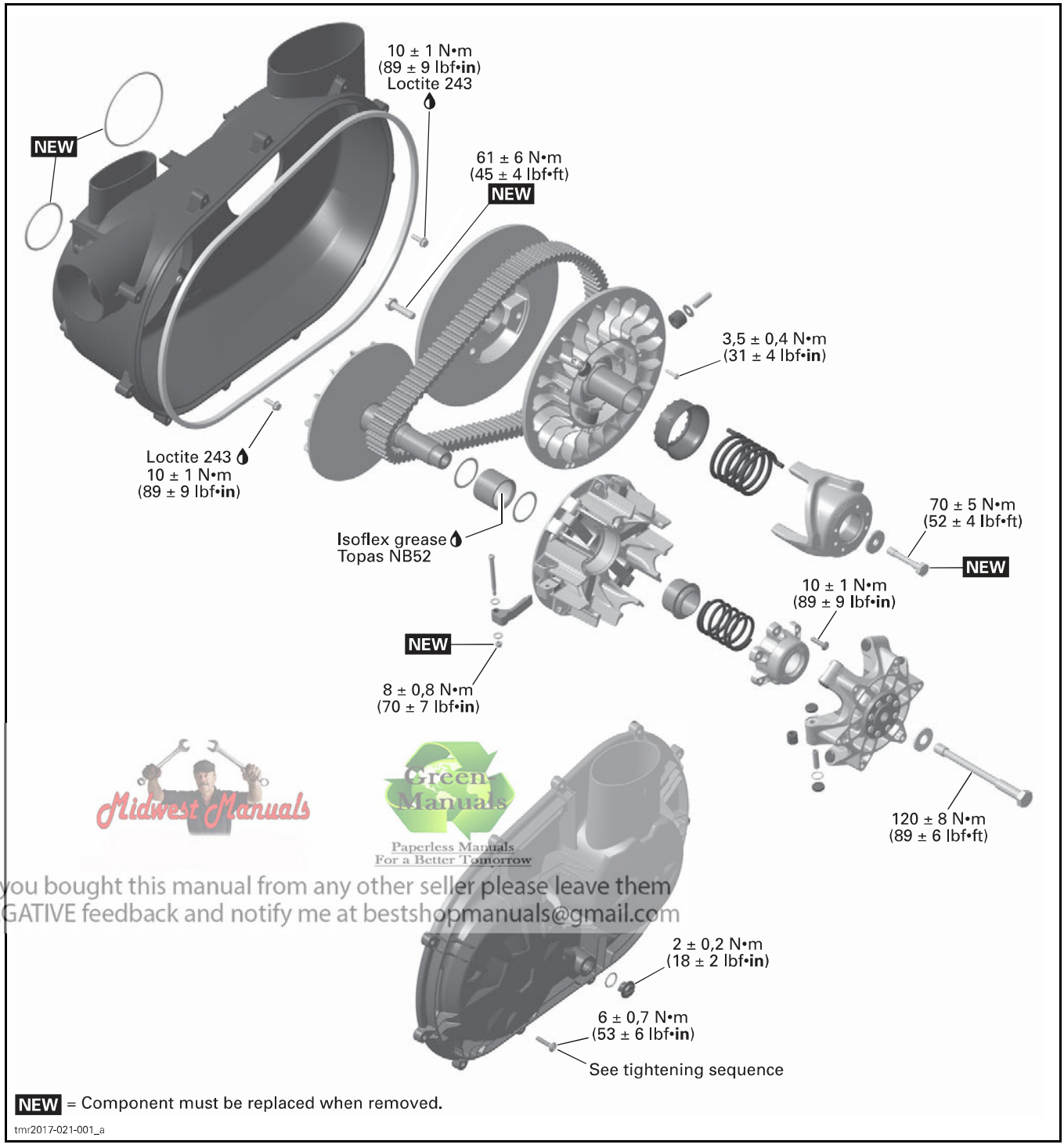

Midwest Manuals
Green Manuals
Paperless Manuals
For a Better Tomorrow
If you bought this manual from any other seller please leave them
NEGATIVE feedback and notify me at bestshopmanuals@gmail.com

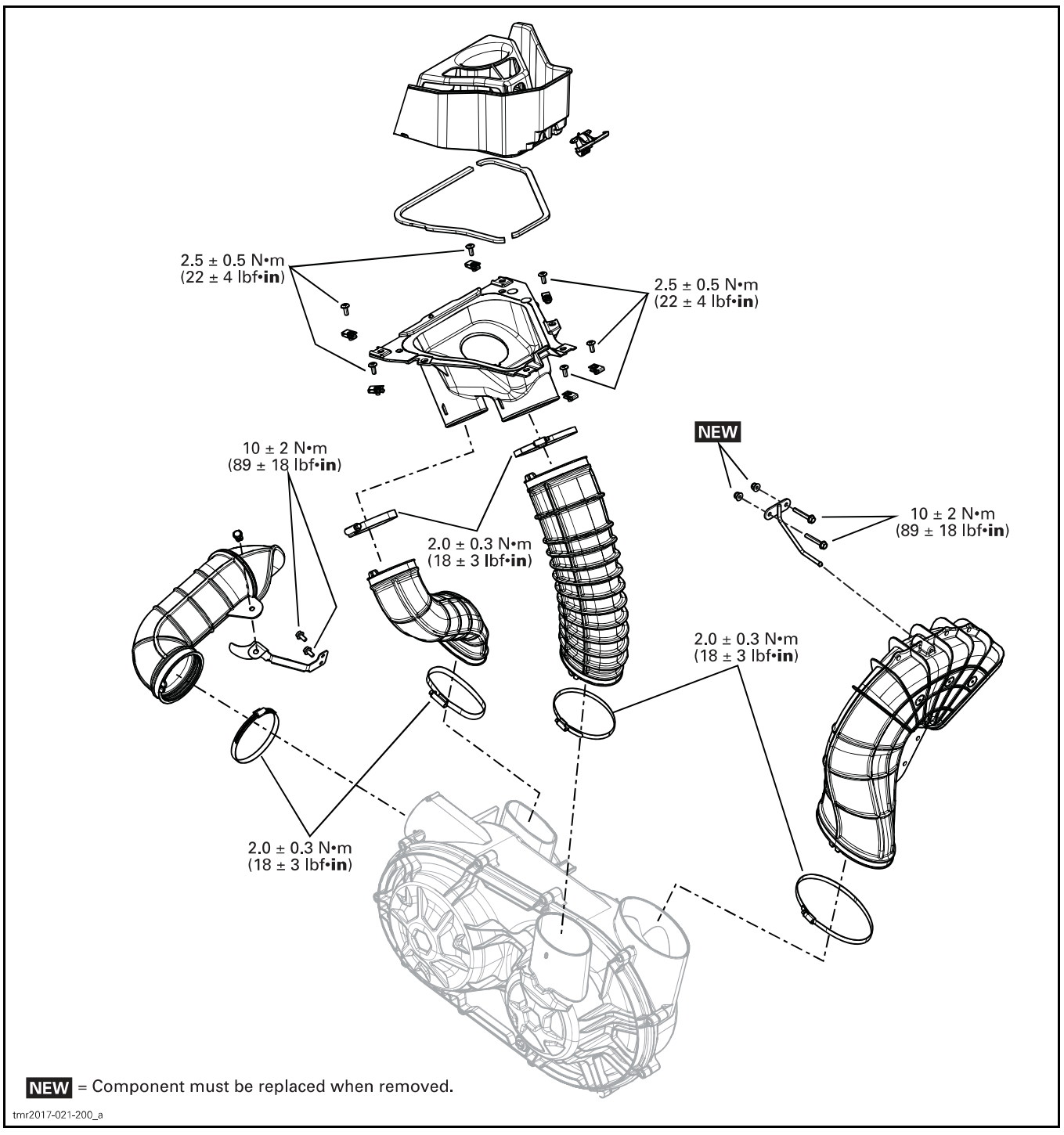
2.5 ± 0.5 N•m
(22 ± 4 lbf•in)
2.5 ± 0.5 N•m
(22 ± 4 lbf•in)
NEW
10 ± 2 N•m
(89 ± 18 lbf•in)
10 ± 2 N•m
(89 ± 18 lbf•in)
2.0 ± 0.3 N•m
(18 ± 3 lbf•in)
2.0 ± 0.3 N•m
(18 ± 3 lbf•in)
2.0 ± 0.3 N•m
(18 ± 3 lbf•in)
NEW = Component must be replaced when removed.
tmr2017-021-200_a

GENERAL

NOTE: For a better understanding, the following illustrations are taken with engine out of vehicle. To perform the following instructions, it is not necessary to remove engine.

This CVT is lubrication free. Never lubricate any components except drive pulley hub.

⚠ WARNING

Never touch CVT while engine is running. Never drive vehicle when CVT cover is removed.

⚠ WARNING

Any drive pulley repairs must be performed by an authorized Can-Am dealer. Subcomponent installation and assembly tolerances require strict adherence to procedures detailed.

⚠ WARNING

The clutch assembly is a precisely balanced unit. Never replace parts with used parts from another clutch assembly.

PROCEDURES

CVT COVER

Draining the CVT Cover

If water is present in CVT cover, it can be drained as follows:

1. Turn bayonet cap 90° counterclockwise to open it.
2. Remove bayonet cap and O-ring.

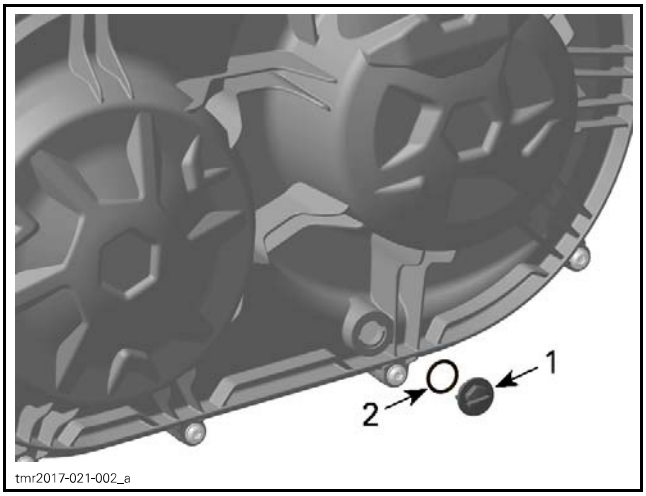

1. Bayonet cap
2. O-ring

3. Let water drain from CVT cover.
4. Reinstall bayonet cap and O-ring.

TIGHTENING TORQUE	
Bayonet cap	2 N•m ± 0.2 N•m (18 lbf•**in** ± 2 lbf•**in**)

NOTICE **If any debris entered the CVT cover, CVT must be cleaned and inspected.**

Removing the CVT Cover

Detach CVT hoses from CVT cover.

Remove:
- Retaining screws
- CVT cover
- Gasket.

NOTE: Remove the center top screw last to support the cover during removal.

NOTICE **Do not use and impact tool to remove CVT cover screws.**

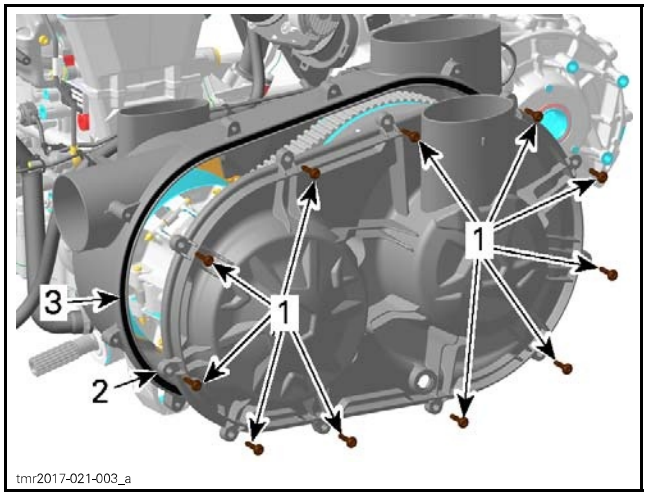

1. Retaining screws
2. CVT cover
3. Gasket

Installing the CVT Cover

Install the center top screw of first.

Tighten the CVT cover retaining screws as per following sequence.

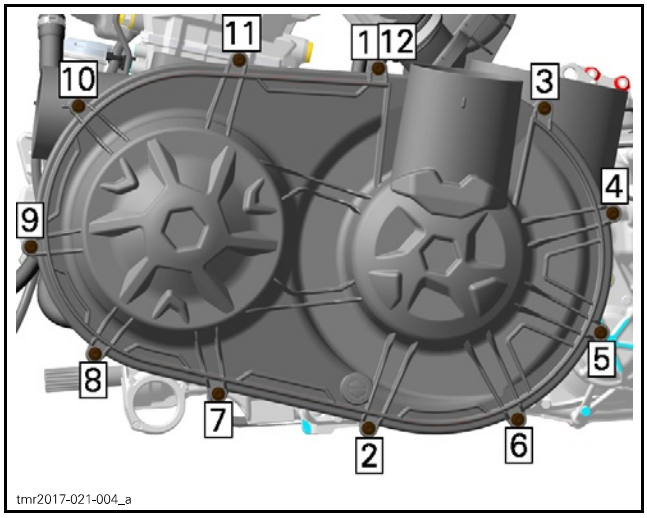

TIGHTENING TORQUE	
CVT cover retaining screws	6 N•m ± 0.7 N•m (53 lbf•**in** ± 6 lbf•**in**)

DRIVE BELT

Removing the Drive Belt

NOTICE **In case of a drive belt failure, the CVT, cover and air outlet must be cleaned.**

Remove *CVT COVER*.

REQUIRED TOOLS	
PULLER/LOCKING TOOL (P/N 529 000 088)	
DRIVEN PULLEY ADAPTER (P/N 708 200 720)	

Screw in the driven pulley adapter into the driven pulley shaft.

Screw in the driven pulley extractor into the threaded offset hole of the adapter.

Tighten the extractor to open the pulley.

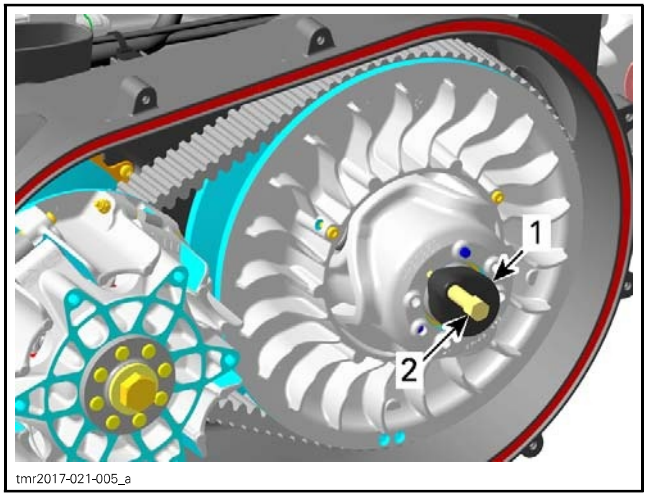

1. Driven pulley adapter
2. Driven pulley extractor

To remove belt, slip the belt over the top edge of fixed sheave, as shown.

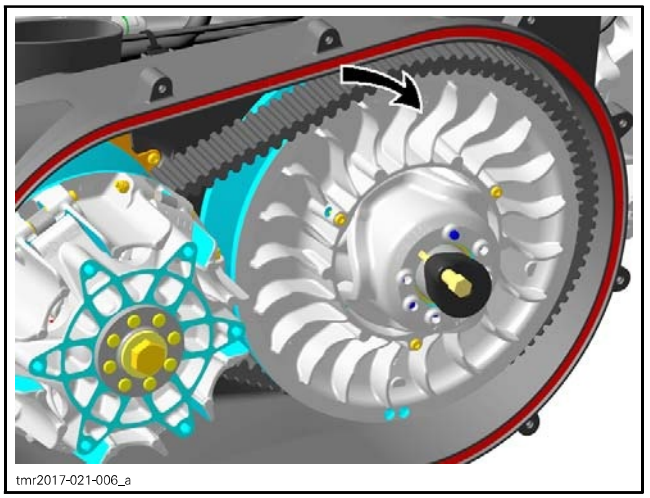

Inspecting the Drive Belt

For drive belt inspection refer to *INSPECTING THE DRIVE BELT* in the *PERIODIC MAINTENANCE PROCEDURES* subsection.

Installing the Drive Belt

For installation, reverse the removal procedure. Pay attention to following details.

The maximum drive belt life span is obtained when the drive belt has the proper rotation direction. Install it so that the arrow printed on belt is pointing towards front of the vehicle, viewed from top.

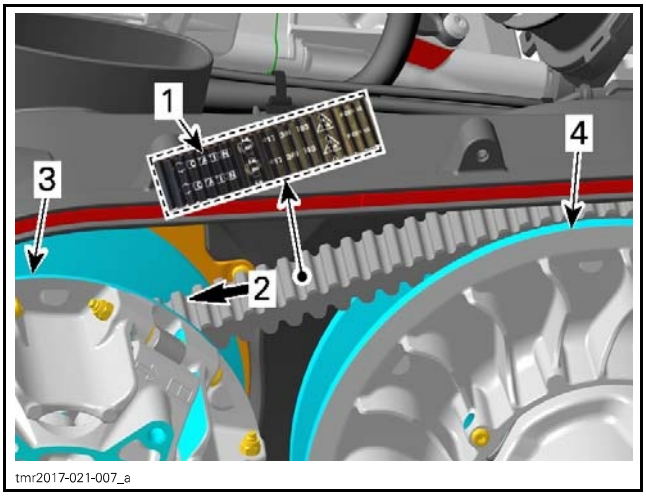

1. Arrow printed on belt
2. Rotation direction
3. Drive pulley (front)
4. Driven pulley (rear)

DRIVE PULLEY

Removing the Drive Pulley

1. Remove *DRIVE BELT*, see procedure in this subsection.
2. Prior to removing the drive pulley, mark sliding sheave and governor cup to ensure correct indexation at reinstallation.

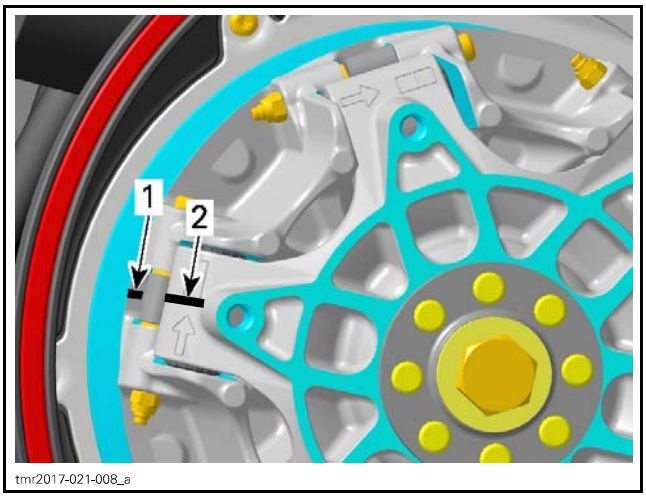

1. Mark on drive pulley sliding sheave
2. Mark on governor cup

3. Lock the drive pulley.

REQUIRED TOOL	
CLUTCH HOLDER (P/N 529 036 428)	

4. Loosen the drive pulley screw.

NOTICE Never use any type of impact wrench for drive pulley removal.

NOTE: Do not unscrew the drive pulley screw completely.

5. Remove service tool.
6. Apply axial pressure with your hand on the governor cup until clutch puller for removal is installed.
7. Remove:
   - Drive pulley screw
   - Spring washer.

⚠ CAUTION Sliding sheave of drive pulley is spring loaded.

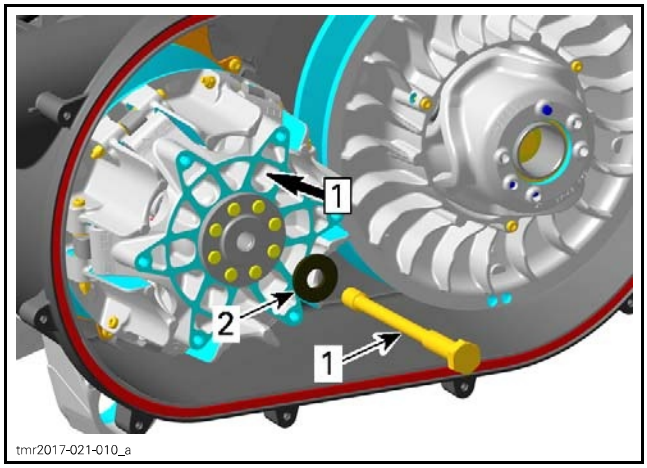

Step 1: Push
1. Drive pulley screw
2. Spring washer

8. Screw clutch puller in fixed sheave to remove drive pulley.

NOTICE Use only recommended tool.

REQUIRED TOOL	
CLUTCH PULLER (P/N 529 035 746)	

Disassembling the Drive Pulley

Drive Pulley

Screw clutch puller into fixed sheave shaft (maximum protrusion of 63 mm (2-1/2 in)).

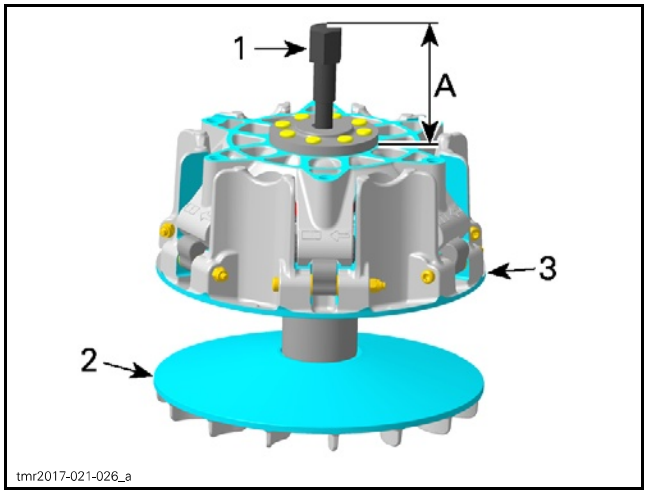

A. Maximum protrusion of 63 mm (2-1/2 in)
1. Clutch puller
2. Fixed sheave
3. Sliding sheave

Place the governor cup puller on governor cup.

REQUIRED TOOL	
GOVERNOR CUP PULLER (P/N 529 036 350)	

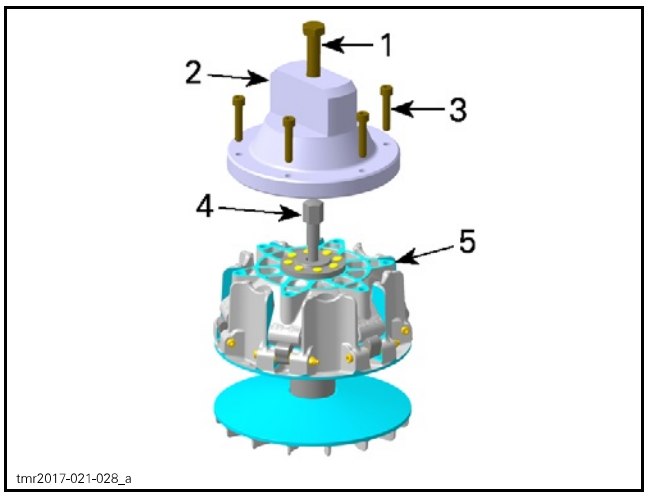

1. M16 x 80 puller screw
2. Governor cup puller
3. M8 x 35 puller retaining screws
4. Clutch puller
5. Governor cup

NOTICE Ensure that the hexagonal head of the clutch puller engages in the slot of the governor cup puller.

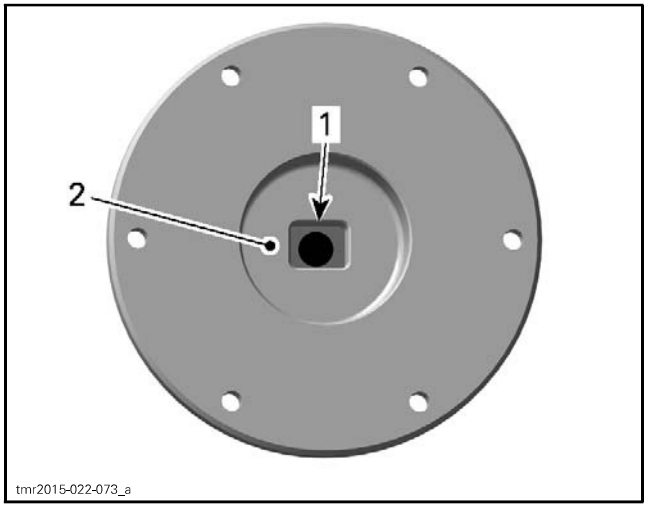

1. Slot
2. Inner side of puller

Tighten M8 x 35 puller retaining screws.

TIGHTENING TORQUE	
M8 x 35 puller retaining screws	20 N•m ± 2 N•m (15 lbf•ft ± 1 lbf•ft)

Put the governor cup puller into a vice and screw in the M16 x 80 puller screw.

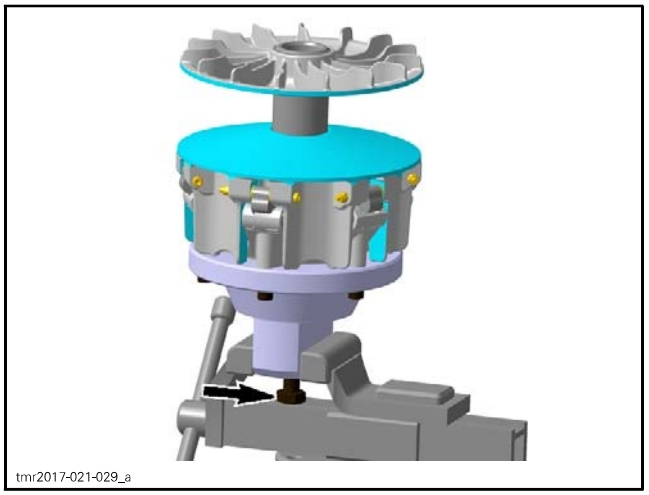

SCREW IN M16 X 80 PULLER SCREW

⚠ CAUTION The fixed sheave will bounce up.

Remove the governor cup puller from the drive pulley.

Governor Cup

Carefully lift governor cup until slider shoes come at their highest position into guides.

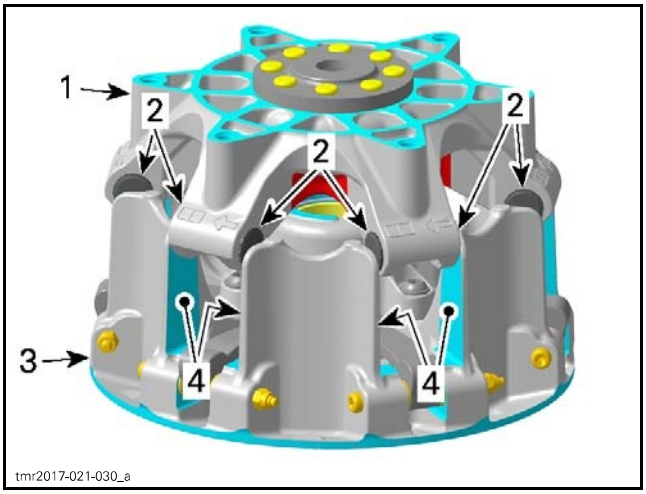

1. *Governor cup*
2. *Slider shoes*
3. *Sliding sheave*
4. *Guides*

NOTE: The following procedure is not necessary except if roller must be removed. Refer to *INSPECTING THE DRIVE PULLEY* before proceeding.

Remove slider shoes out of each bearing sleeve. Use a flat screwdriver if necessary.

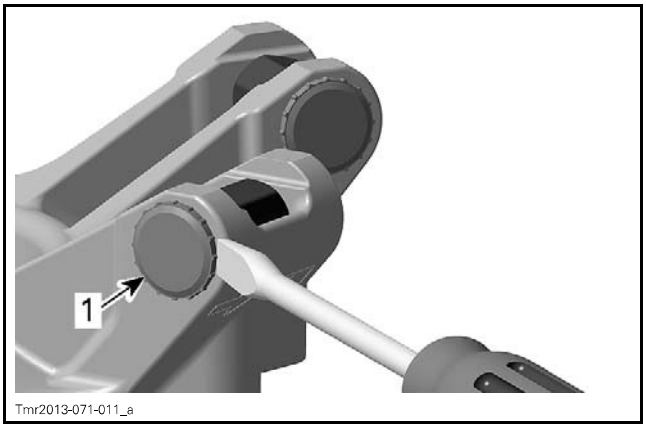

1. *Slider shoe*

Put governor cup on a vice to push out bearing sleeve of roller in the foreseen direction (against arrow). Use an appropriate punch (diameter of punch must be smaller than the bearing sleeve diameter).

NOTICE **Do not clamp the governor cup in the vice to push out bearing sleeve. Governor cup will be damaged.**

NOTE: Use protection plates to avoid marks and/or damages to the governor cup.

NOTICE **Always replace all rollers at the same time. Partly worn rollers may cause damage to the CVT system.**

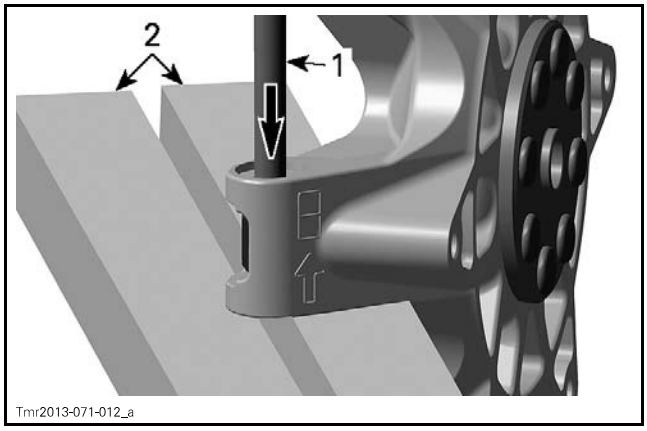

1. *Punch*
2. *Vice*

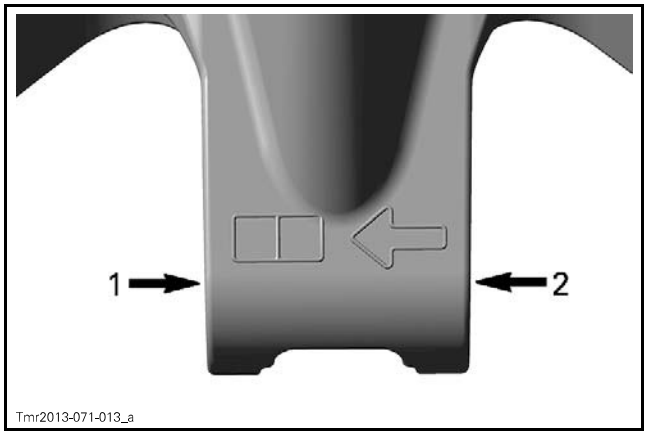

1. *Removal direction*
2. *Assembly direction*

NOTE: Whenever removing a governor cup with already two marked boxes replace it by a NEW one.

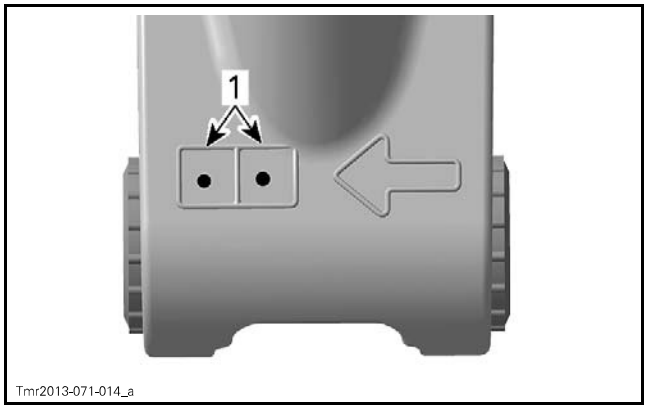

1. *Marked boxes*

Sliding Sheave

This drive pulley is equipped with 6 levers.

Remove:

– Lock nut
– Centrifugal lever pivot bolt

– Centrifugal lever
– Thrust washers.
and both

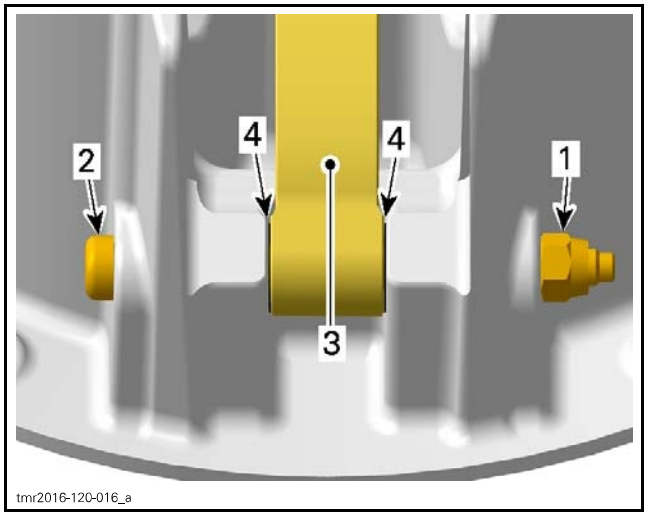

1. *Lock nut*
2. *Centrifugal lever pivot bolt*
3. *Centrifugal lever*
4. *Thrust washers*

Remove spring cover.

⚠ WARNING

Spring cover is under high clutch spring preload. Never attempt to remove spring cover without the recommended tools.

REQUIRED TOOL	
PULLEY SPRING COMPRESSOR TOOL (P/N 529 036 012)	

Install support guide of spring compressor in a vice.

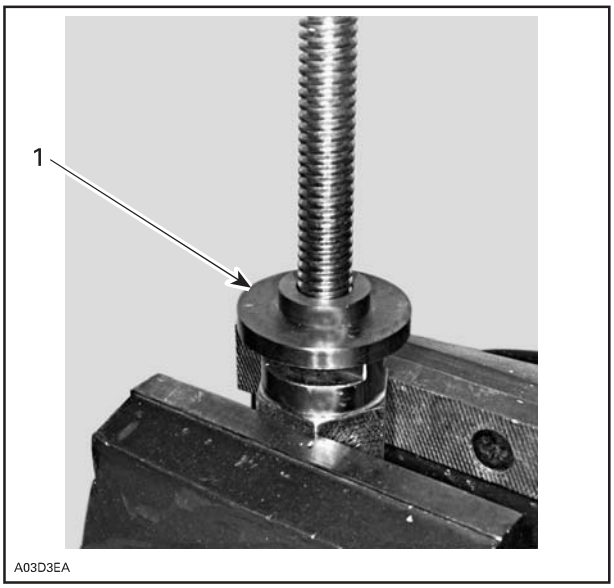

NOTE: The support guide will prevent bushing damage.

Place sliding sheave on support guide.

Place support cup over spring cover and tighten nut.

Remove spring cover screws.

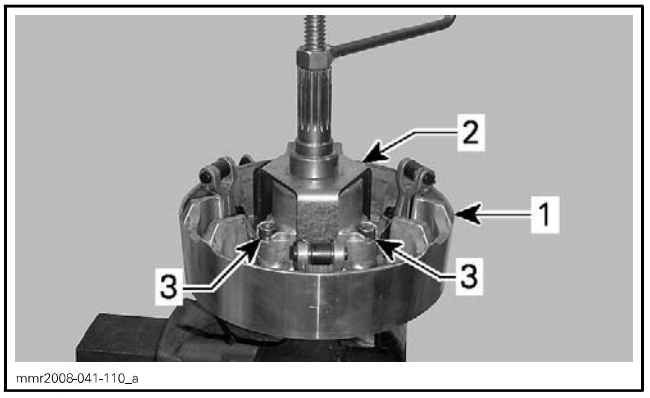

TYPICAL

Remove service tool.

Remove the following components from the sliding sheave.

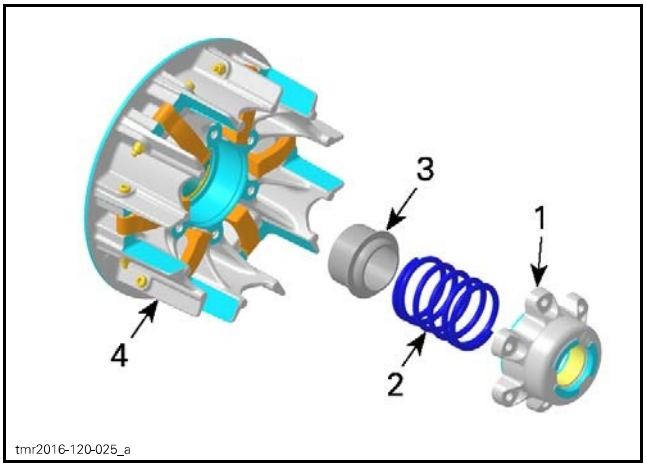

1. Spring cover
2. Spring
3. Spring seat
4. Sliding sheave

Fixed Sheave

Remove the following components from the fixed sheave.

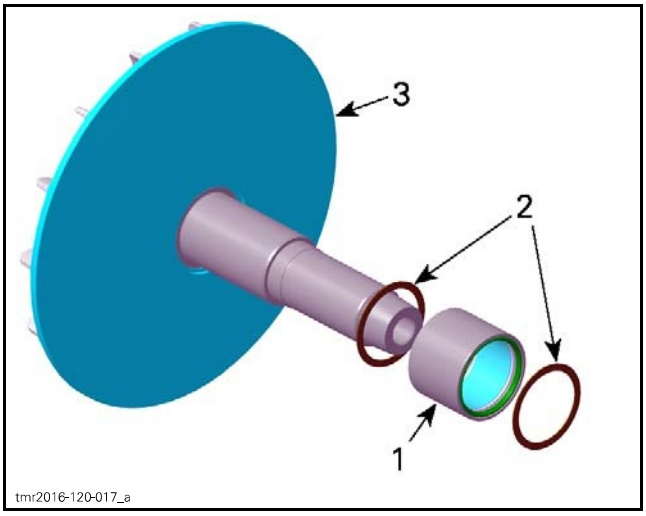

1. Hub
2. Thrust washers
3. Fixed sheave

Cleaning the Drive Pulley

Clean pulley faces and shaft with fine steel wool and dry cloth.

Using a paper towel with cleaning solvent, clean:
– Crankshaft tapered end
– Crankshaft threads
– Taper on the fixed sheave
– Threads of drive pulley screw.

DRIVE PULLEY CLEANING	
Service product	PULLEY FLANGE CLEANER (P/N 413 711 809)

NOTICE Avoid contact between cleaner and crankshaft seal because damage may occur.

Remove all hardened oil deposits that have baked on crankshaft and pulley tapered surfaces with coarse or medium steel wool and/or sand paper no. 600.

NOTICE Do not use any other type of abrasive.

Reclean mounting surfaces with paper towel and PULLEY FLANGE CLEANER (P/N 413 711 809).

Wipe off the mounting surfaces with a clean, dry paper towel.

NOTICE Mounting surfaces must be free of any oil, cleaner or towel residue.

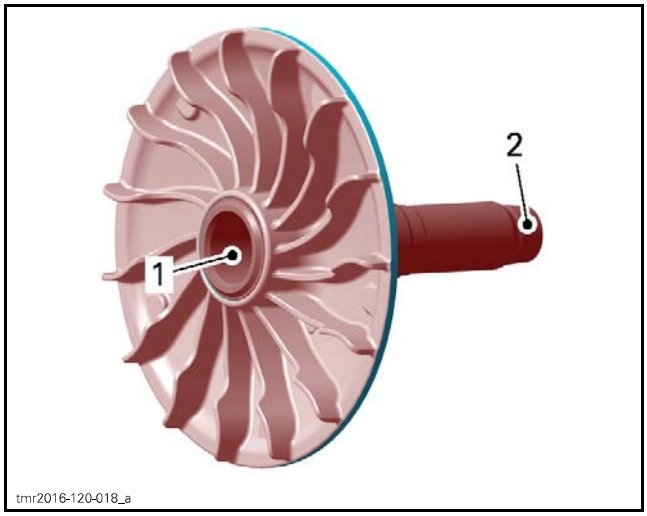

1. Taper of fixed sheave, crankshaft side
2. Tapered end of fixed sheave shaft

Only use petrol base cleaner when cleaning bushings of sliding sheave.

NOTICE Do not use acetone to clean bushing.

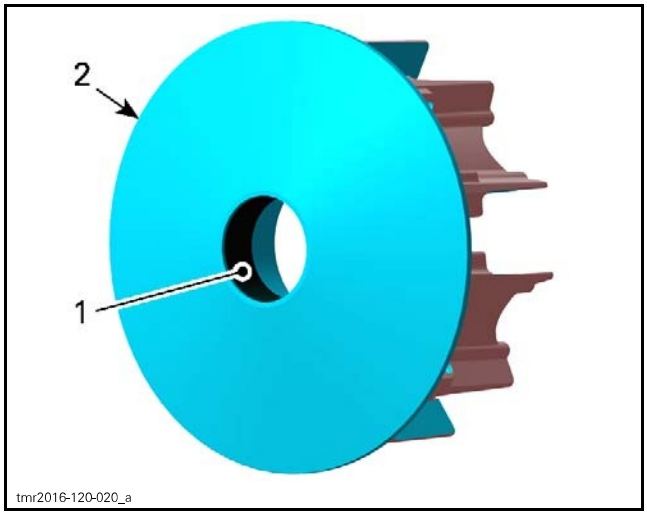

1. *Bushing*
2. *Sliding sheave*

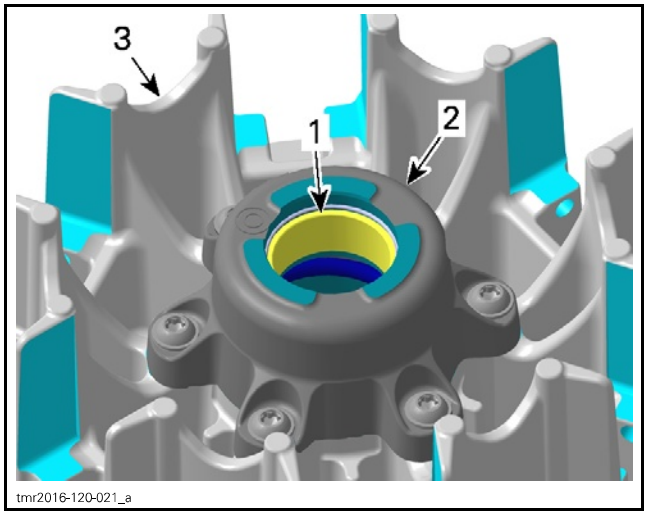

1. *Bushing*
2. *Spring cover*
3. *Sliding sheave*

Inspecting the Drive Pulley

Bushings

For bushing inspection, refer to *SLIDING SHEAVE AND SPRING COVER* in this subsection.

Governor Cup

Check governor cup for cracks or other visible damage. Replace if necessary.

Roller and Slider Shoe

Check if rollers move freely.

NOTICE **Whenever replacing rollers and slider shoes, always replace all rollers and slider shoes at the same time.**

Check slider shoes for visible wear. If chamfer is not present anymore, replace **ALL** slider shoes.

NOTE: If necessary, use a screwdriver to remove slider shoes.

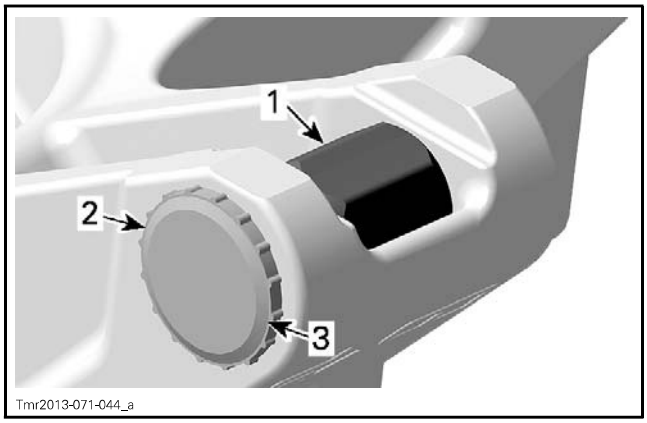

1. *Roller*
2. *Slider shoe*
3. *Chamfer*

Check roller outer width and inner diameter, replace if it is out of specification.

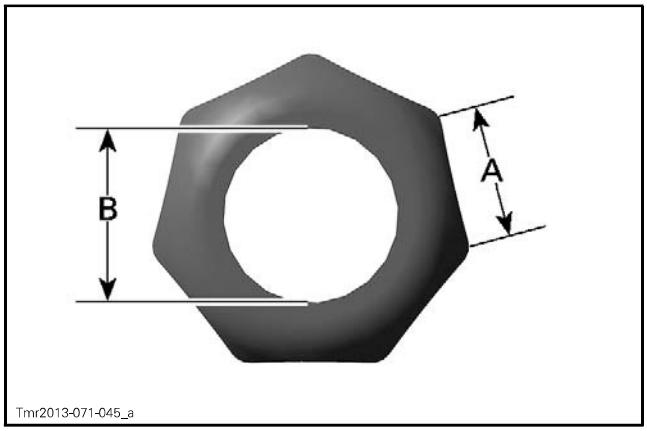

A. Roller flat spot width
B. Roller inner diameter

ROLLER FLAT SPOT WIDTH	
Service limit	8.50 mm (.335 in)

ROLLER INNER DIAMETER	
New	8.025 mm to 8.175 mm (.3159 in to .3219 in)
Service limit	9.000 mm (.3543 in)

Centrifugal Lever Pivot Bolt

Measure diameter of centrifugal lever pivot bolt, replace if it is out of specification.

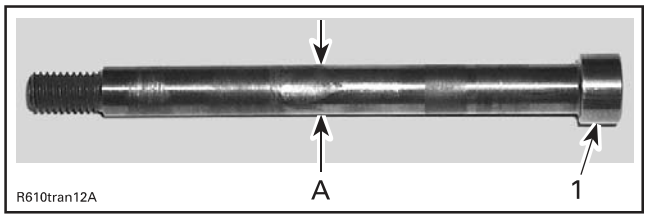

1. Centrifugal lever pivot bolt
A. Measure diameter here

CENTRIFUGAL LEVER PIVOT BOLT DIAMETER	
New	6.063 mm to 6.091 mm (.2387 in to .2398 in)
Service limit	6.000 mm (.2362 in)

Centrifugal Lever

Check bushing diameter in the centrifugal lever for wear. Replace centrifugal lever if necessary.

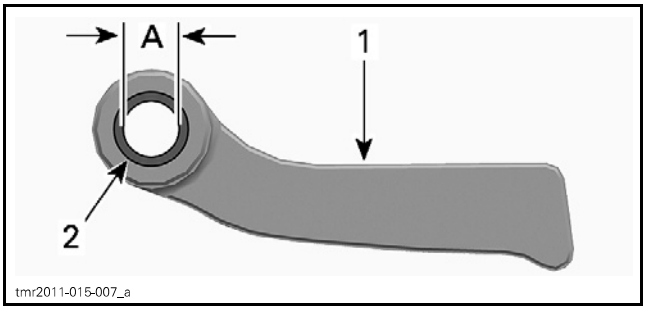

TYPICAL
1. Centrifugal lever
2. Bushing
A. Bushing inner diameter

CENTRIFUGAL LEVER BORE DIAMETER	
New	6.000 mm to 6.120 mm (.236 in to .241 in)
Service limit	6.200 mm (.244 in)

Replace centrifugal lever, thrust washers, centrifugal lever pivot bolts and lock nuts if the contact surfaces show heavy visible wear.

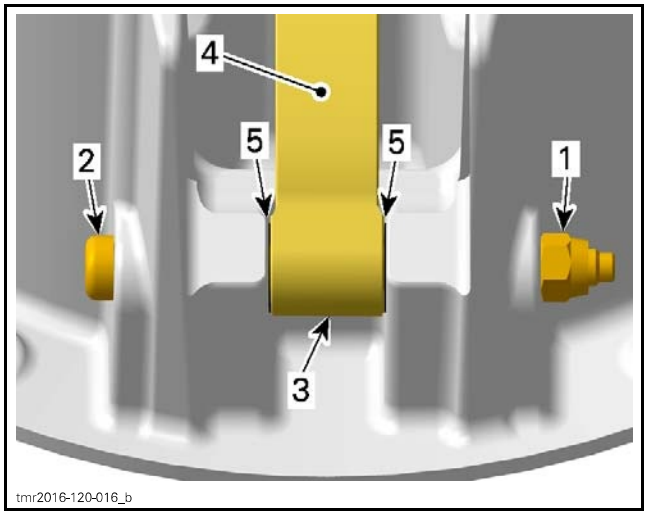

1. Lock nut
2. Centrifugal lever pivot bolt
3. Centrifugal lever
4. Contact surface to the roller
5. Thrust washers

⚠ WARNING

Whenever replacing centrifugal levers, always replace all lever at the same time. Otherwise, unbalanced drive pulley will occur because of levers difference.

Sliding Sheave and Spring Cover

Check sliding sheave for cracks and sliding contact surface for excessive wear. Replace sliding sheave if necessary.

Measure centrifugal lever pivot bolt bores. Replace sliding sheave if bores are out of specification or otherwise damaged.

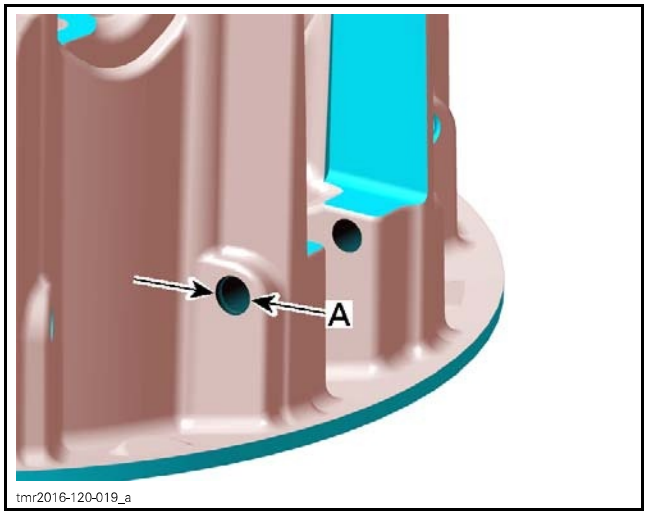

A. Centrifugal lever pivot bolt bore diameter

CENTRIFUGAL LEVER PIVOT BOLT BORE DIAMETER	
New	6.113 mm to 6.171 mm (.241 in to .243 in)
Service limit	6.300 mm (.248 in)

Measure bushing diameters of sliding sheave.

REQUIRED TOOL
Dial bore gauge

MEASURING POINT
At least 5 mm (1/4 in) from bushing edge

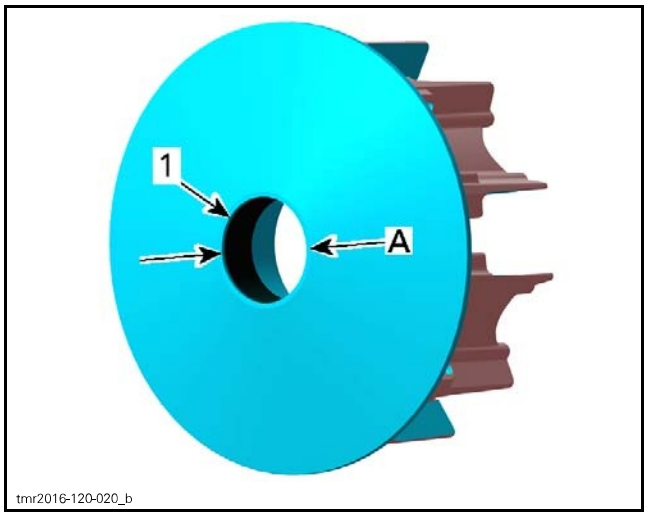

1. Bushing on fixed sheave side
A. Bore diameter of bushing

SLIDING SHEAVE LARGE BUSHING	
New	46.950 mm to 47.130 mm (1.848 in to 1.856 in)
Service limit	47.160 mm (1.857 in)

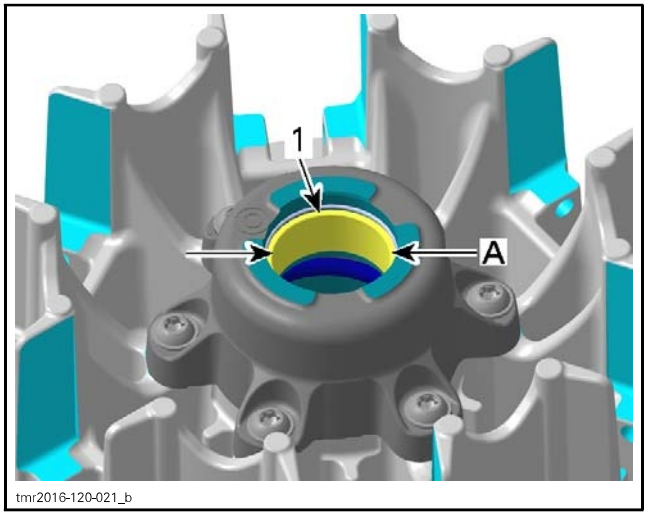

1. Bushing on governor cup side
A. Bore diameter of bushing

SLIDING SHEAVE SMALL BUSHING	
New	32.010 mm to 32.135 mm (1.26 in to 1.265 in)
Service limit	32.200 mm (1.268 in)

Replace sliding sheave if one of the bushings is out of specification. Visually inspect coatings.

Fixed Sheave

Check fixed sheave contact surface to the governor cup for scratches or other damages. If so, replace fixed sheave.

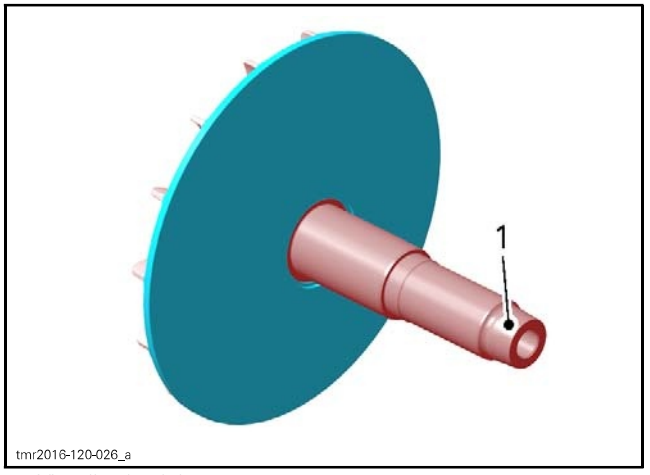

1. Visually check here

Check for any marks on fixed sheave plate. Replace if necessary.

Hub

Check:

- Oil seals in brittle, hard or damaged
- Needle bearing for excessive play and smooth operation.

Replace hub if necessary.

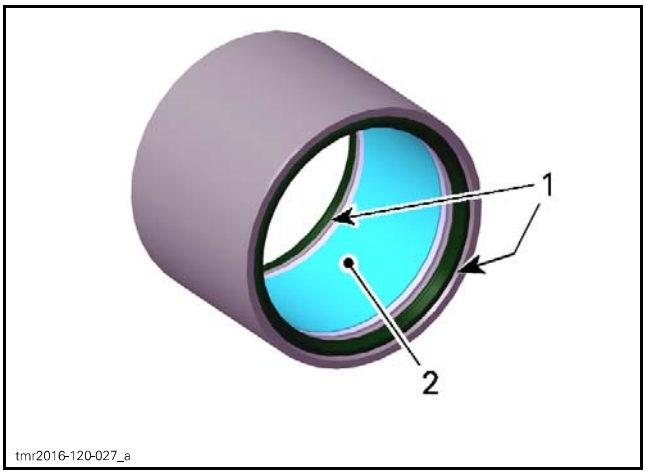

1. *Oil seals*
2. *Needle bearing*

Assembling the Drive Pulley

For assembly, reverse the disassembly procedure. Pay attention to following details.

Hub

Clean parts.

Lubricate needle bearing.

NOTICE Grease the needle bearing slightly. Do not apply in excess as it will spread out and lead to CVT malfunction.

NEEDLE BEARING LUBRICATION	
Service product	ISOFLEX GREASE TOPAS NB 52 (P/N 293 550 021)

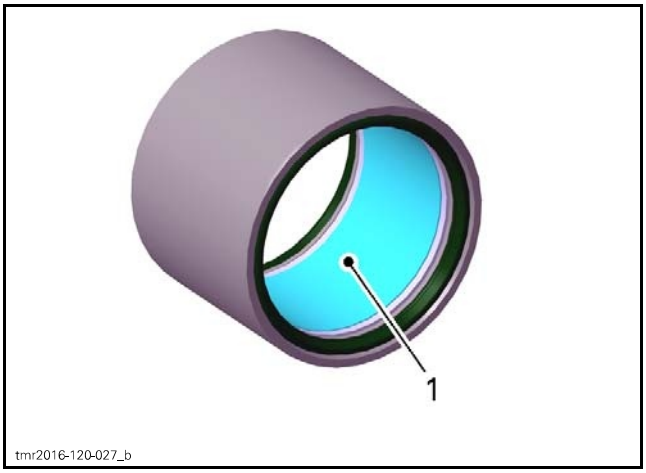

1. *Lubricate needle bearing*

Sliding Sheave

Install centrifugal levers with their thrust washers.

NOTICE Centrifugal levers must move easily after installation.

Governor Cup

Rebuild governor cup with new bearing sleeves, rollers and slider shoes.

NOTICE Final position has to be aligned with the contact surface of the slider shoes (no protrusion).

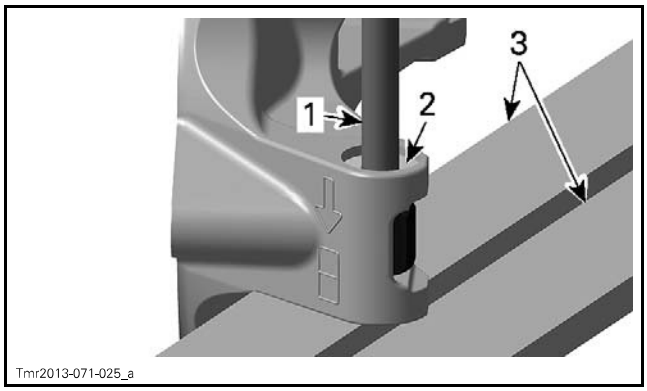

1. *Punch*
2. *Mating surface of slider shoes*
3. *Vice*

Each time when replacing the bearing sleeves sign the foreseen box with a punch.

NOTICE Do not tap too hard. Violent damage of the governor cup may appear.

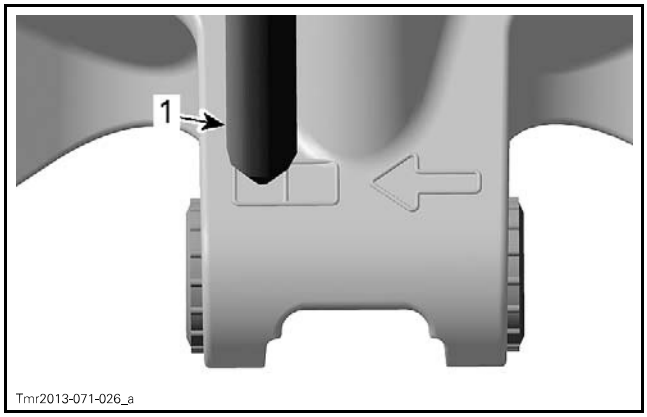

1. *Punch*

NOTICE Rollers must move easily after installation.

Insert slider shoes into governor cup to properly slide in guides.

Installing the Drive Pulley

For installation, reverse the removal procedure. Pay attention to the following details.

⚠ WARNING

Do not apply antiseize or any lubricant on crankshaft and drive pulley tapers.

NOTICE Never use any type of impact wrench at drive pulley removal and installation.

Clean mounting surfaces as described in *CLEANING* above.

Install drive pulley on crankshaft extension.

Install conical spring washer with its concave side towards drive pulley then install drive pulley screw.

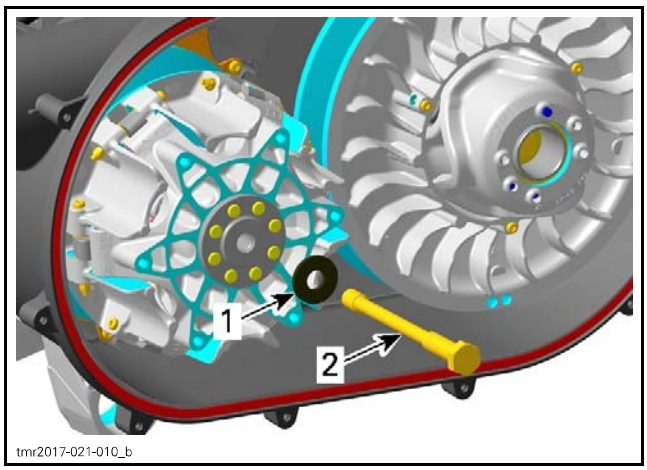

1. *Conical spring washer*
2. *Drive pulley screw*

⚠ WARNING

Never substitute conical spring washer and/or screw with jobber ones. Always use BRP genuine parts for this particular case.

Lock the drive pulley as per removal procedure.

Tighten drive pulley screw to specified torque.

NOTICE Never use any type of impact wrench for drive pulley installation.

TIGHTENING TORQUE	
Drive pulley screw	120 N•m ± 8 N•m (89 lbf•ft ± 6 lbf•ft)

DRIVEN PULLEY

Removing the Driven Pulley

REQUIRED TOOLS	
CLUTCH HOLDER (P/N 529 036 428)	
PULLER/LOCKING TOOL (P/N 529 000 088)	
DRIVEN PULLEY ADAPTER (P/N 708 200 720)	

1. Remove:
   - CVT cover
   - Drive belt.
2. Install the clutch holder.
3. Remove:
   - Driven pulley screw (discard it)
   - Collar washer.
4. Remove the clutch holder.
5. Pull the driven pulley out of the vehicle.
   - 5.1 If removed, reinstall the DRIVEN PULLEY ADAPTER (P/N 708 200 500).
   - 5.2 Screw in the DRIVEN PULLEY EXTRACTOR (P/N 529 036 352) in the **center hole** of the driven pulley adapter.
   - 5.3 Tighten the extractor until driven pulley is free.
   - 5.4 Remove tools from the driven pulley.

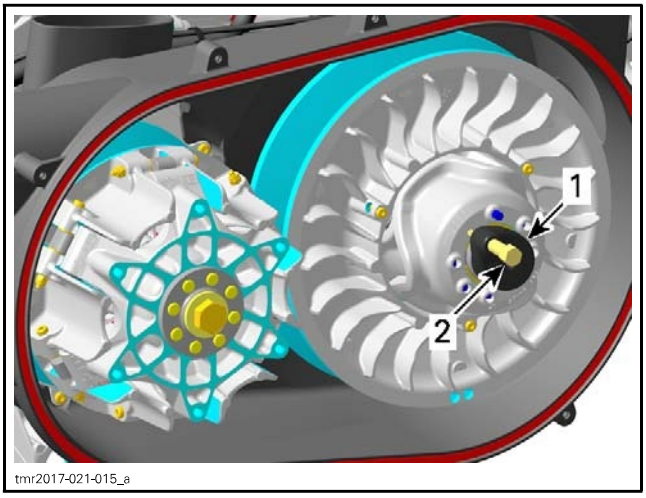

1. *Driven pulley adapter*
2. *Driven pulley extractor*

Disassembling the Driven Pulley

Removing the Cam and Spring

To remove the cam and the spring, always use the following tools.

⚠ WARNING

Cam is under high clutch spring preload. Never attempt to remove the cam without the recommended tools.

REQUIRED TOOLS	
PULLEY SPRING COMPRESSOR TOOL (P/N 529 036 012)	
DRIVEN PULLEY SPACER (P/N 529 036 351)	

1. Install the driven pulley on the spring compressor tool.
   1.1 Secure the spring compressor tool rod in a vice.
   1.2 Install the support cup, the driven pulley spacer, the driven pulley (with the cam towards the vice), the support guide and the handle.
   1.3 Screw in the handle to remove all play.

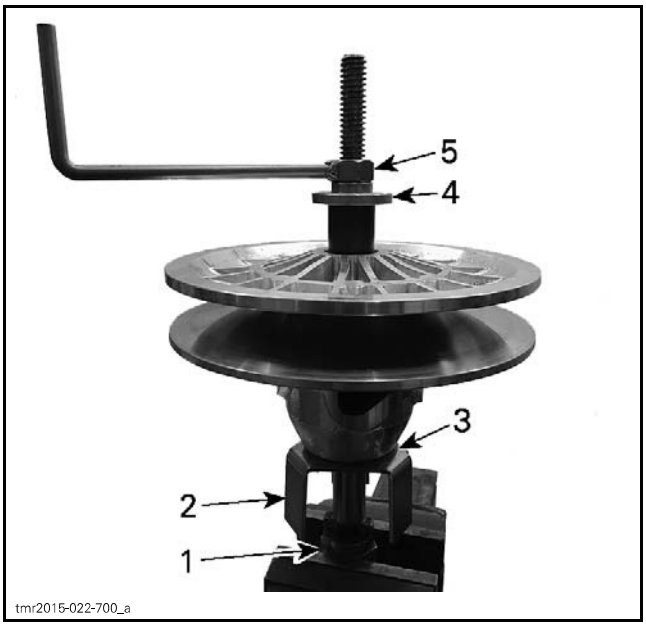

TYPICAL
1. *Pulley spring compressor tool*
2. *Support cup*
3. *Driven pulley spacer*
4. *Support guide*
5. *Handle*

2. Remove and discard the three (3) Torx cam retaining screws.



TYPICAL - PULLEY SPRING COMPRESSOR TOOL IS STILL INSTALLED

3. Remove the driven pulley assembly from the spring compressor tool.
4. Separate parts.

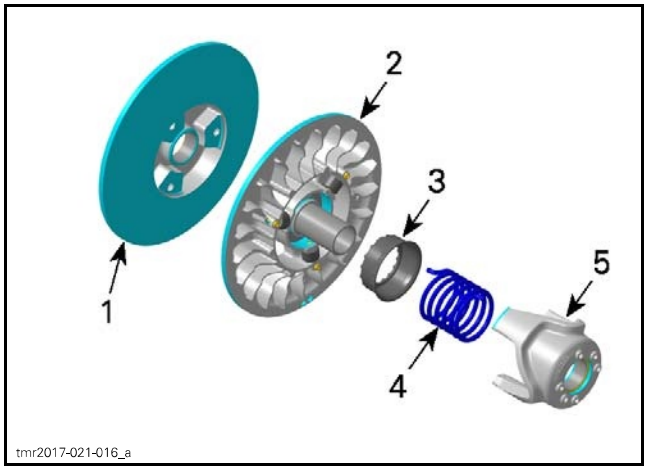

1. *Fixed sheave*
2. *Sliding sheave*
3. *Spring support*
4. *Spring*
5. *Cam*

Removing the Driven Pulley Roller

1. Remove screw locking the bearing pin.

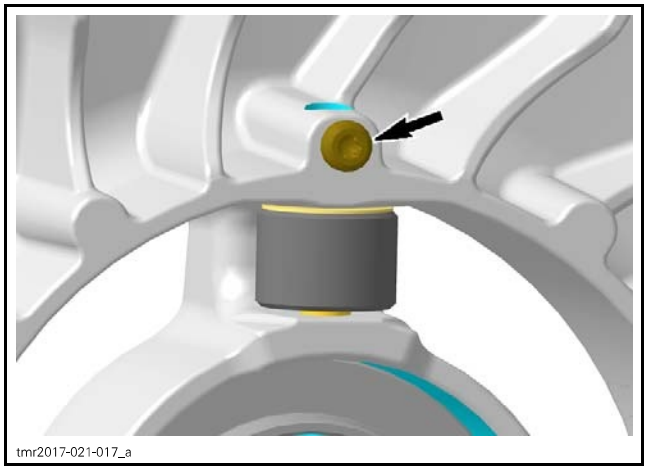
tmr2017-021-017_a

2. Remove bearing pin.

REQUIRED TOOL
SNAP-ON SCREW (P/N CJ93-1)
SNAP-ON HAMMER (P/N CJ125-6)
Extractor adapter M4

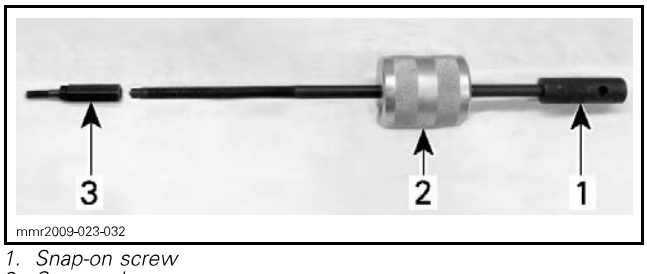

mmr2009-023-032

1. *Snap-on screw*
2. *Snap-on hammer*
3. *Extractor adapter M4*

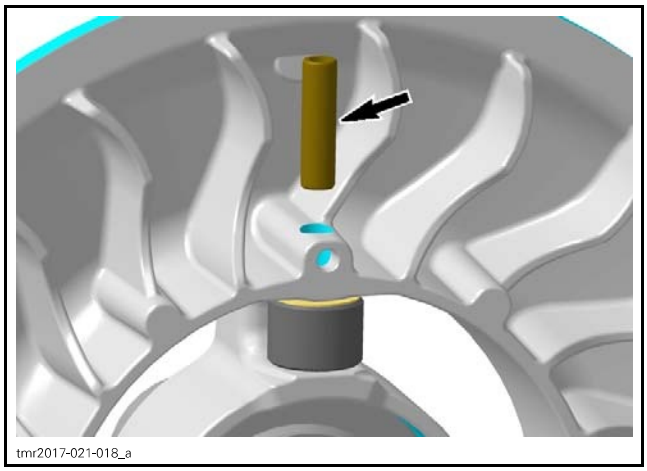
tmr2017-021-018_a

3. Remove:
   - Thrust washer
   - Roller.

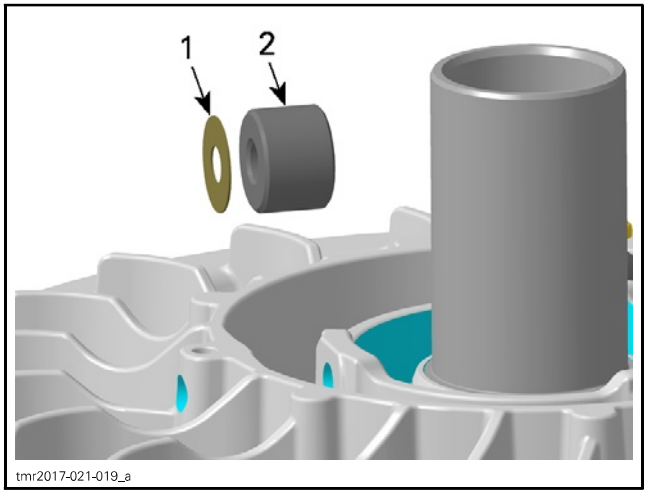

tmr2017-021-019_a

1. *Thrust washer*
2. *Roller*

4. Proceed with removal of other roller.

Inspecting the Driven Pulley

Cam

1. Verify all contact surfaces of cam for visible damages.

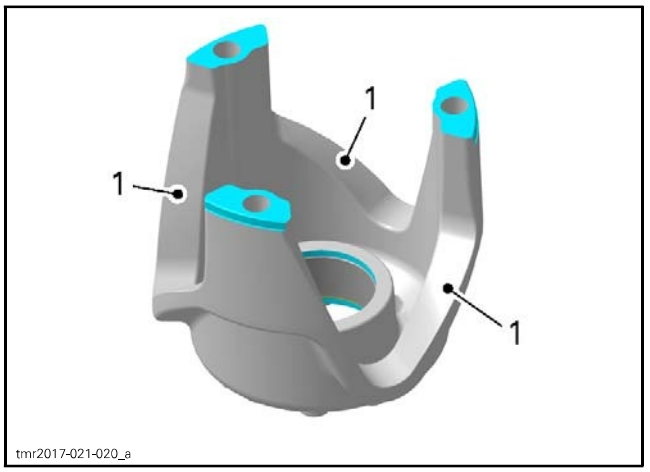

tmr2017-021-020_a

1. *Contact surfaces*

2. Ensure circlip properly locks the inner bushing. Replace part if necessary.

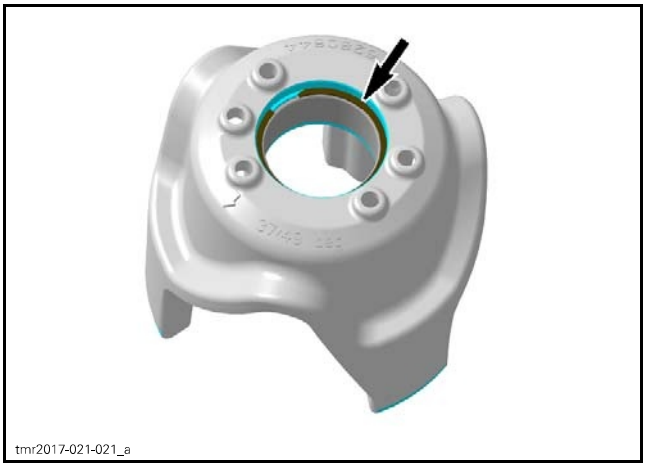
tmr2017-021-021_a

3. Measure the inner diameter of cam bushing.

REQUIRED TOOL
Dial bore gauge

MEASURING POINT
At least 5 mm (1/4 in) from bushing edge

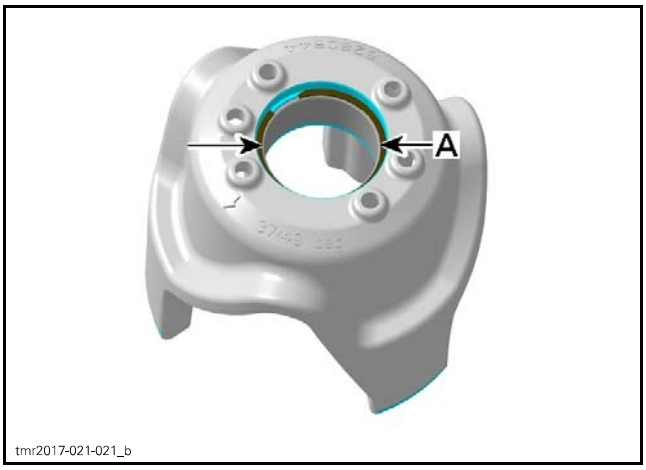

tmr2017-021-021_b

A. Inner diameter of cam bushing

CAM BUSHING INNER DIAMETER	
New	41.278 mm to 41.363 mm (1.625 in to 1.628 in)
Service limit	41.420 mm (1.631 in)

Replace the cam if the inner diameter of bushing is out of specification.

Sliding Sheave

1. Inspect pulley sheave for marks or scratches.
2. Ensure circlip properly locks the inner bushing. Replace part if necessary.
3. Measure the inner diameter of sliding sheave bushing.

REQUIRED TOOL
Dial bore gauge

MEASURING POINT
At least 5 mm (1/4 in) from bushing edge

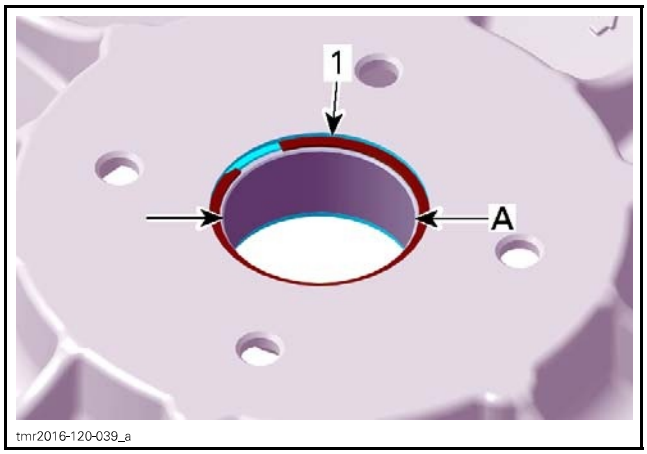

tmr2016-120-039_a

1. Circlip

A. Inner diameter of sliding sheave bushing

DRIVEN PULLEY INNER HALF BUSHING	
New	41.278 mm to 41.363 mm (1.625 in to 1.628 in)
Service limit	41.420 mm (1.631 in)

Replace the sliding sheave if the inner diameter of bushing is out of specification.

Fixed Sheave

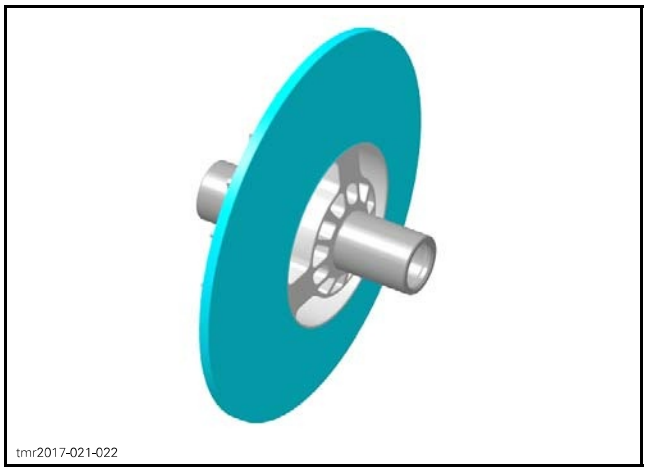
tmr2017-021-022

Replace fixed sheave and countershaft if one of the following problem is detected:

– Marks or scratches on pulley sheave
– Bent, twisted or otherwise damaged countershaft
– Defective splines and threads at the end of countershaft.

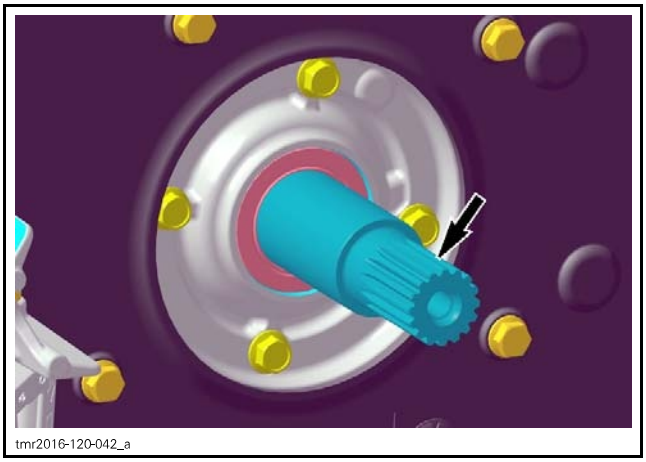
tmr2016-120-042_a

Driven Pulley Roller

1. Check the rollers for flat spots, cracks or other visible damages. Replace if necessary (as a set).
2. Measure inner and outer diameter of rollers.

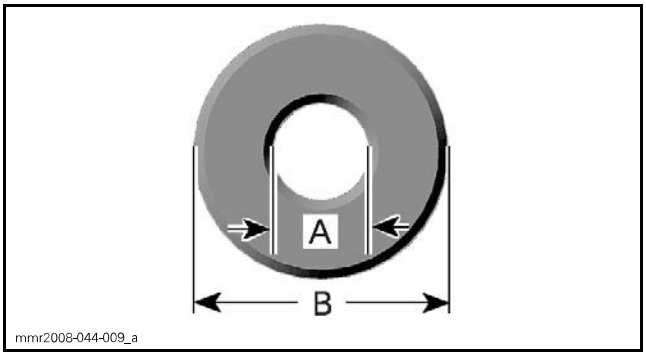

mmr2008-044-009_a

A. Inner diameter
B. Outer diameter

DRIVEN PULLEY ROLLER	SERVICE LIMIT
Inner diameter	8.5 mm (.335 in)
Outer diameter	21.5 mm (.846 in)

3. Measure the roller thickness.

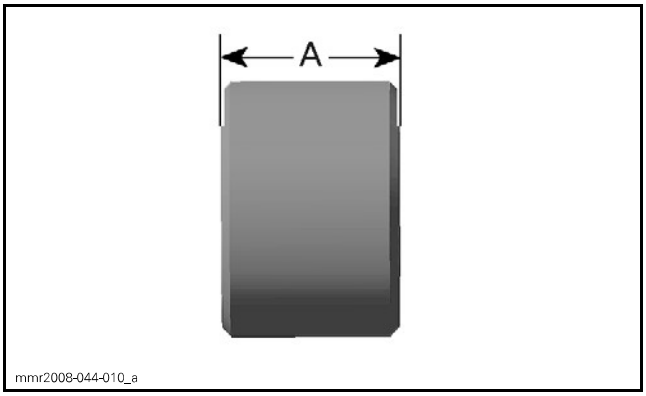

mmr2008-044-010_a

A. Thickness of roller

DRIVEN PULLEY ROLLER	SERVICE LIMIT
Thickness	14.75 mm (.581 in)

If a roller is out of specifications, replace all rollers at the same time.

Cleaning the Driven Pulley

Use the PULLEY FLANGE CLEANER (P/N 413 711 809) and a clean rag to clean pulley sheaves.

Cam and Spring

During break-in period, teflon from bushing moves to cam or countershaft surface. A teflon over teflon running condition occurs, leading to low friction. So it is normal to see gray teflon deposit on cam or countershaft. Do not remove this deposit.

When a dust deposit has to be removed from the cam or the countershaft, use dry cloth to avoid removing transferred teflon.

Assembling the Driven Pulley

Installing the Driven Pulley Roller

1. Using a hand wire brush, clean locking screw threads.
2. Insert:
   – Roller
   – Thrust washer.
3. Install spring pin.

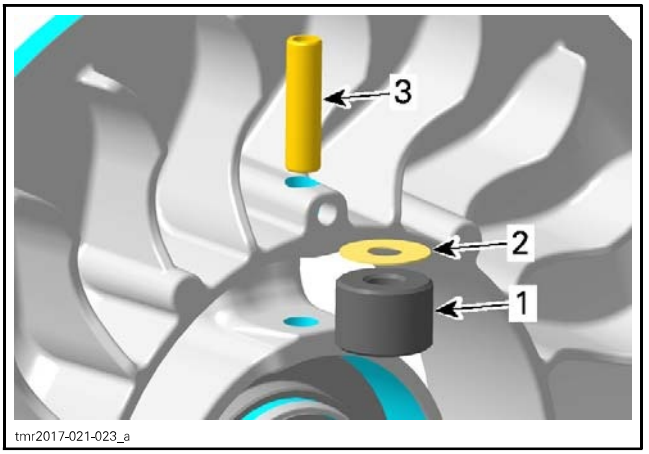

tmr2017-021-023_a

1. Roller
2. Thrust washer
3. Spring pin

4. Tighten locking screw as specified.

TIGHTENING TORQUE	
Locking screws	3.5 N•m ± 0.4 N•m (31 lbf•**in** ± 4 lbf•**in**)

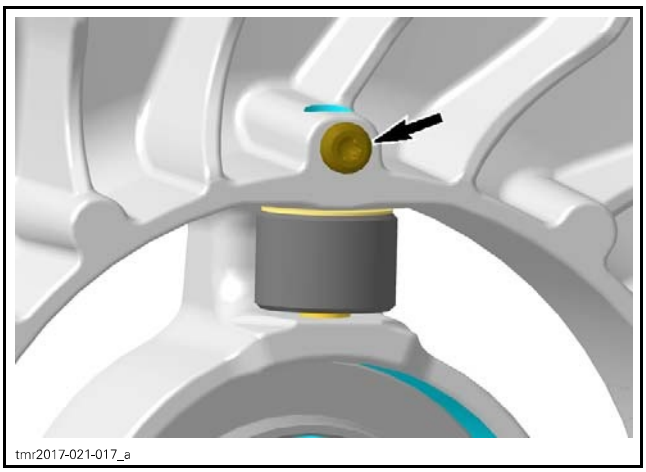

5. Install spring pin and tighten as specified.

Assembling the Sheaves and Cam

1. Install the cam on the spring compressor tool, over the support cup and the clutch shim.
2. Install the spring into the cam then the fixed sheave and the sliding sheave.
3. Complete with the support guide and the handle.
4. Before tightening the handle, align the arrows on cam and the sliding sheave with the one on the fixed sheave.
5. Tighten the handle until the cam is completely pressed against the sliding sheave.

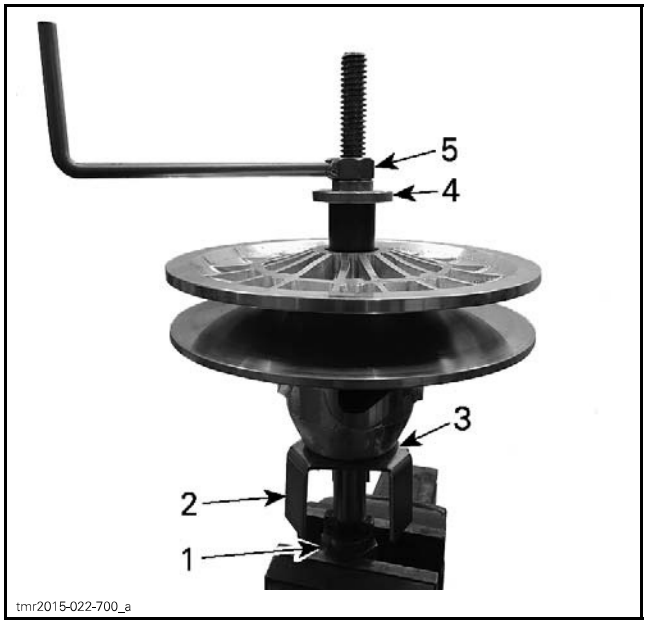

1. Pulley spring compressor tool
2. Support cup
3. Driven pulley spacer
4. Support guide
5. Handle

6. From the back of the sliding sheave, install three (3) **NEW** cam screws.

TIGHTENING TORQUE	
Cam screw	61 N•m ± 6 N•m (45 lbf•ft ± 4 lbf•ft)

7. Remove the driven pulley from the tool.

Installing the Driven Pulley

For installation, reverse the removal procedure. Pay attention to the following details.

NOTICE **This assembly uses a stretch screw. Always install a NEW screw.**

Clean threads of gearbox countershaft and **NEW** driven pulley screw.

SERVICE PRODUCT	
Gearbox countershaft threads and driven pulley screw	XPS BRAKES AND PARTS CLEANER (P/N 219 701 776) or XPS BRAKES AND PARTS CLEANER (USA) (P/N 219 701 705)

NOTICE **Threads must be free of oil and grease. Lubricants in threads will create too high preload to tightened driven pulley screw.**

Install the driven pulley onto the countershaft. Make sure to align splines.

Install driven pulley screw with collar washer.

NOTICE Make sure to position the large diameter of the thrust washer against the conical side of the spring washer.

Install the clutch holder.

REQUIRED TOOL	
CLUTCH HOLDER (P/N 529 036 428)	

Tighten driven pulley screw as specified.

TIGHTENING TORQUE	
Driven pulley screw	70 N•m ± 5 N•m (52 lbf•ft ± 4 lbf•ft)

Remove the clutch holder.

Install drive belt. Refer to *DRIVE BELT* in this subsection.

NOTICE After the repair procedure is finished, allow vehicle to sit for 6 hours for threadlocker curing.

CVT AIR GUIDE

Removing the CVT Air Guide

Remove:

– *DRIVE PULLEY*

– *DRIVEN PULLEY*.

Unscrew the clamps retaining the CVT air hoses.

Remove CVT air guide.

Remove and discard O-rings.

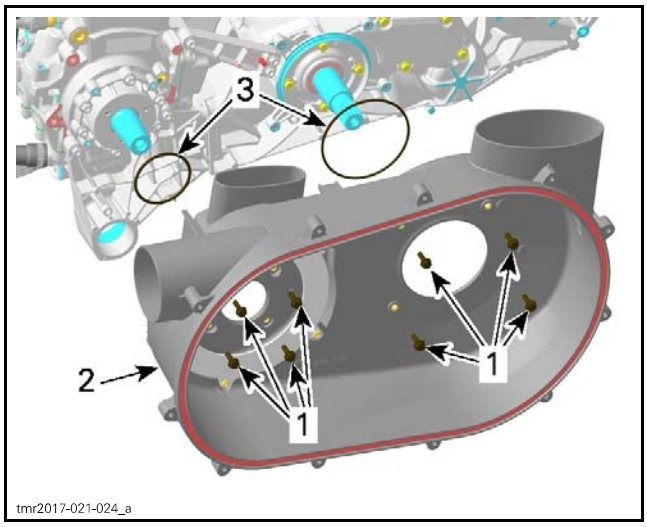

1. *Retaining screws*
2. *CVT air guide*
3. *O-rings*

Inspecting the CVT Air Guide

Clean CVT air guide from contamination

Installing the CVT Air Guide

For installation reverse the removal procedure.

Install **NEW** O-rings.

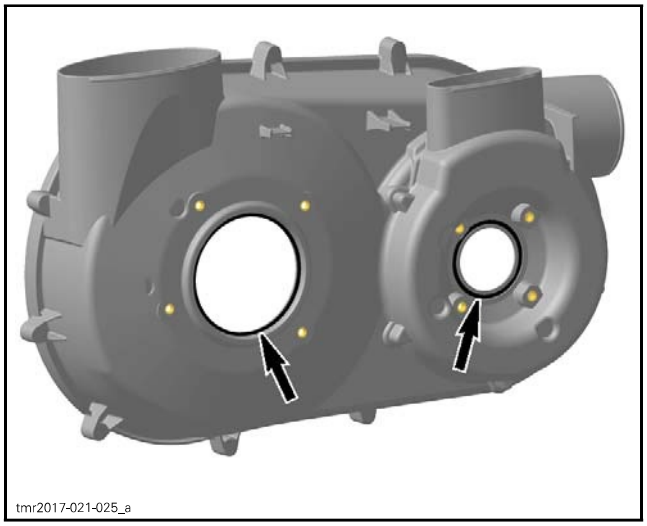

TIGHTENING TORQUE	
Service product	LOCTITE 243 (BLUE) (P/N 293 800 060)
CVT air guide retaining screws	10 N•m ± 1 N•m (89 lbf•**in** ± 9 lbf•**in**)

GEARBOX AND 4X4 COUPLING UNIT

SERVICE TOOLS

Description	Part Number	Page
ECM ADAPTER TOOL	529 036 166	8
FLUKE 115 MULTIMETER	529 035 868	6, 10
HANDLE	420 877 650	12
M34 SOCKET	529 036 388	20, 25
OIL SEAL GUIDE	529 036 433	13, 23, 36
OIL SEAL INSTALLER (COUNTERSHAFT)	529 036 391	12
OIL SEAL INSTALLER (DIFFERENTIAL OUTPUT)	529 036 390	13
OIL SEAL INSTALLER (GEARBOX)	529 035 758	12
PUNCH	529 036 425	18
SPLINES SOCKET 1/2"	529 036 389	20, 25

SERVICE TOOLS – OTHER SUPPLIER

Description	Part Number	Page
BACK PROBE TEST WIRES	529 036 063	6, 8

SERVICE PRODUCTS

Description	Part Number	Page
COPASLIP	420 297 430	31
LOCTITE 243 (BLUE)	293 800 060	14, 16, 19, 23, 33–34, 36
LOCTITE 5910	293 800 081	10, 23, 25
LOCTITE 648 (GREEN)	413 711 400	24–25, 34
LOCTITE CHISEL (GASKET REMOVER)	413 708 500	23
PETAMO GREASE GHY 133N	420 899 271	12
SUPER LUBE GREASE	293 550 030	7, 10

If you bought this manual from any other seller please leave them NEGATIVE feedback and notify me at bestshopmanuals@gmail.com

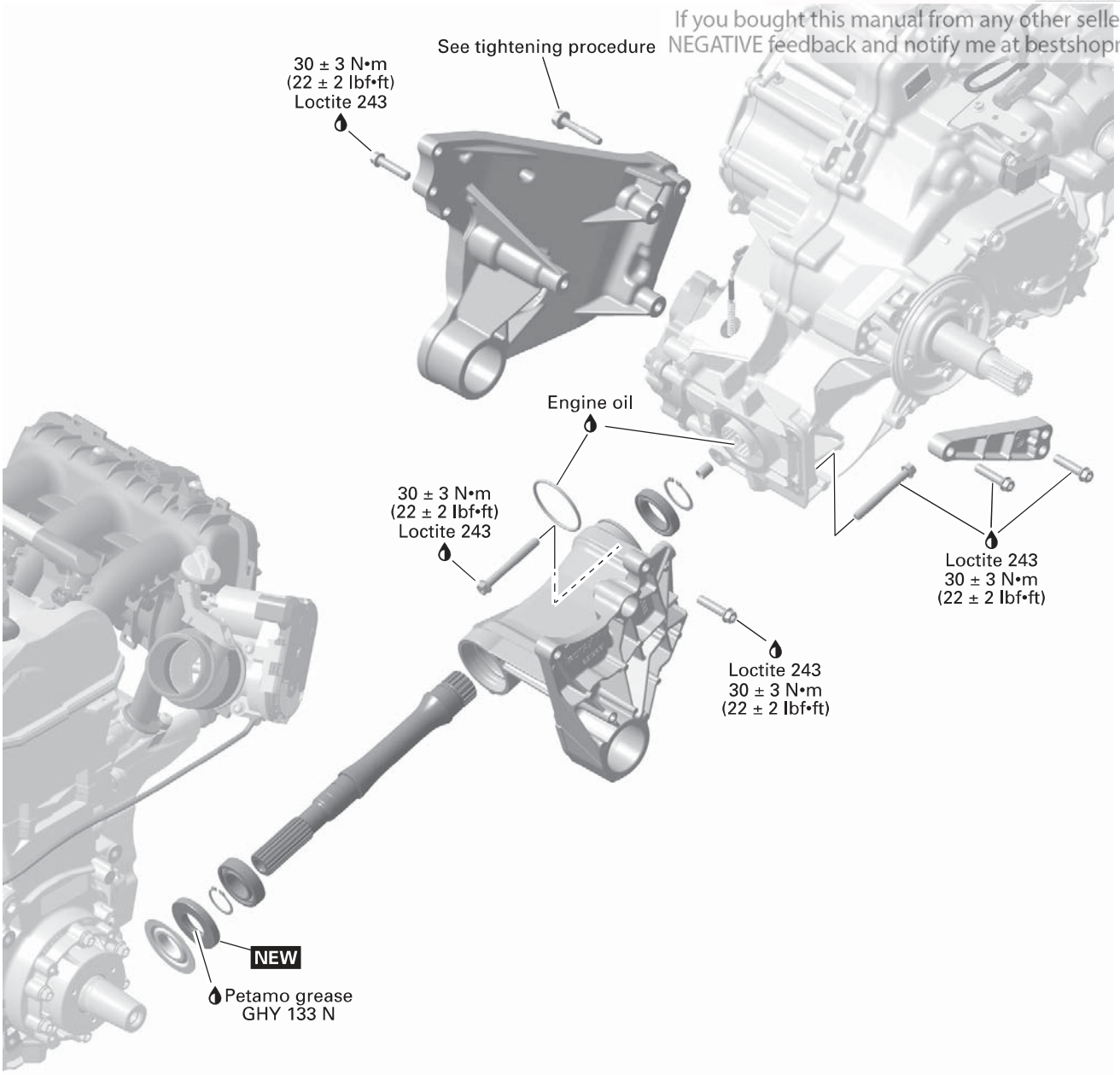

NEW = Component must be replaced when removed.

tmr2017-022-001_a

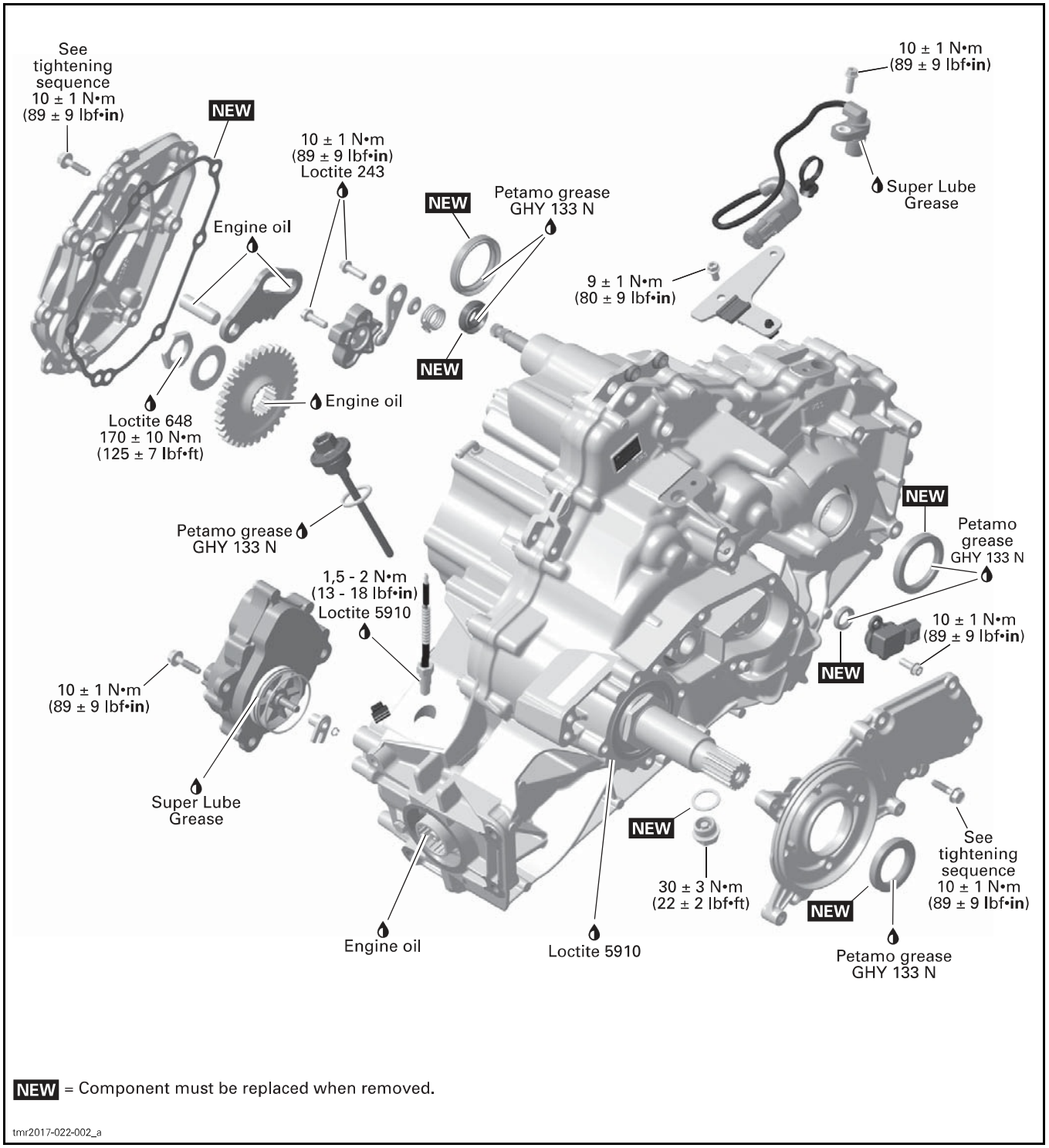

NEW = Component must be replaced when removed.

tmr2017-022-002_a

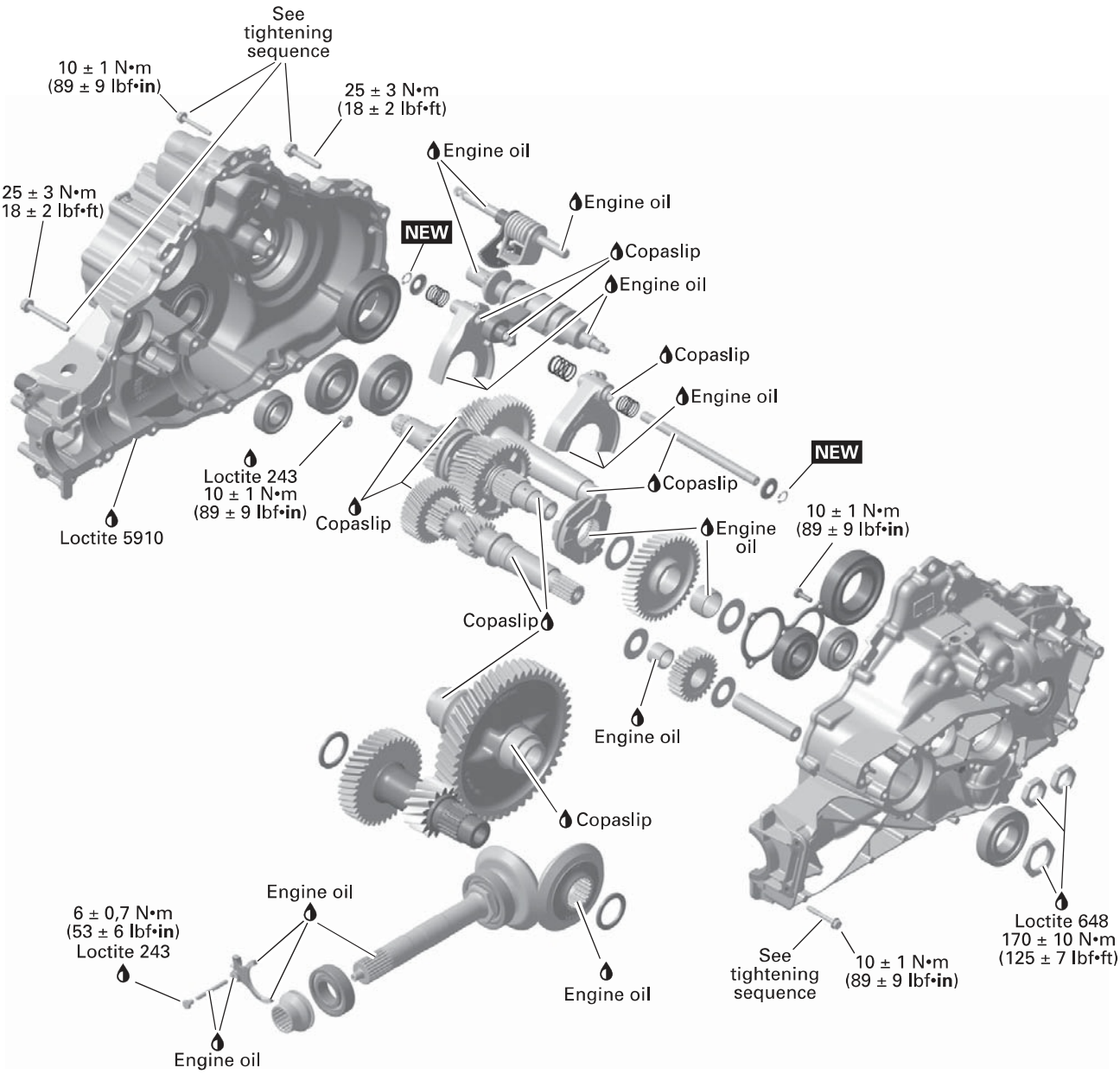

NEW = Component must be replaced when removed.

tmr2016-121-099_b

GENERAL

GEARBOX OVERVIEW

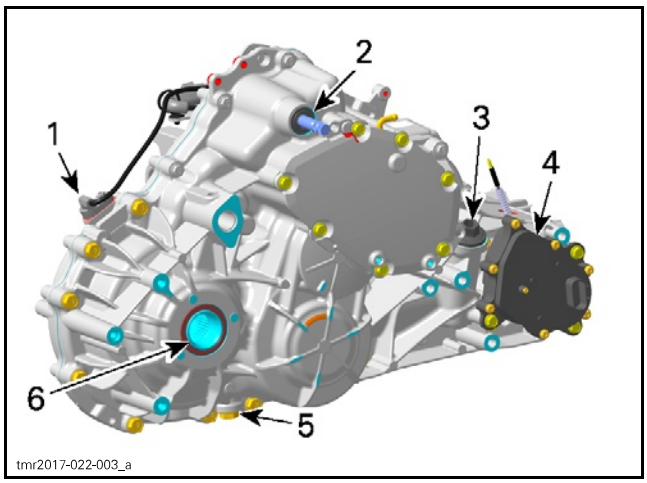

1. *Vehicle speed sensor (VSS)*
2. *Shift shaft*
3. *Gearbox oil dipstick*
4. *4WD actuator*
5. *Magnetic drain plug*
6. *Drive gear*

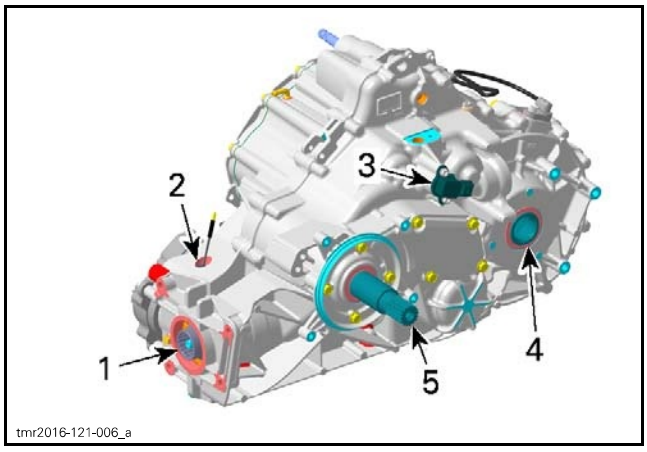

1. *4WD coupling sleeve*
2. *4WD indicator switch*
3. *Gearbox position sensor (GBPS)*
4. *Drive gear*
5. *Countershaft*

TROUBLESHOOTING

UNUSUAL GEARBOX NOISE AND/OR VIBRATIONS

1. Low oil level in gearbox.
   - *Oil leakage from gearbox. Replace damaged gasket(s) and/or oil seal(s).*
2. Defective bearings.
   - *Bearing(s) do(es) not turn smoothly. Replace bearing(s).*
3. Damaged or worn gears.
   - *Inspect gears for damages or missing teeth. Replace respective gears.*

GEAR INDICATION FAILS

1. Defective gearbox position sensor (GBPS).
   - *Perform a gearbox position sensor test.*
   - *Damaged wires. Repair as required.*

GEAR(S) IS (ARE) HARD TO SHIFT

1. Incorrect shifter cable adjustment.
   - *Adjust shifter cable (refer to SHIFTER CABLE in SHIFTER subsection.*

4 WHEEL DRIVE INDICATION FAILS

1. 4WD indicator switch failure.
   - *Test 4WD indicator switch. Replace as required.*
   - *Bad contact. Check for corrosion or loose connector.*
   - *Damaged wires. Repair as required.*

4 WHEEL DRIVE DOES NOT ENGAGE OR DISENGAGE

1. Defective 4WD switch.
   - *Check 4WD switch operation.*
2. Defective 4WD actuator.
   - *Test 4WD actuator.*
3. Damaged or worn shifting fork or sleeve.
   - *Remove 4WD actuator and inspect shifting fork and sleeve.*

PROCEDURES

VEHICLE SPEED SENSOR (VSS)

VSS Location

The vehicle speed sensor is located on the rear top side of the left gearbox housing.

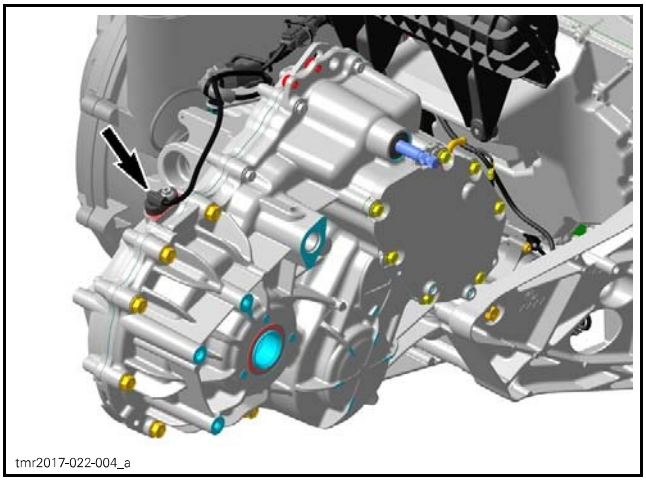

VEHICLE SPEED SENSOR (VSS)

VSS Wire Identification

FUNCTION	PIN	COLOR SENSOR CONNECTOR
12-volt input from fuse F5	A	RED
Speed signal (to ECM-A E1)	B	WHITE
Ground (to ECM-A D4)	C	BLACK

VSS Circuit Protection

CONDITION	CIRCUIT PROTECTION
Supplied with main relay activated	Fuse 5 of fuse block 2 (from main relay R2)

Testing the VSS Input Voltage

1. Turn ignition switch ON.
2. Back-probe the VSS connector and measure voltage.

REQUIRED TOOLS	
BACK PROBE TEST WIRES (P/N 529 036 063)	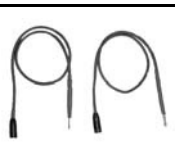
FLUKE 115 MULTIMETER (P/N 529 035 868)	

VSS INPUT VOLTAGE TEST		
TEST PROBES		RESULT (KEY ON)
PIN A (RED wire)	PIN C (BLACK wire)	Battery voltage

If voltage is not as specified, test positive and ground separately.

Testing the VSS Signal

1. Lift rear of vehicle so that rear wheels are off the ground.
2. Set transmission to 2WD and to Neutral.
3. Turn ignition switch ON.
4. Back-probe the VSS connector and measure voltage while slowly rotating rear wheels by hand.

REQUIRED TOOLS	
BACK PROBE TEST WIRES (P/N 529 036 063)	
FLUKE 115 MULTIMETER (P/N 529 035 868)	

VSS SIGNAL TEST		
TEST PROBES		RESULT (WHILE ROTATING WHEELS)
PIN B (WHITE wire)	PIN C (BLACK wire)	Alternate reading between battery voltage and 0 Vdc

NOTE: Since we measure pulsating voltage, the numeric display will continuously change. The analog display may be easier to follow.

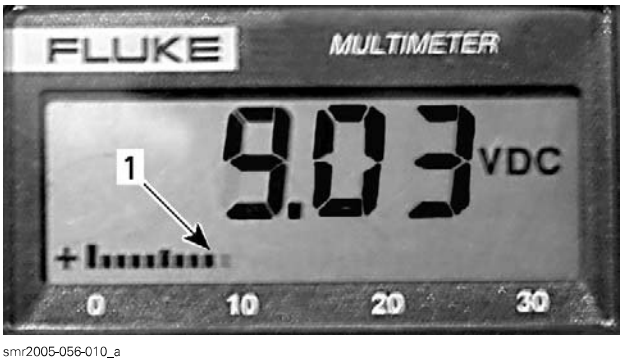

1. Analog display

Removing the VSS

Disconnect VSS connector.

Remove:

– Retaining screw
– VSS.

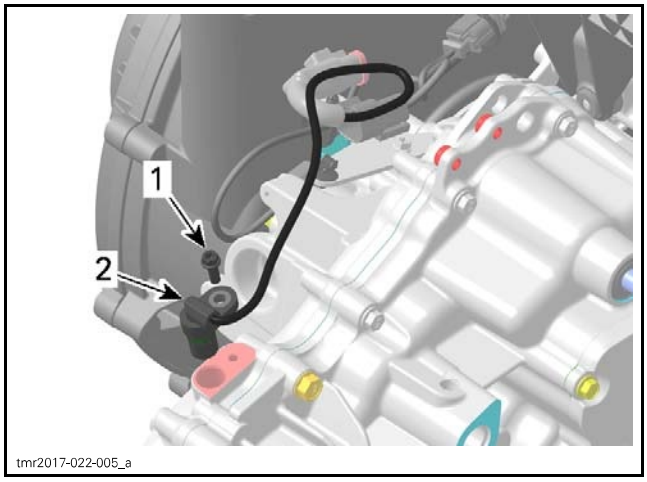

SEVERAL PARTS REMOVED FOR CLARITY
1. *Screw*
2. *VSS*

Installing the VSS

For installation, reverse the removal procedure. Pay attention to the following.

Lubricate VSS O-ring.

VSS O-RING	
Service product	SUPER LUBE GREASE (P/N 293 550 030)

Tighten retaining screw to specification.

TIGHTENING TORQUE	
VSS retaining screw	10 N•m ± 1 N•m (89 lbf•**in** ± 9 lbf•**in**)

GEARBOX POSITION SENSOR (GBPS)

GBPS Location

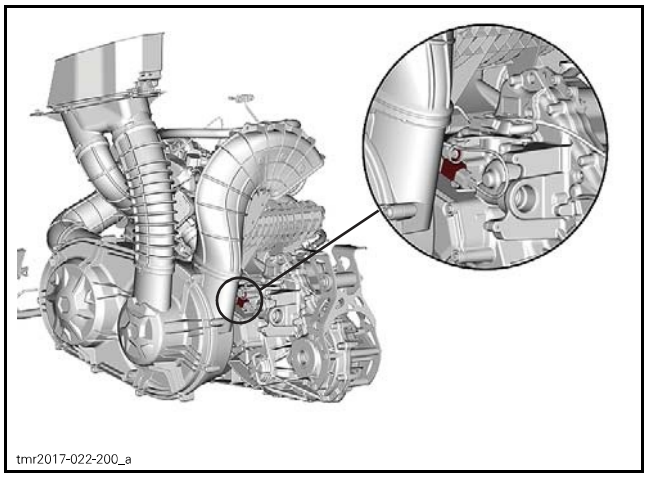

GBPS Reset

When replacing the gearbox position sensor (GBPS), it is required to reset (re-zero) its values for proper operation.

A reset must be carried out each time any of the following parts has been replaced:
- Gearbox assembly
- Shift drum
- GBPS
- ECM.

1. Connect vehicle to the latest applicable version of the BRP diagnostic software, refer to *COMMUNICATION TOOLS AND B.U.D.S.* subsection.
2. In the software, select the following:
   - **Setting** page
   - **ECM** button
   - **Initialization** tab.
3. Set shift lever in NEUTRAL position.
4. In the **Reset Gear Position Sensor** field.

A message will be displayed if the operation is successful.

If an error occurred or the GBPS is not within the allowed range while resetting, the ECM will generate a fault code and will not accept the setting.

5. If a fault message is displayed, follow the instructions in the message(s).
6. Check for fault codes.

If a fault code is generated:
- Carry out the service action.
- Reset the fault code.
- Repeat the reset procedure.

7. Close and disconnect the BRP diagnostic software.

NOTE: Do not turn ignition key OFF.

8. Verify gears engagement.
   - 8.1 With the vehicle on ground and in NEUTRAL position, start engine.
   - 8.2 During 4-5 seconds, rev engine to 2500 ± 200 RPM.
   - 8.3 Let engine returns to idle.
   - 8.4 Select an other position (P, R, H or L). Repeat substeps 8.2 and 8.3 until all position are verified.

   NOTE: The vehicle must be in movement to complete the procedure on R, H and L position.

Testing the GBPS Input Voltage

NOTE: Prior to conduct testing, check fault codes in B.U.D.S.

Set shift lever in NEUTRAL position.

Back-probe the GBPS connector.

REQUIRED TOOL	
BACK PROBE TEST WIRES (P/N 529 036 063)	

Test as follow:

MULTIMETER PROBE POSITIONS	VOLTAGE
PIN 2 and PIN 3 of the GBPS connector 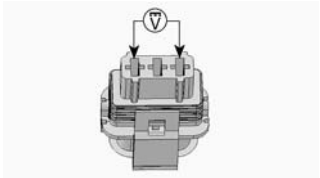	5 volts

If voltage is adequate, check GBPS signal wire.

If there is no voltage, check each GBPS input as follows.

MULTIMETER PROBE POSITIONS	VOLTAGE
GBPS connector (pin 3) and battery ground 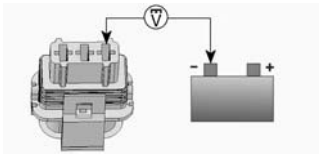	5 volts
GBPS connector (pin 2) and battery + terminal 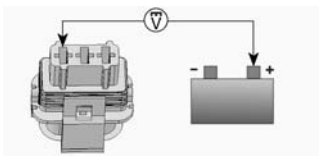	Battery voltage

If there is no voltage, check wires and connector pins. Replace or repair defective parts and reset fault codes.

Testing the GBPS Communication Link Continuity

Unplug connector "A" from ECM and connect it to the ECM adapter tool.

REQUIRED TOOL	
#ECM ADAPTER TOOL (P/N 529 036 166)	

MULTIMETER PROBE POSITIONS	RESISTANCE @ 20°C (68°F)
GBPS connector (pin 1) and ECM adapter tool (pin F4) 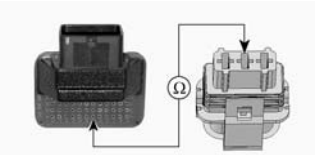	Below 1 Ω

If resistance is out of specification, check wires and connectors. Repair and reset fault codes.

If resistance is good and the other tests succeeded, replace the GBPS and reset fault codes.

NOTE: The GBPS must be reset.

Removing the GBPS

Set shift lever in NEUTRAL position.

Unplug GBPS connector.

Remove screws and withdraw GBPS.

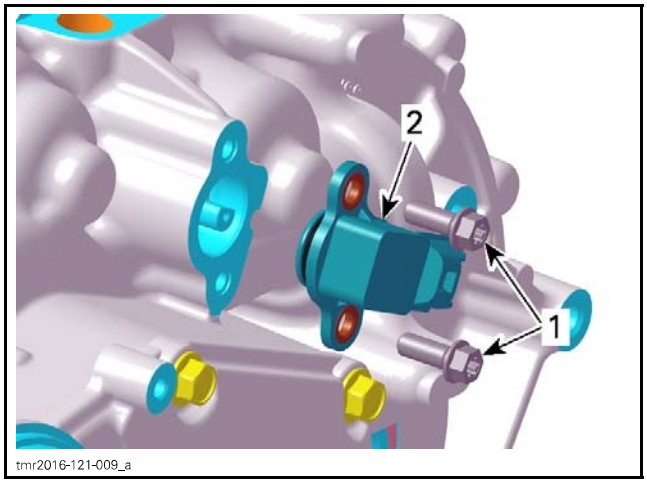

1. Screws
2. Gearbox Position Sensor (GBPS)

Installing the GBPS

For installation, reverse the removal procedure. Pay attention to the following details.

Shift lever must be in the NEUTRAL position.

Align GBPS with the flat on the shift drum shaft.

NOTE: Do not force to install GBPS if shaft flat is not properly aligned. If alignment is incorrect, check shift rod adjustment.

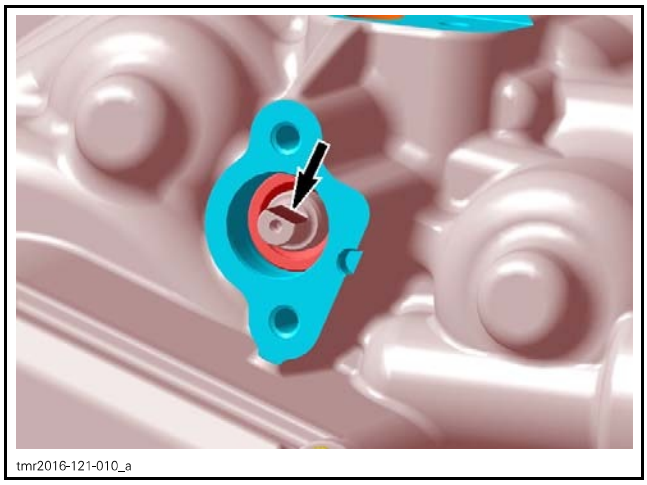
tmr2016-121-010_a

Reset the GBPS. Refer to *GBPS RESET* in this subsection.

4WD INDICATOR SWITCH

4WD Indicator Switch Location

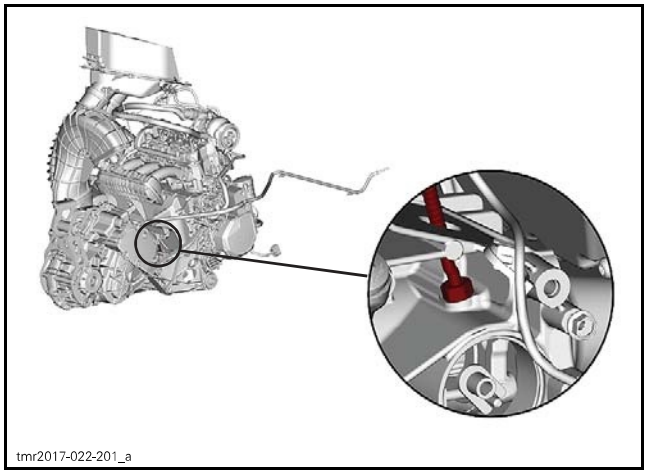
tmr2017-022-201_a

Testing the 4WD Indicator Switch

Disconnect 4WD indicator switch connector.

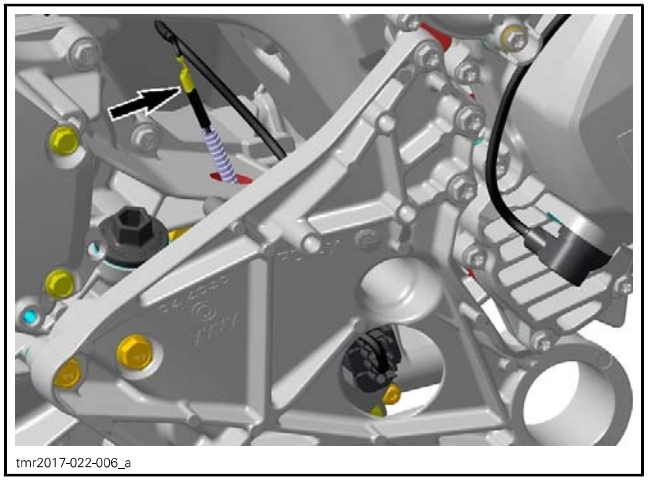
tmr2017-022-006_a

ENGINE MAG SIDE

Measure switch resistance as follows.

SWITCH POSITION	SWITCH WIRE		RESISTANCE
2WD	BLACK/ BEIGE	Engine ground	Infinite (OL)

If the resistance is out of specification, replace the 4WD indicator switch.

Removing the 4WD Indicator Switch

Disconnect 4WD indicator switch connector and unscrew 4WD indicator switch.

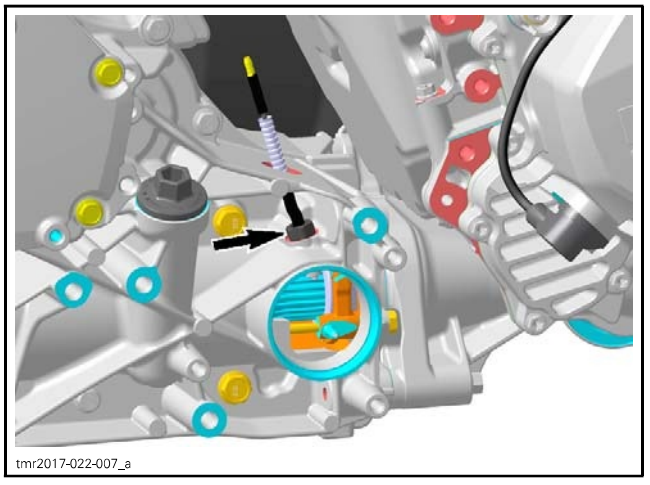
tmr2017-022-007_a

Installing the 4WD Indicator Switch

For installation, reverse the removal procedure. Pay attention to the following details.

Take care do not damage indicator switch threads during installation.

Apply carefully some sealant on threads of indicator switch.

NOTICE Do not apply Loctite 5910 on switch plunger, as it will lead to switch malfunction.

TIGHTENING TORQUE	
Service product	LOCTITE 5910 (P/N 293 800 081)
4WD indicator switch	1.5 N•m to 2 N•m (13 lbf•**in** to 18 lbf•**in**)

4WD ACTUATOR

4WD Actuator Location

Testing the 4WD Actuator

Check if the 2WD/4WD selector works properly.

Unplug 4WD actuator connector.

Turn ignition key ON.

Measure voltage as follows.

REQUIRED TOOL	
FLUKE 115 MULTIMETER (P/N 529 035 868)	

SWITCH POSITION	SWITCH WIRE		VOLTAGE
2WD	WHITE	WHITE/BLUE	Battery voltage
4WD			

If the selector is out of specifications, check wires, connectors and replace the selector if necessary.

If the selector is good, check the vehicle harness.

If the vehicle harness is good, replace the 4WD actuator.

Removing the 4WD Actuator

Before beginning any servicing on the 4WD actuator, make sure the vehicle is in 4WD position.

Remove engine bracket (MAG side).

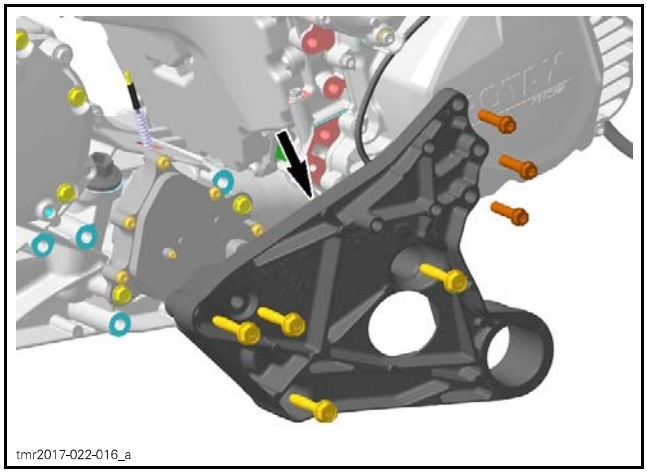

Place a drain pan under 4WD actuator.

Remove the 4WD actuator.

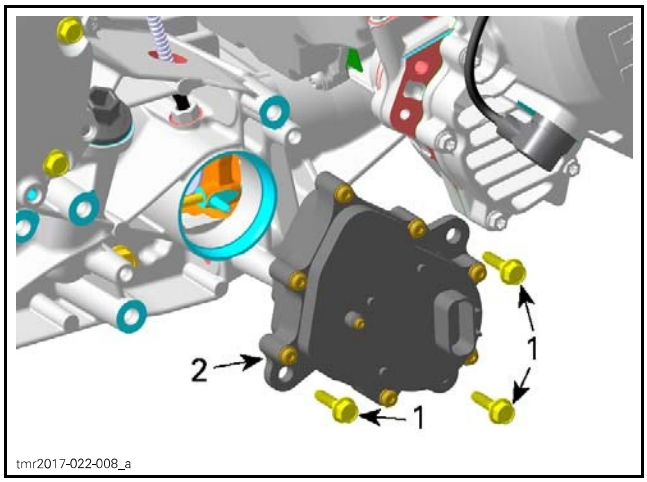

1. Screws
2. 4WD actuator

Installing the 4WD Actuator

Lubricate 4WD actuator O-ring.

4WD ACTUATOR O-RING	
Service product	SUPER LUBE GREASE (P/N 293 550 030)

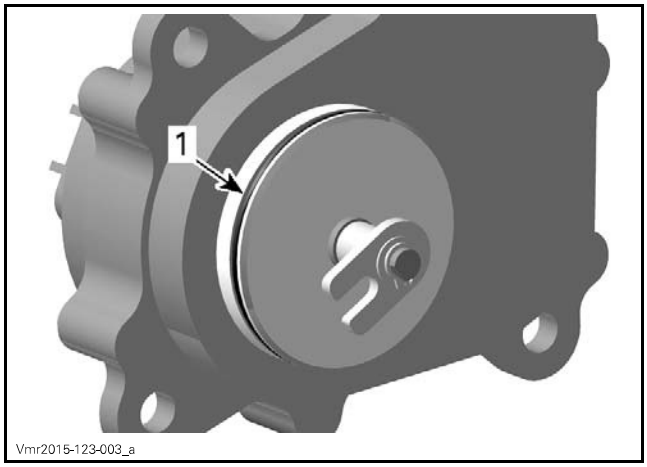

1. 4WD actuator O-ring

Ensure coupling fork is in 4WD position (toward the front of vehicle).

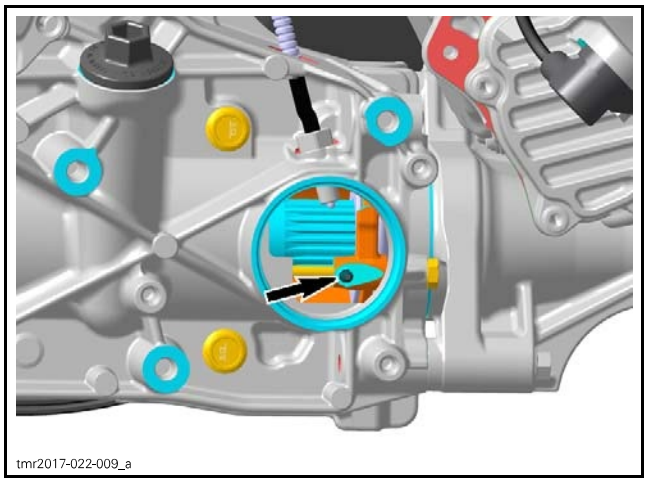

Align the 4WD actuator fork with the pin on coupling fork then push the 4WD actuator in the housing. See the following illustration to position the 4WD actuator correctly.

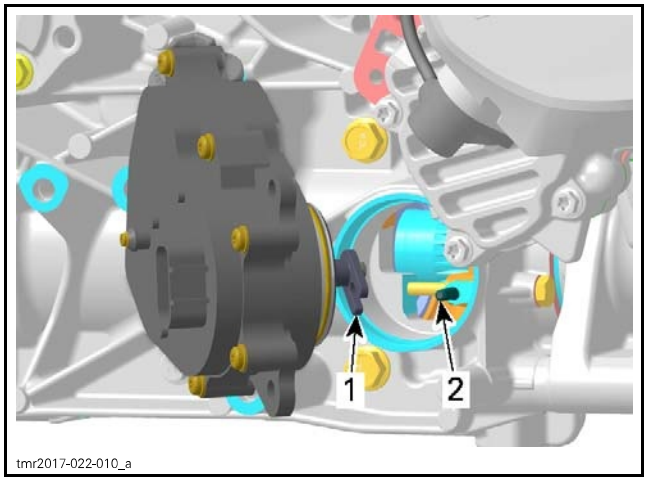

1. 4WD actuator fork
2. Coupling fork pin

Rotate the 4WD actuator counterclockwise until it orients itself to mounting position.

NOTICE **Do not cut or break the 4WD actuator O-ring.**

Install all 4WD actuator screws and tighten them.

TIGHTENING TORQUE	
4WD actuator screws	10 N•m ± 1 N•m (89 lbf•**in** ± 9 lbf•**in**)

Connect 4WD actuator.

Set gearbox to PARK position.

Lift the front of vehicle.

Turn front wheels. The front propeller shaft should not turn.

If the front propeller shaft turns, the 4WD actuator is not installed correctly. Remove 4WD actuator and reinstall it.

Place ignition switch to ON position and select the 2WD position.

Turn front wheel again. The front propeller shaft should turn easily.

If the front propeller shaft does not turn, the 4WD actuator is not installed correctly. Remove 4WD actuator and reinstall it.

NOTICE **Refill missing gearbox oil, refer to *GEARBOX OIL REPLACEMENT* in *PERIODIC MAINTENANCE PROCEDURES* subsection.**

Install all other removed parts.

GEARBOX OIL SEALS

Replacing Gearbox Oil Seal

Replace oil seals if they are brittle, hard or damaged.

A small flat screwdriver can be used to remove most of these oil seals.

NOTICE **Avoid scoring parts during oil seal removal.**

When replacing an oil seal, take this opportunity to inspect the following:

– Check bearings behind each oil seal for contamination and/or metal shavings.
– Check oil seal running surfaces for scratches.

Lubricating Oil Seal

When installing or reinstalling oil seals, use PETAMO GREASE GHY 133N (P/N 420 899 271) to:

– Lubricate sealing lips all around.
– Fill up the room between sealing lips halfway around the perimeter.

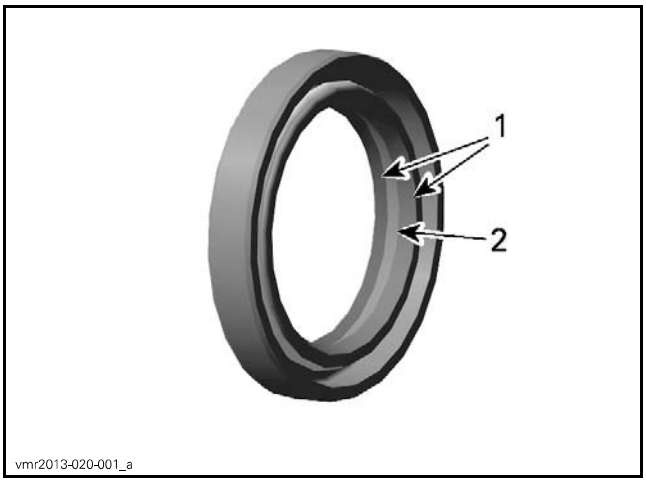

1. *Sealing lips*
2. *Room between sealing lips*

Countershaft Oil Seal

To replace the countershaft oil seal, remove:

– Drive and driven pulleys
– CVT air guide.

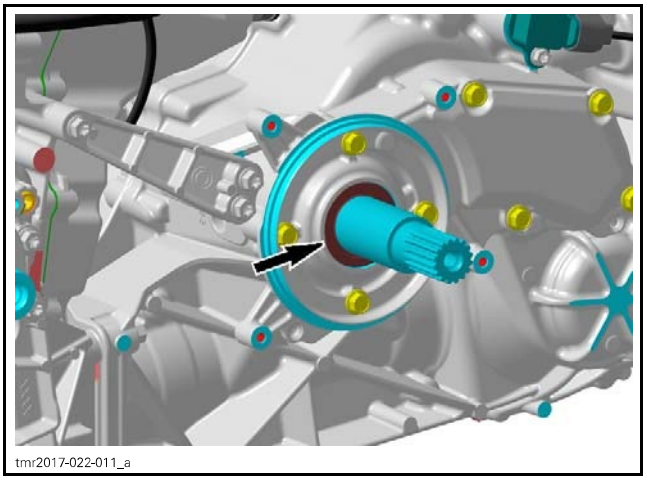

Install countershaft oil seal.

REQUIRED TOOL	
OIL SEAL INSTALLER (COUNTERSHAFT) (P/N 529 036 391)	

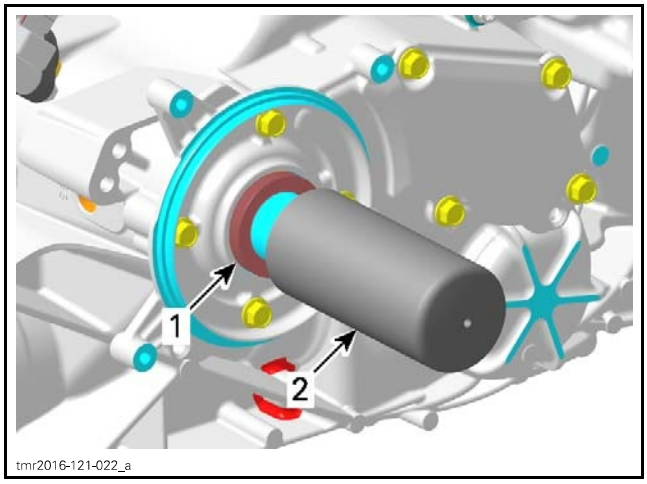

1. *Countershaft oil seal*
2. *Oil seal installer*

Shift Shaft Oil Seal

Remove the shift plate. Refer to *SHIFTER* subsection.

The shift shaft oil seal can be removed without removing the gearbox from the vehicle.

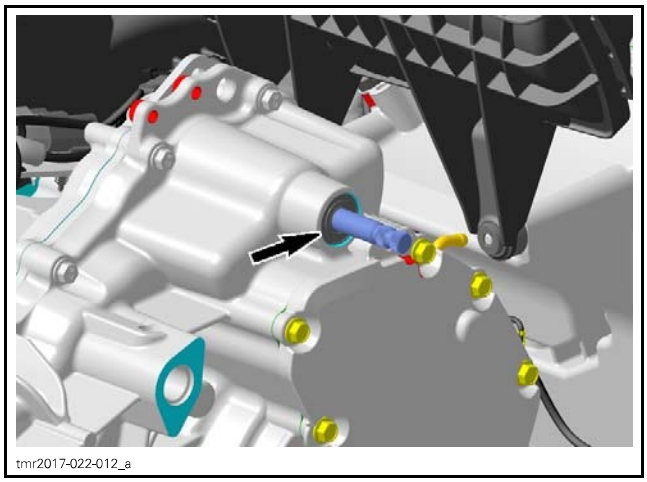

Use a suitable tube with the proper diameter to install the oil seal.

If gearbox housing is apart, use following tools for shift shaft oil seal installation.

REQUIRED TOOL	
OIL SEAL INSTALLER (GEARBOX) (P/N 529 035 758)	
HANDLE (P/N 420 877 650)	

NOTICE **Oil seal must be installed with sealing lip toward gearbox.**

Shift Drum Shaft Oil Seal

To replace the shift drum shaft oil seal, remove the *GBPS (GEARBOX POSITION SENSOR)*. See procedure in this subsection.

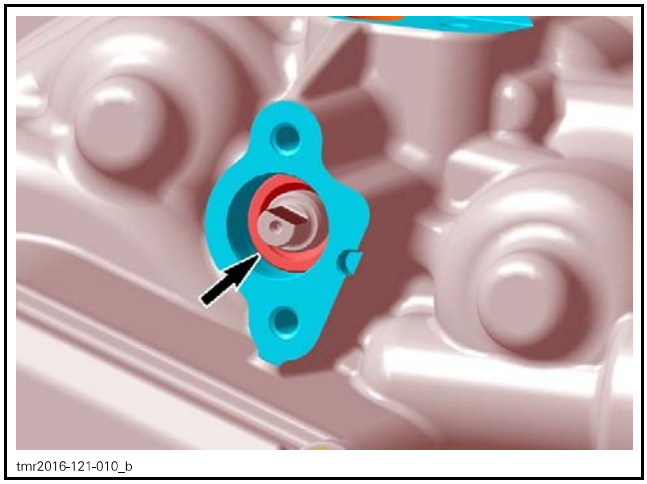
tmr2016-121-010_b

Use a suitable tube with the proper diameter to install the oil seal.

NOTICE **Oil seal must be installed with sealing lip toward gearbox.**

Drive Gear Oil Seals

Remove the appropriate drive shaft. Refer to *REAR DRIVE* subsection.

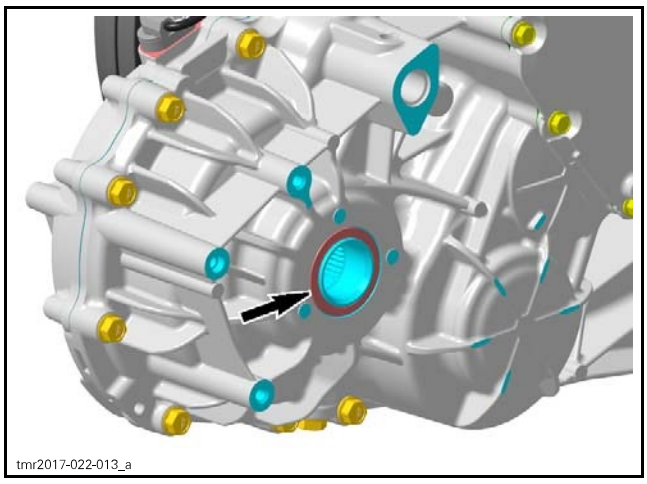
tmr2017-022-013_a

RIGHT SIDE

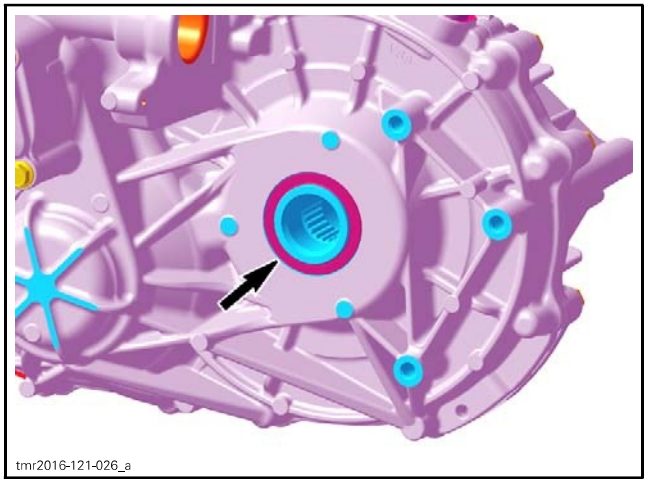
tmr2016-121-026_a

LEFT SIDE

Punch a sharp screwdriver through oil seal for removal.

Place oil seal on output shaft and install it using the following tools.

REQUIRED TOOL	
OIL SEAL GUIDE (P/N 529 036 433)	
OIL SEAL INSTALLER (DIFFERENTIAL OUTPUT) (P/N 529 036 390)	

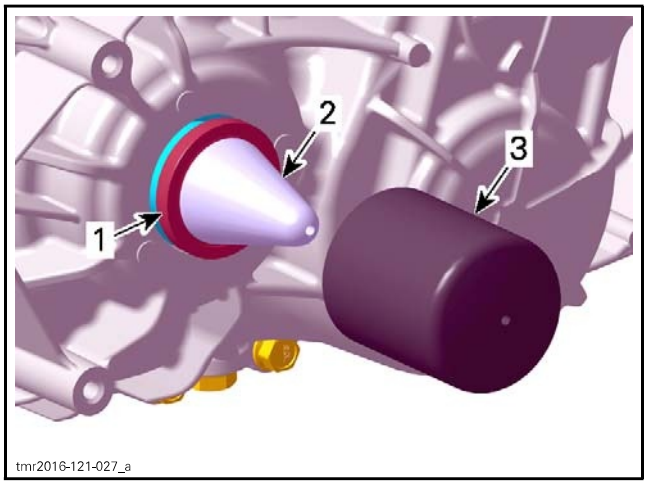

tmr2016-121-027_a

1. *Output shaft oil seal*
2. *Oil seal guide*
3. *Oil seal installer*

GEARBOX ASSEMBLY

Removing the Gearbox Assembly

Remove engine from vehicle. Refer to *ENGINE REMOVAL AND INSTALLATION* for the procedure.

Refer to *CONTINUOUSLY VARIABLE TRANSMISSION (CVT)* subsection to remove following parts:
– CVT cover
– Drive and driven pulleys
– CVT air guide.

Drain gearbox oil. Refer to *REPLACING THE GEARBOX OIL* in *PERIODIC MAINTENANCE PROCEDURES* subsection.

Remove gearbox bracket.

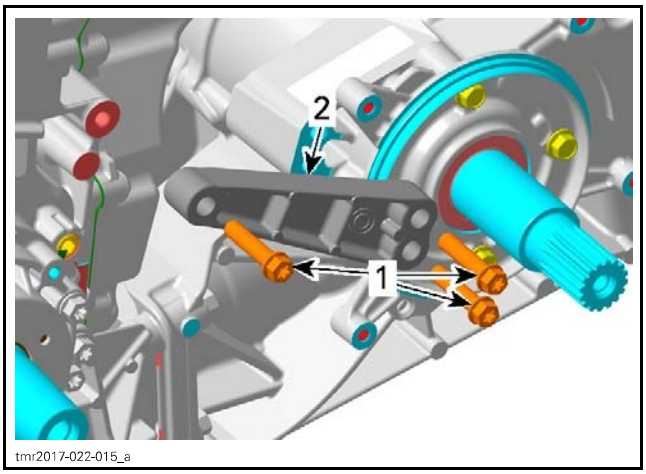

1. *Retaining screws*
2. *Gearbox bracket*

Remove engine bracket (MAG side).

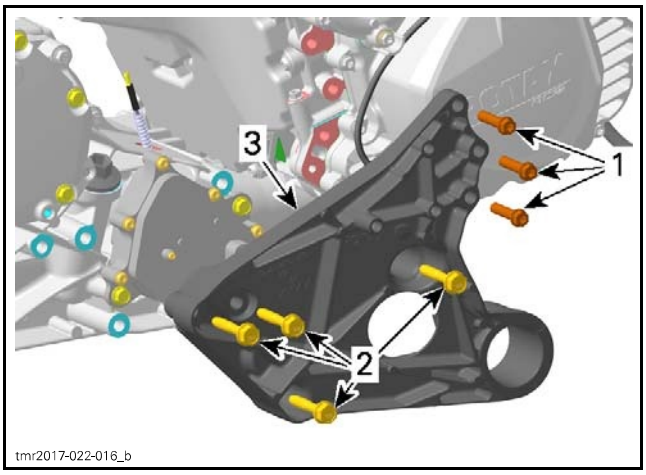

1. *Retaining screws M8 x 35 (3x)*
2. *Retaining screws M8 x 45 (4x)*
3. *Engine bracket (MAG side)*

Remove screws retaining the engine bracket (PTO side) to the cylinder block.

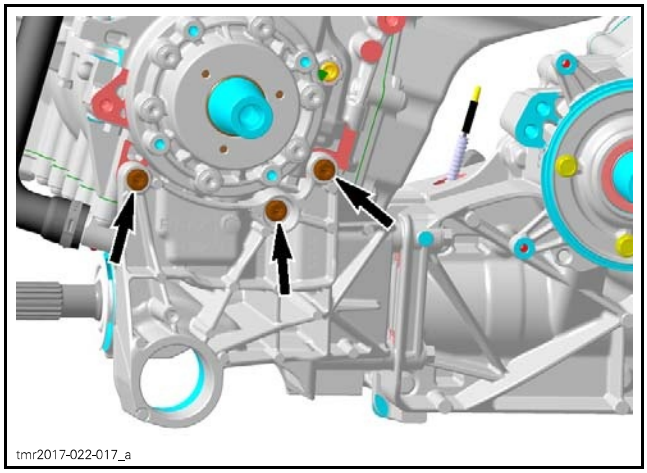

Detach gearbox with engine bracket (PTO side) from the engine.

Installing the Gearbox Assembly

For installation reverse the removal procedure. Pay attention to following.

Loosely install engine bracket (PTO side) retaining screws.

ENGINE BRACKET (PTO SIDE) RETAINING SCREWS	
Service product	LOCTITE 243 (BLUE) (P/N 293 800 060)

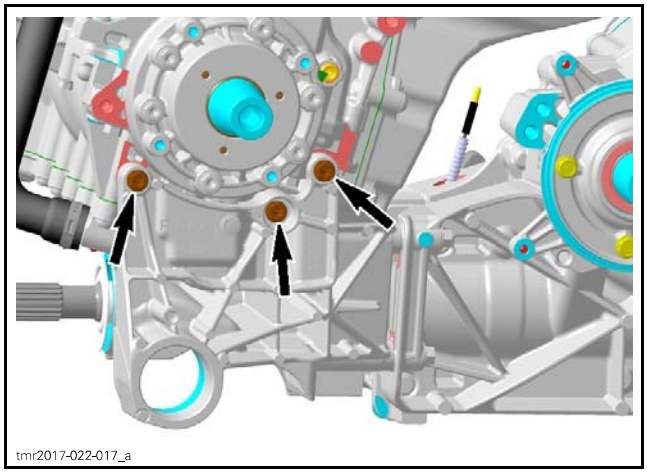

Loosely install engine bracket (MAG side) retaining screws.

ENGINE BRACKET (MAG SIDE) RETAINING SCREWS	
Service product	LOCTITE 243 (BLUE) (P/N 293 800 060)

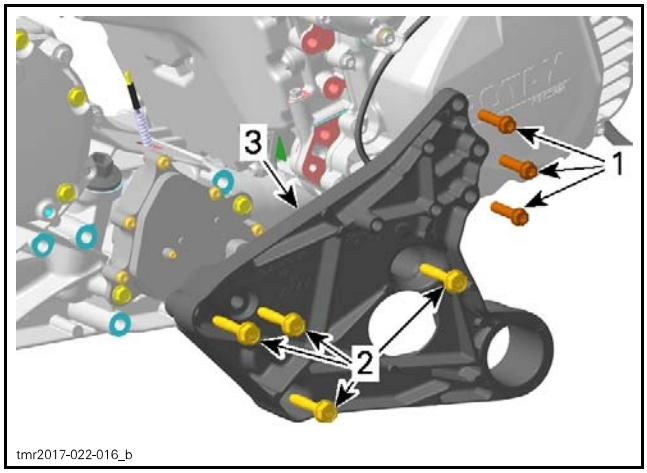

1. *Retaining screws M8 x 35 (3x)*
2. *Retaining screws M8 x 45 (4x)*
3. *Engine bracket (MAG side)*

Align gearbox assembly with engine:

1. Measure distance from shift shaft to oil tank rib
2. Measure distance from countershaft to CVT screw.

REQUIRED TOOL
Deep gauge

DISTANCE FROM SHIFT SHAFT TO OIL TANK RIB
280.5 mm ± 1 mm (11.04 in ± .04 in)

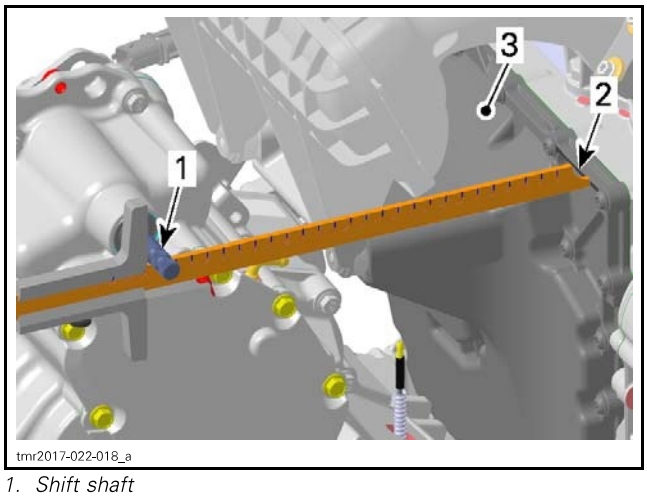

1. *Shift shaft*
2. *Rib*
3. *Oil tank*

DISTANCE FROM COUNTERSHAFT TO CRANKSHAFT/CVT SCREW
265.2 mm ± 1 mm (10.44 in ± .04 in)

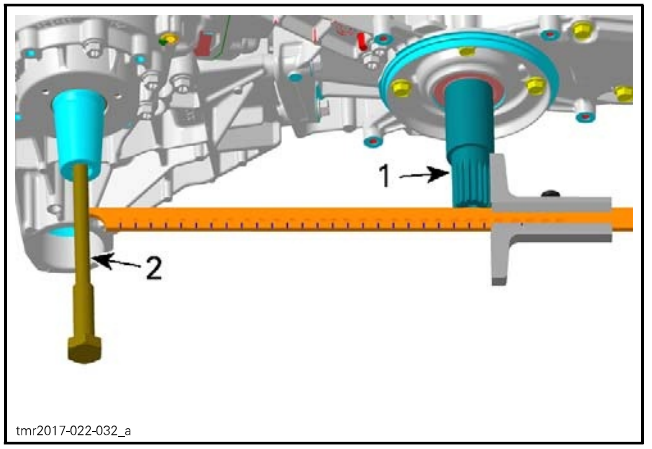

1. *Countershaft*
2. *CVT screw*

Tighten engine bracket (PTO side) retaining screws to specification.

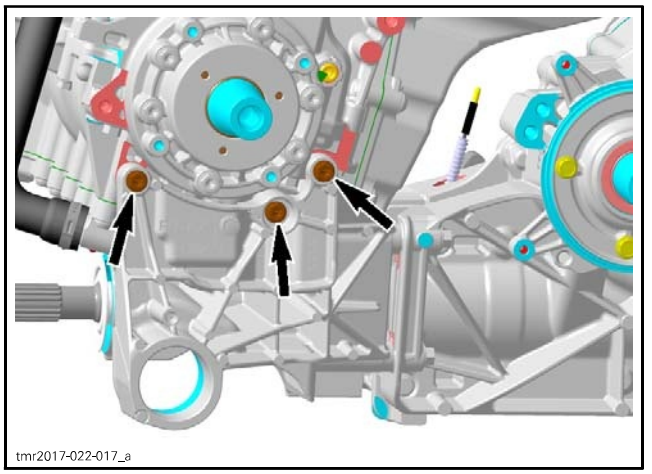

Tighten engine bracket (PTO side) retaining screws to specification.

TIGHTENING TORQUE		
Retaining screws M8 x 45	New gearbox	30 N•m ± 3 N•m (22 lbf•ft ± 2 lbf•ft)
	Reused gearbox	27 N•m ± 2 N•m (20 lbf•ft ± 1 lbf•ft)

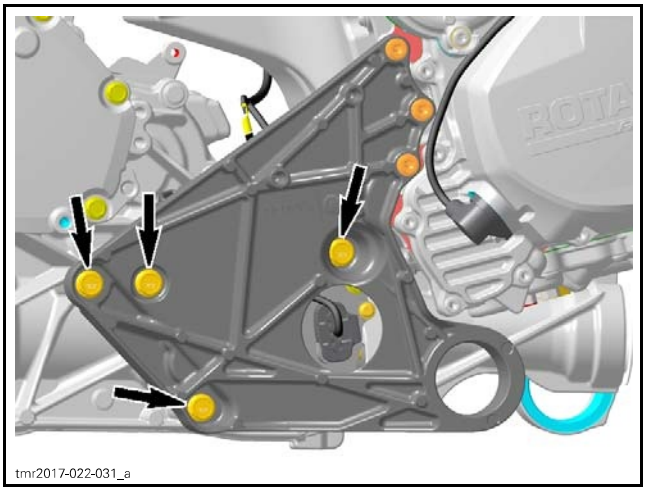

RETAINING SCREWS M8 X 45 (4X)

TIGHTENING TORQUE	
Retaining screws M8 x 35	30 N•m ± 3 N•m (22 lbf•ft ± 2 lbf•ft)

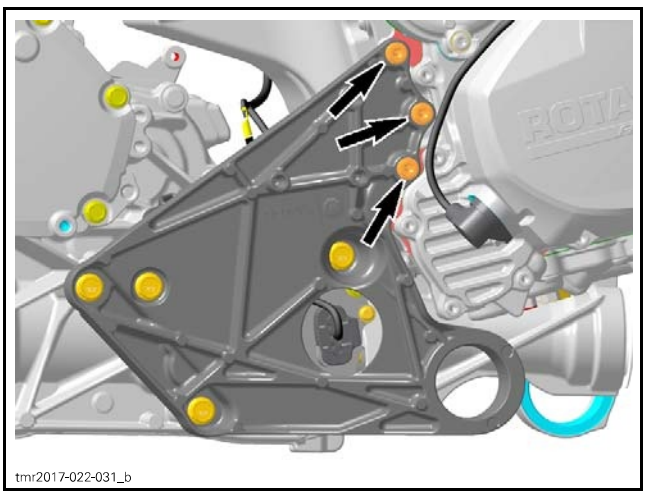

RETAINING SCREWS M8 X 35 (3X)

Install gearbox bracket.

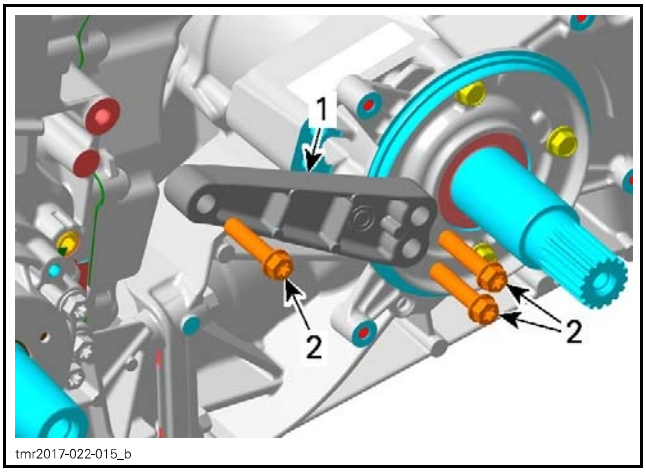

1. *Gearbox bracket*
2. *Retaining screws*

TIGHTENING TORQUE	
Service product	LOCTITE 243 (BLUE) (P/N 293 800 060)
Engine bracket (MAG side) retaining screws	30 N•m ± 3 N•m (22 lbf•ft ± 2 lbf•ft)

After installation refill gearbox oil, refer to *PERIODIC MAINTENANCE PROCEDURES* subsection.

ENGINE BRACKET (PTO SIDE) AND DRIVE SHAFT

Removing the Engine Bracket (PTO Side)

Remove gearbox assembly from engine, see procedure in this subsection.

Unscrew engine bracket (PTO side) retaining screws.

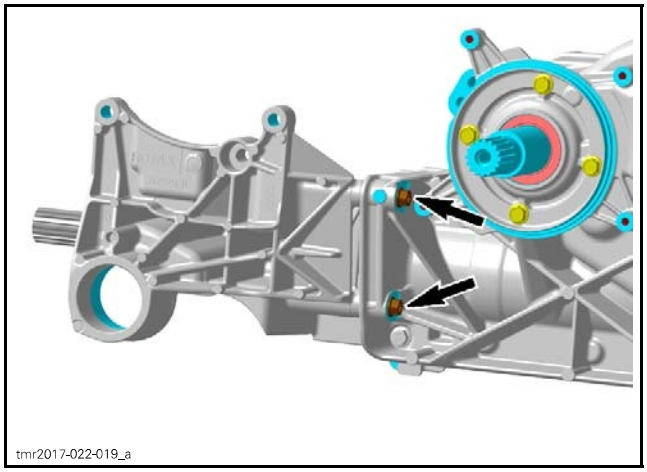

GEARBOX LH SIDE

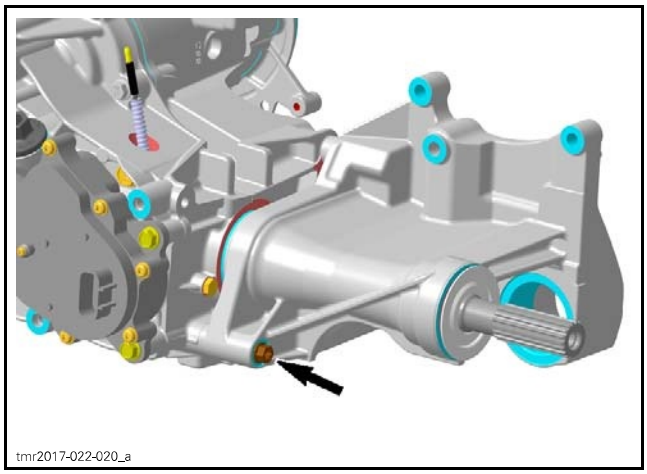

GEARBOX RH SIDE

Separate engine bracket (PTO Side) from gearbox.

Inspecting the Drive Shaft

Replace oil seal if brittle, hard or damaged.

Check oil seal running surface of the drive shaft for scratches. Replace if necessary.

Check drive shaft bearings for contamination and/or metal shavings. Check if bearings turn freely and smoothly. Replace if necessary.

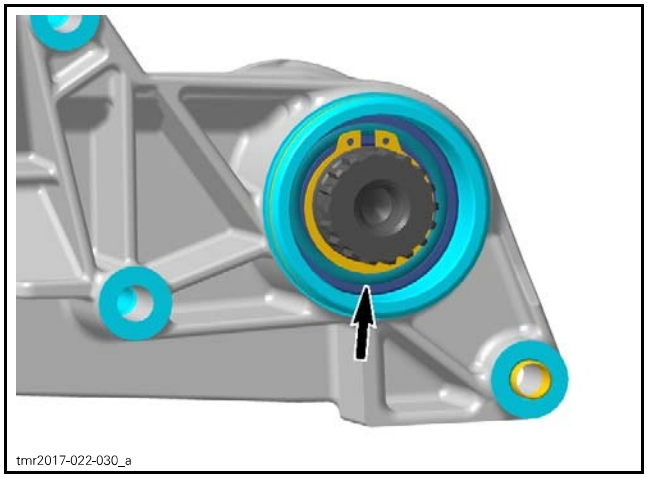
tmr2017-022-030_a

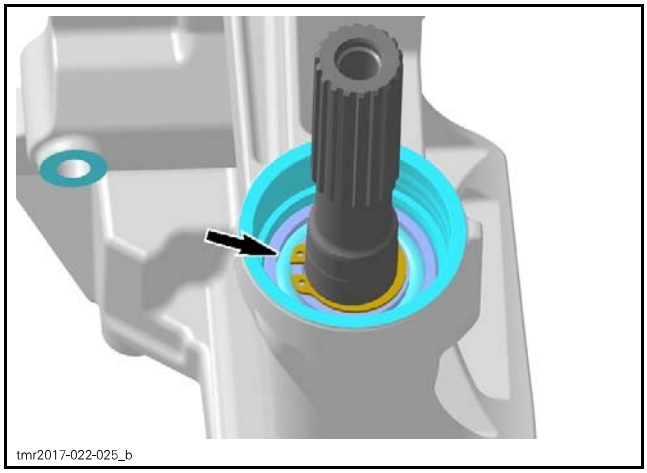
tmr2017-022-025_b

Check drive shaft splines for wear or damages.

Removing the Drive Shaft

Remove cover washer.

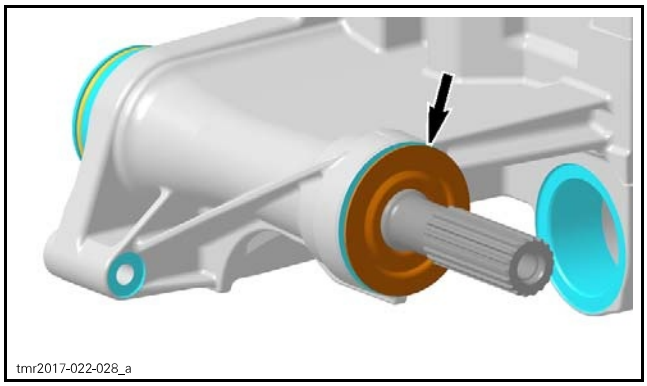
tmr2017-022-028_a

Remove oil seal.

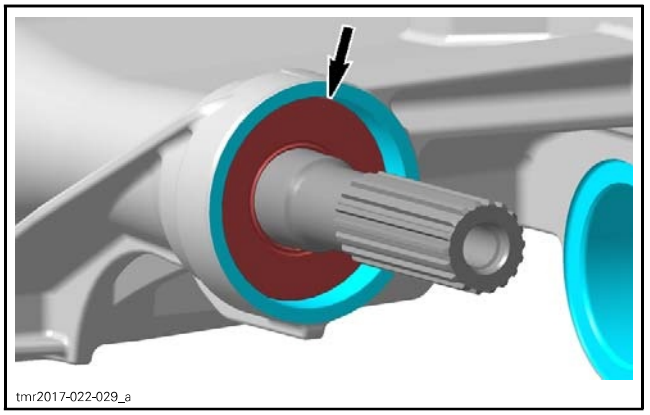
tmr2017-022-029_a

Remove retaining rings.

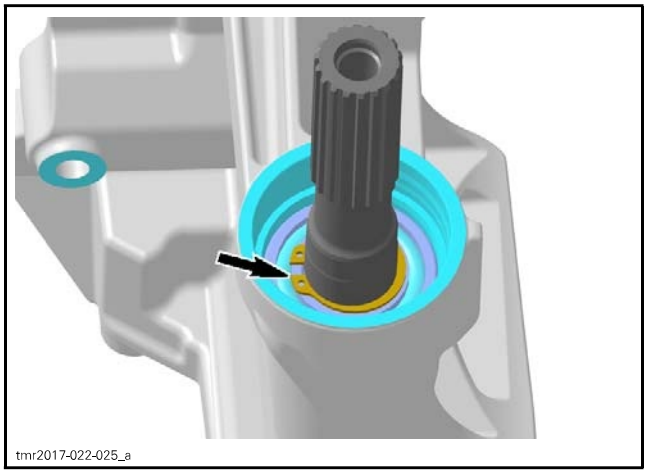
tmr2017-022-025_a

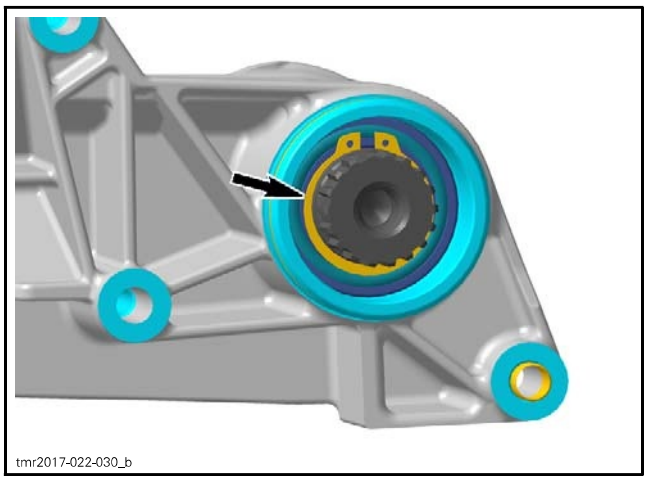
tmr2017-022-030_b

Press shaft with bearing out of engine bracket (PTO side).

If necessary remove the remaining bearing out of the engine bracket (PTO side).

Check drive shaft for cracks, bend, pitting or other visible damages.

Installing the Drive Shaft

The following tool is required to install bearings, the oil seal and the cover washer.

REQUIRED TOOL	
PUNCH (P/N 529 036 425)	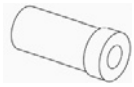

Install bearing (gearbox side).

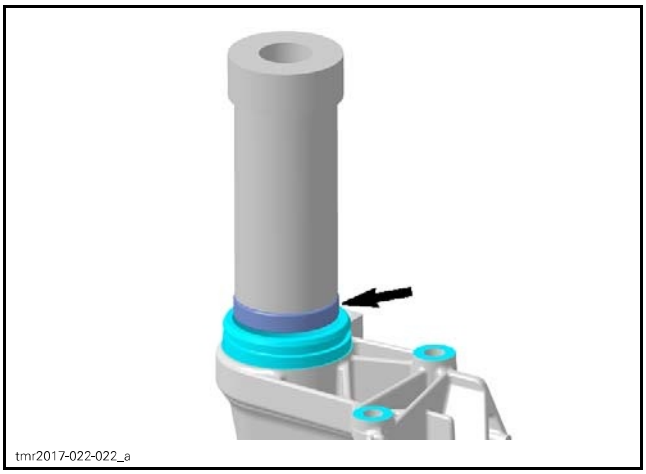

Install:
- Drive shaft
- Retaining ring.

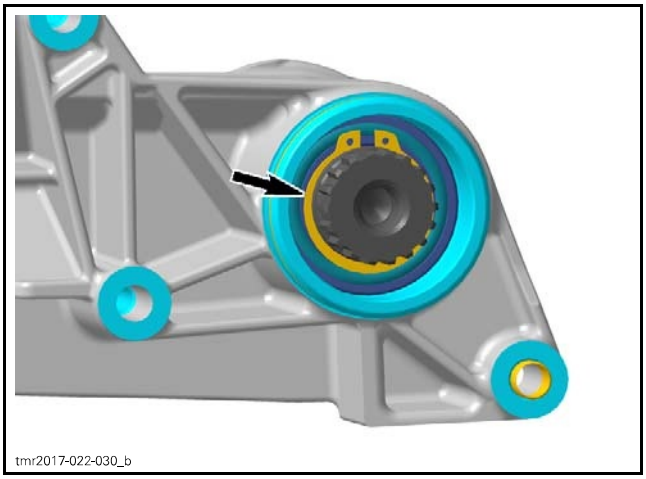

Install bearing (engine side).

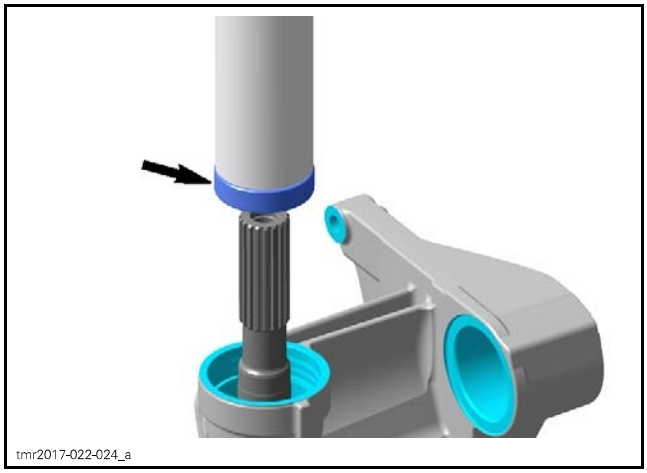

Install retaining ring.

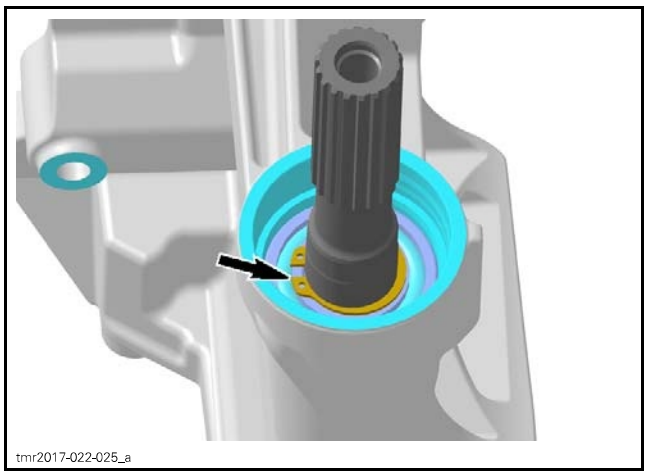

Install oil seal.

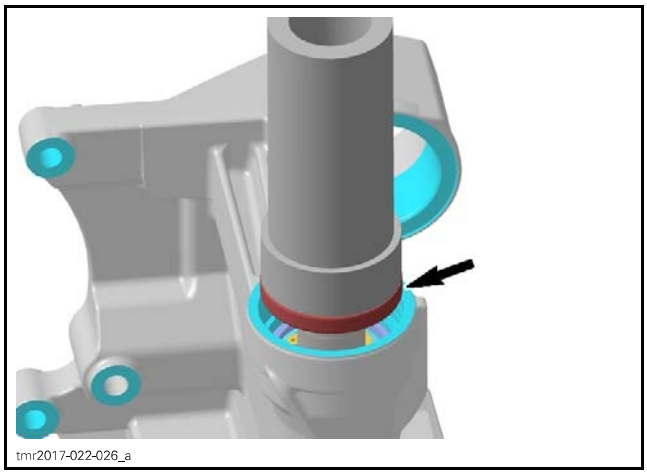

Install **NEW** cover washer.

NOTE: Groove must face outwards the engine bracket.

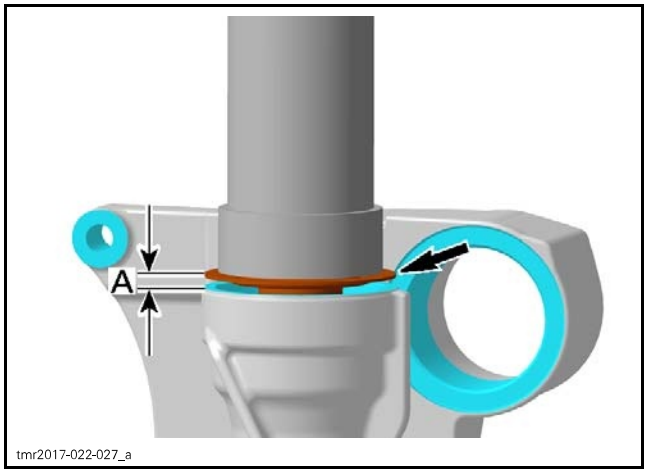

COVER WASHER INSTALLATION
A. 2 mm to 3 mm (.079 in to .118 in)

Installing the Engine Bracket (PTO Side)

Before engine bracket (PTO Side) installation check O-ring if brittle, hard or damaged. Replace if necessary.

Lubricate O-ring.

O-RING LUBRICATION	
Service product	Engine oil

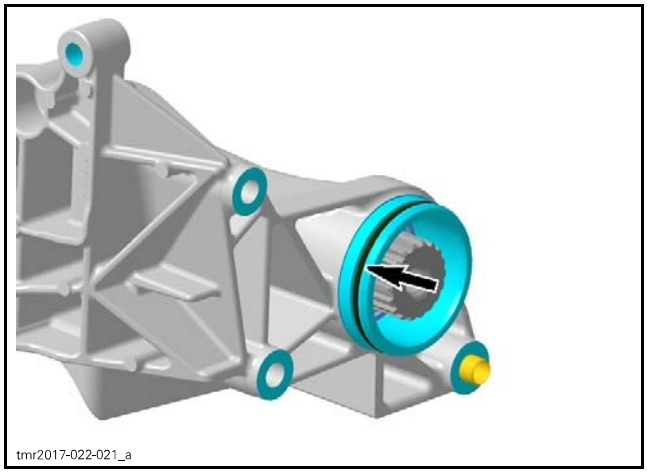

Tighten engine bracket (PTO Side) retaining screws to specification.

TIGHTENING TORQUE	
Service product	LOCTITE 243 (BLUE) (P/N 293 800 060)
Engine bracket (PTO Side) retaining screws	30 N•m ± 3 N•m (22 lbf•ft ± 2 lbf•ft)

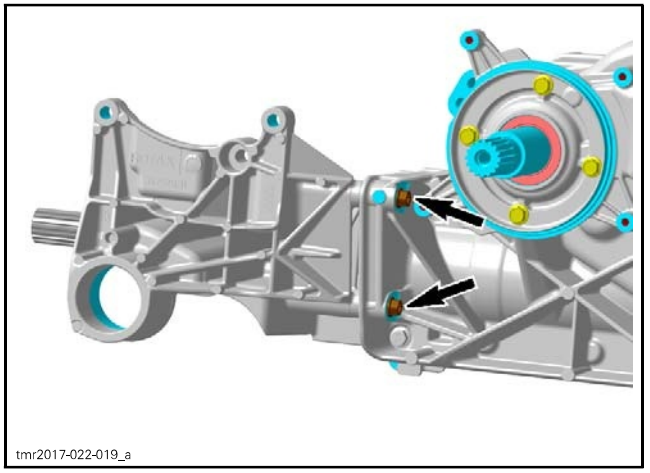

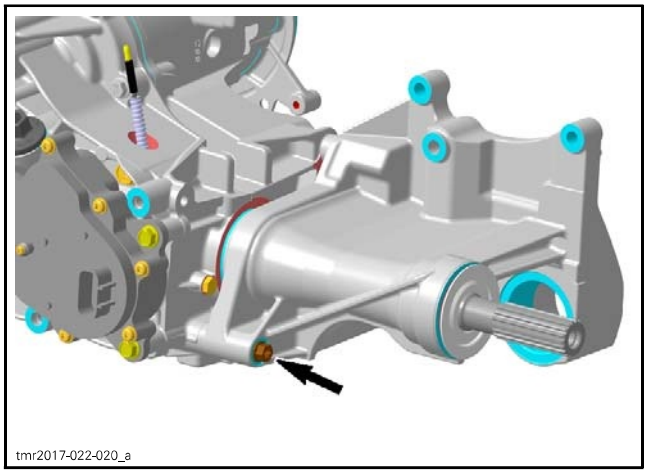

GEARBOX HOUSING

Disassembling the Gearbox Housing

See procedures in this subsection to remove:
- *ENGINE BRACKET (PTO SIDE)*
- *4WD ACTUATOR*
- *GBPS (GEARBOX POSITION SENSOR)*.

Set gearbox to PARK position.

Remove bearing cover.

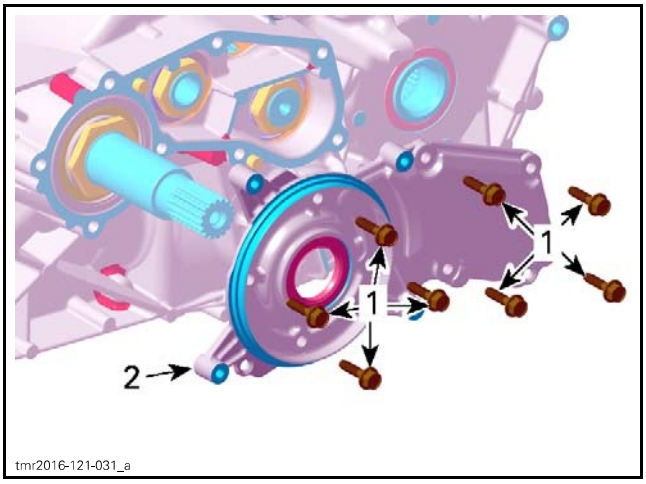

1. *Retaining screws*
2. *Bearing cover*

Remove countershaft nut.

NOTE: Heat up nut with a heat gun to break threadlocker.

⚠ CAUTION Nut can loosen abruptly.

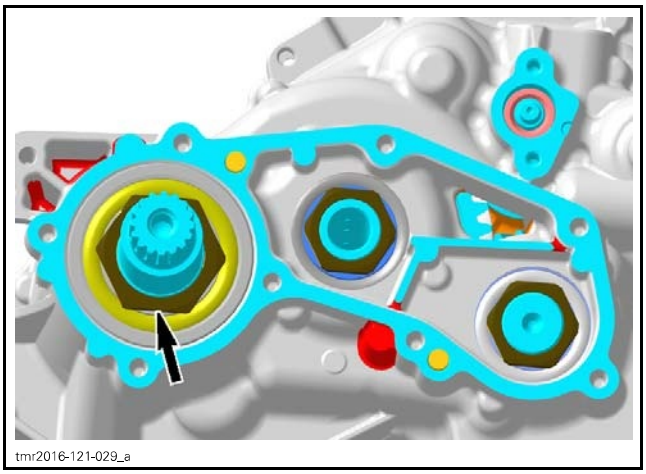

REQUIRED TOOL	
M34 SOCKET (P/N 529 036 388)	
SPLINES SOCKET 1/2" (P/N 529 036 389)	

NOTICE Turn spline socket clockwise to loosen the nut.

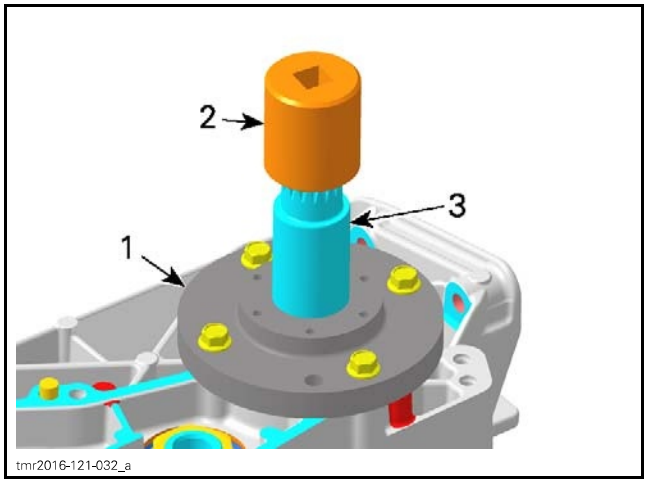

1. *M34 socket*
2. *Spline socket*
3. *Countershaft*

Remove nuts of main shaft and intermediate shaft.

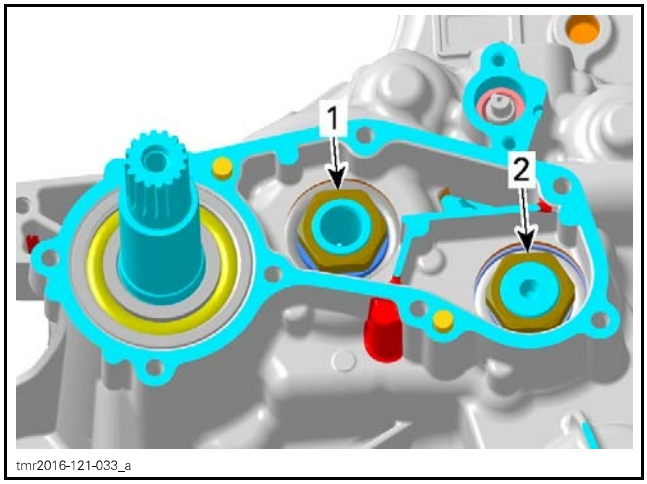

1. *Main shaft nut*
2. *Intermediate shaft nut*

Refer to *GEARBOX AND SHIFTING MECHANISM* in this subsection and remove:

– Parking lock gear
– Index washer.

Remove all gearbox housing screws:

1. Start removing the M6 screws.
2. Then remove the M8 screws.

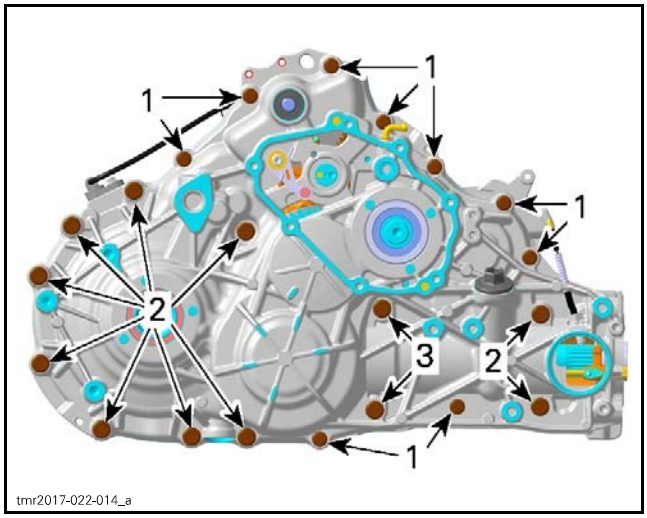

1. *11 screws M6 x 45*
2. *10 screws M8 x 45*
3. *2 screws M8 x 65*

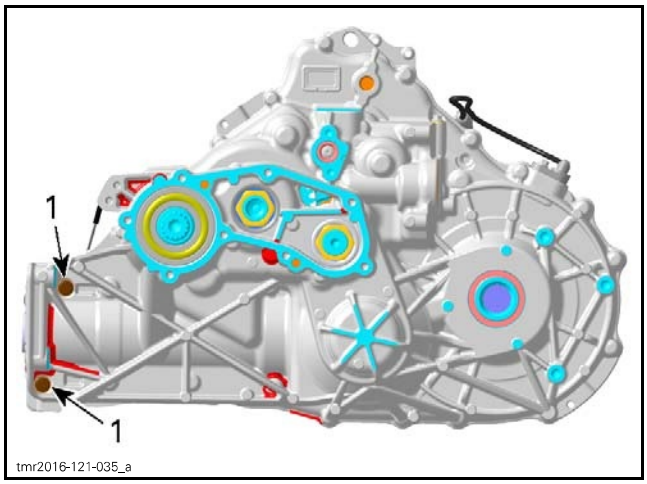

1. *2 screws M6 x 45*

Separate gearbox housing, use 2 big screwdrivers.

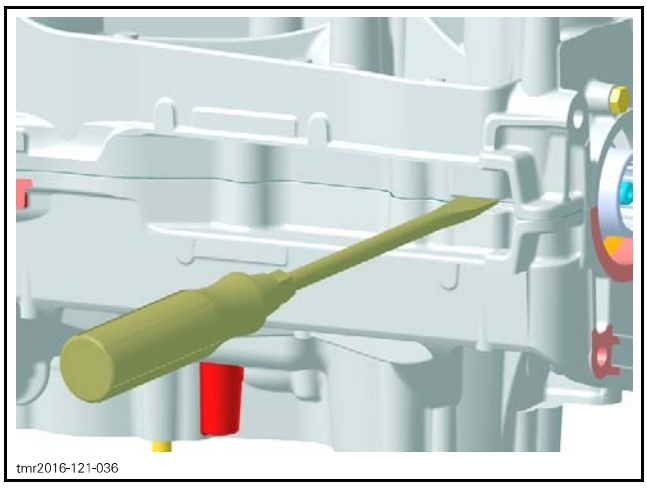

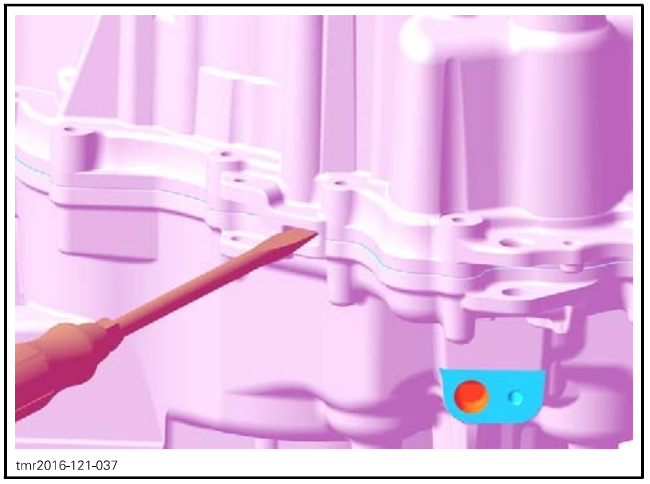

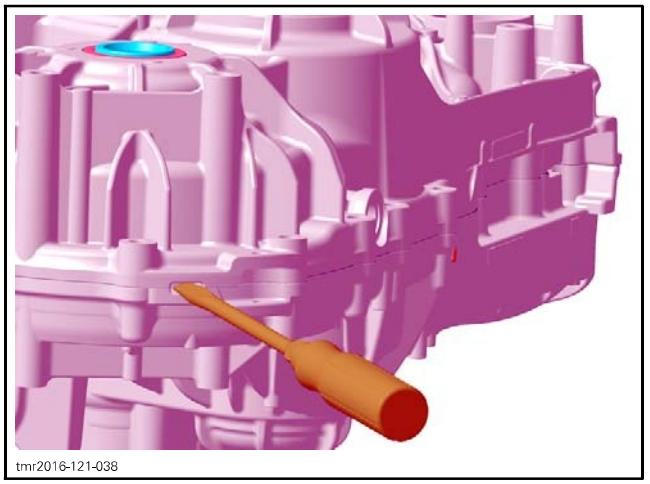

If necessary, refer to procedures in this subsection and remove:

- *GEARBOX AND SHIFTING MECHANISM*
- *OUTPUT SHAFT AND COUPLING MECHANISM*
- *DRIVE GEAR*.

Inspecting the Gearbox Housing

Check gearbox ball bearings for: contamination and/or metal shavings.

Check if ball bearings turn freely and smoothly. Replace if necessary.

Replacing Bearing

If necessary heat housing up to 100°C (212°F) before removing ball bearings.

⚠ WARNING

Clean oil, outside and inside, from housing before heating.

NOTICE Always support gearbox housings properly when ball bearings are removed. Housing damages may occur if this procedure is not performed correctly.

Use a blind hole bearing puller to remove ball bearings of:

– Countershaft (right cover)
– Intermediate shaft (right cover).

Remove retaining plate securing the main shaft and intermediate shaft bearings in the left housing.

Remove screw securing the main shaft bearing in the right cover.

Use a suitable puller to remove ball bearings of:

– Main shaft (right and left cover)
– Countershaft (left cover)
– Intermediate shaft (left cover)
– Drive gear ball bearings (right and left cover).

.

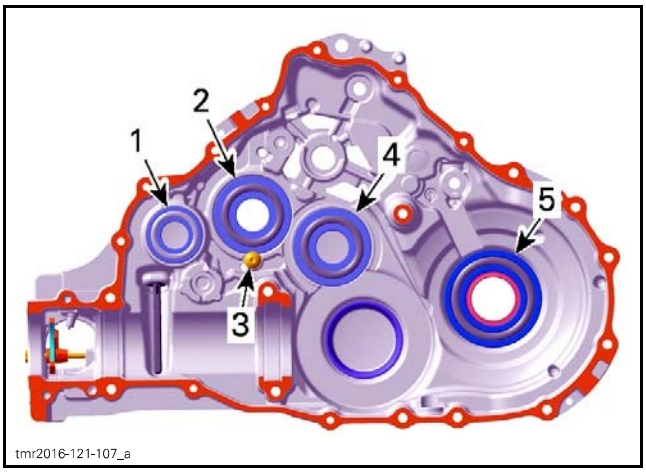

RIGHT GEARBOX HOUSING
1. *Ball bearing countershaft*
2. *Ball bearing main shaft*
3. *Screw*
4. *Ball bearing intermediate shaft*
5. *Ball bearing drive gear*

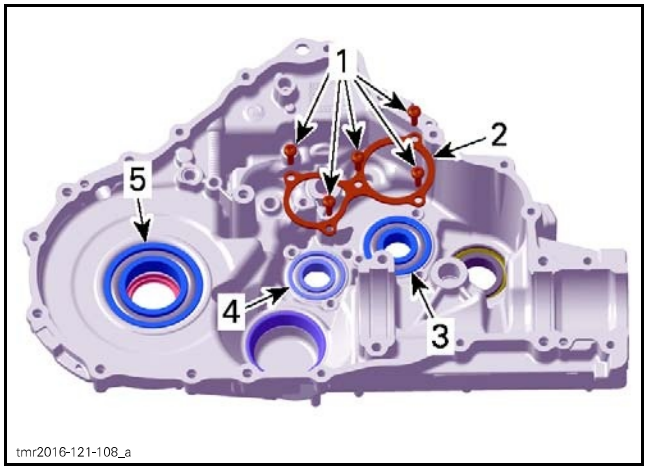

LEFT GEARBOX HOUSING
1. *Screws*
2. *Retaining plate*
3. *Ball bearing main shaft*
4. *Ball bearing intermediate shaft*
5. *Ball bearing drive gear*

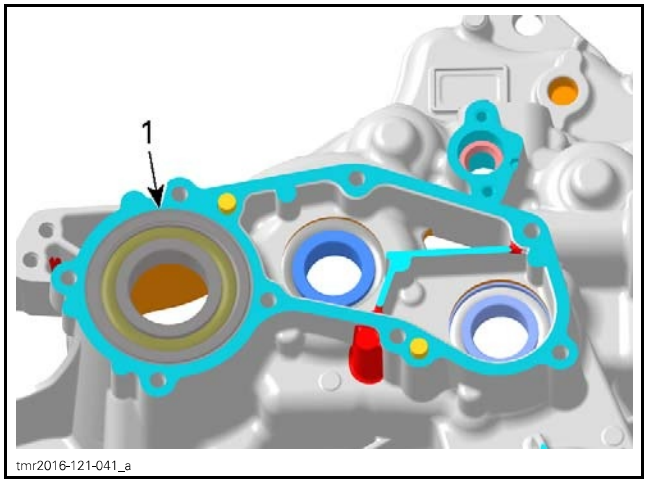

LEFT GEARBOX HOUSING
1. *Ball bearing countershaft*

Unless otherwise instructed, never use hammer to install ball bearings. Use press machine only.

If necessary heat housings up to 100°C (212°F) before installing ball bearings.

⚠ WARNING

Clean oil, outside and inside, from housing before heating.

Place new bearing in freezer for 10 minutes before installation.

Use a suitable installer for installing ball bearings of countershaft, main shaft and intermediate shaft.

NOTE: Place gearbox housings on a wood stand before installing ball bearings.

TIGHTENING TORQUE	
Retaining plate screws	10 N•m ± 1 N•m (89 lbf•**in** ± 9 lbf•**in**)

TIGHTENING TORQUE	
Service product	LOCTITE 243 (BLUE) (P/N 293 800 060)
Retaining screw main shaft bearing (right cover)	10 N•m ± 1 N•m (89 lbf•**in** ± 9 lbf•**in**)

Install new oil seals with the proper installer (refer to *GEARBOX OIL SEALS* in this subsection).

Assembling the Gearbox Housing

Clean all metal components in a solvent.

Gearbox housing mating surfaces are best cleaned using a combination of LOCTITE CHISEL (GASKET REMOVER) (P/N 413 708 500) and a brass brush. Brush a first pass in one direction then make the final brushing perpendicularly (90°) to the first pass cross (hatch).

NOTICE **Do not wipe with rags. Use a new clean hand towel only.**

IMPORTANT: When beginning the application of the gear housing sealant, the assembly and the first torquing should be done within 10 minutes. It is suggested to have all you need on hand to save time.

Place sleeve installer on drive gear.

REQUIRED TOOL	
OIL SEAL GUIDE (P/N 529 036 433)	

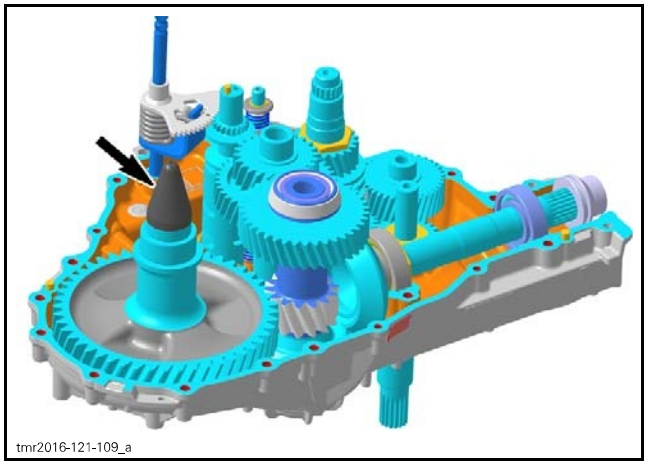

Apply sealant on mating surface.

GEARBOX HOUSING MATING SURFACE SEALANT	
Service product	LOCTITE 5910 (P/N 293 800 081)

Use a plexiglass plate and apply some sealant on it. Use a soft rubber roller (50 mm - 75 mm (2 in - 3 in)), available in arts products suppliers for printing, and roll the sealant to get a thin uniform coat on the plate (spread as necessary). When ready, apply the sealant on gearbox housing mating surfaces.

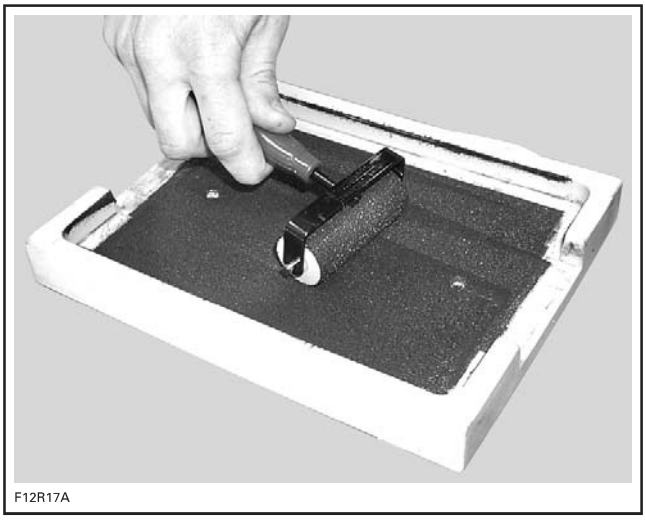

Do not apply in excess as it will spread out inside gearbox housing.

NOTE: It is recommended to apply this specific sealant as described here to get a uniform application without lumps. If you do not use the roller method, you may use your finger to uniformly distribute the sealant (using a finger will not affect the adhesion).

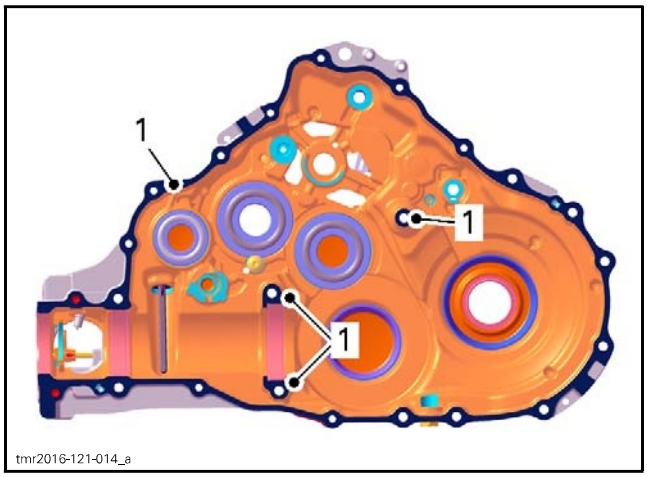

1. *Apply sealant here*

During installation of the right gearbox housing align the coupling fork with the groove in the coupling sleeve.

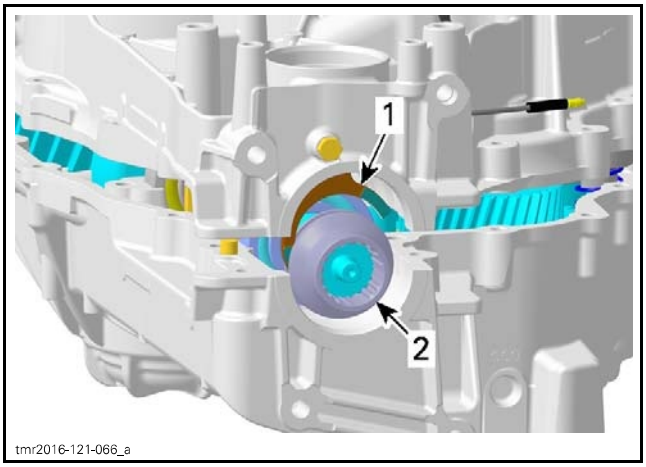

1. *Coupling fork*
2. *Coupling sleeve*

Install all gearbox housing screws.

Tighten M8 gearbox housing screws as per following sequence.

TIGHTENING TORQUE	
M8 gearbox housing screws	25 N•m ± 3 N•m (18 lbf•ft ± 2 lbf•ft)

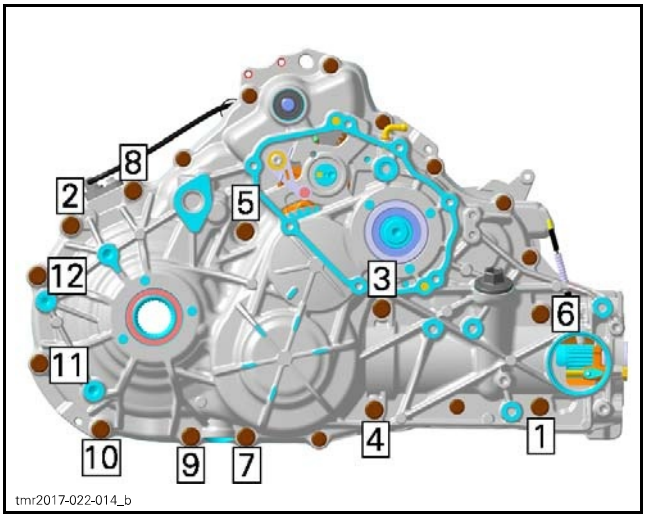

Tighten M6 gearbox housing screws as per following sequence.

TIGHTENING TORQUE	
M6 gearbox housing screws	10 N•m ± 1 N•m (89 lbf•**in** ± 9 lbf•**in**)

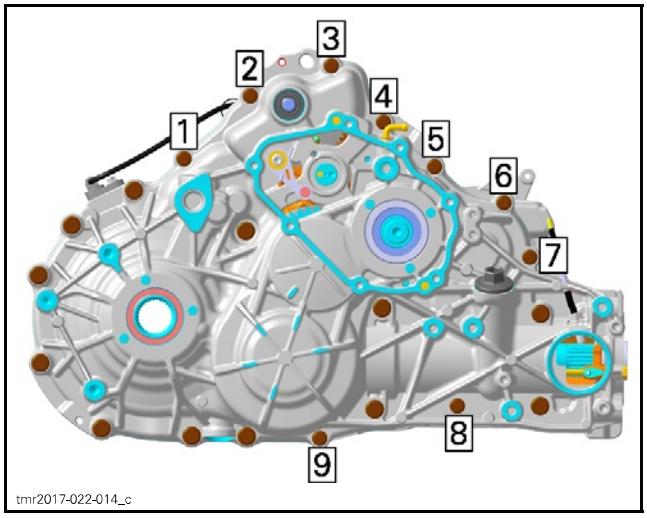

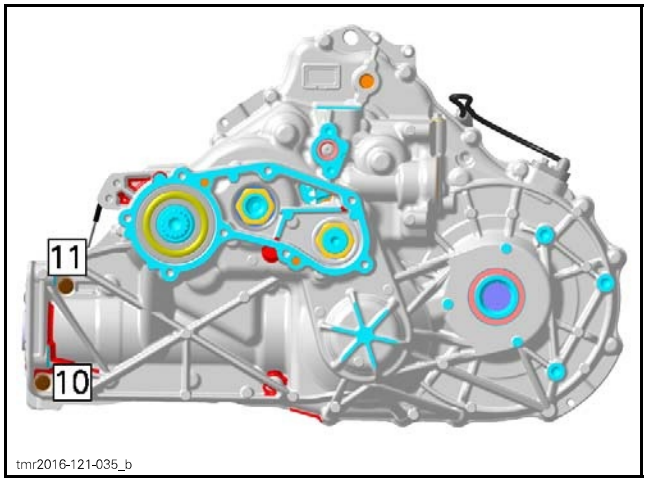

Refer to *GEARBOX AND SHIFTING MECHANISM* in this subsection to install:

- Index lever
- Index washer
- Parking lock gear
- Parking lock lever.

Set gearbox to PARK position.

Tighten main shaft and intermediate shaft nuts to specification.

TIGHTENING TORQUE	
Service product	LOCTITE 648 (GREEN) (P/N 413 711 400)
Main shaft and intermediate shaft nuts	170 N•m ± 10 N•m (125 lbf•ft ± 7 lbf•ft)

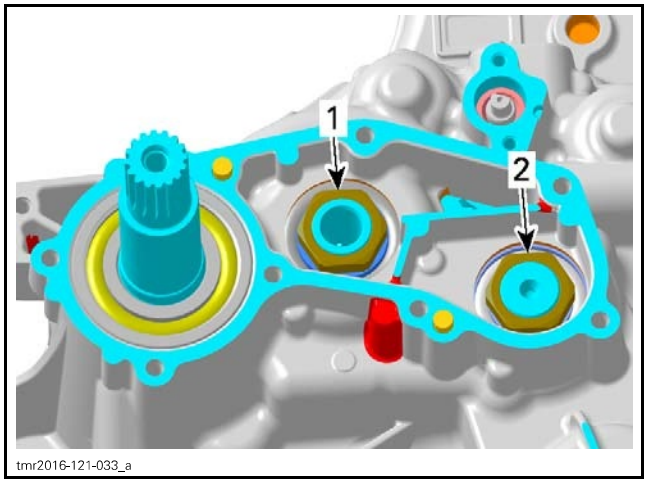

1. *Main shaft nut*
2. *Intermediate shaft nut*

Tighten countershaft nut to specification.

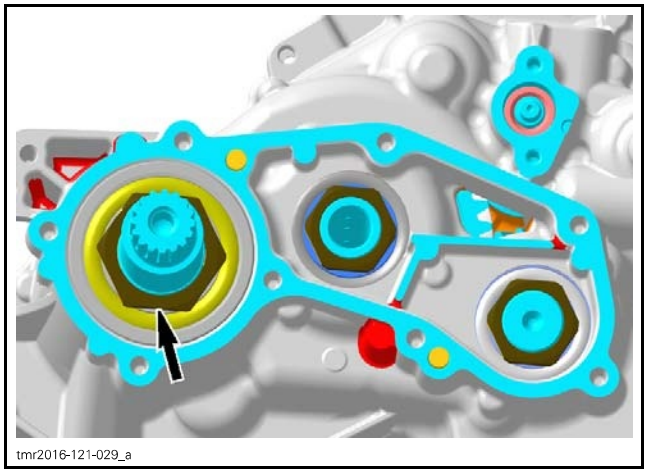

TIGHTENING TORQUE	
Service product	LOCTITE 648 (GREEN) (P/N 413 711 400)
Countershaft nut	170 N•m ± 10 N•m (125 lbf•ft ± 7 lbf•ft)

REQUIRED TOOL	
M34 SOCKET (P/N 529 036 388)	
SPLINES SOCKET 1/2" (P/N 529 036 389)	

NOTICE **Turn spline socket counterclockwise to tighten the nut.**

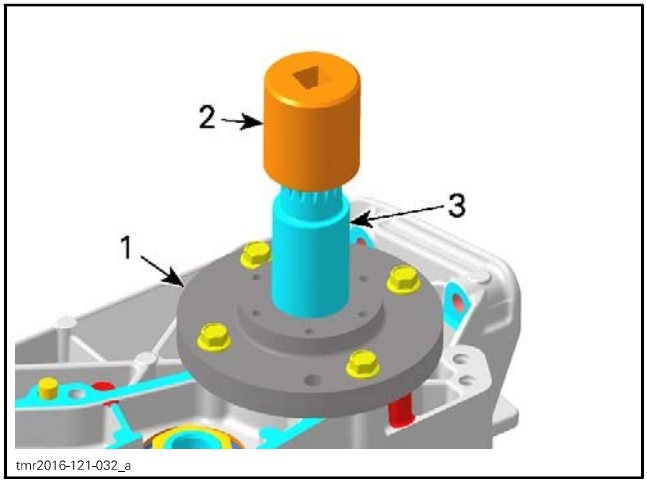

1. *M34 socket*
2. *Spline socket*
3. *Countershaft*

Apply sealant on mating surface of bearing housing.

BEARING HOUSING MATING SURFACE SEALANT	
Service product	LOCTITE 5910 (P/N 293 800 081)

Install bearing housing screws and tighten them as per following sequence.

TIGHTENING TORQUE	
Bearing housing screws	10 N•m ± 1 N•m (89 lbf•**in** ± 9 lbf•**in**)

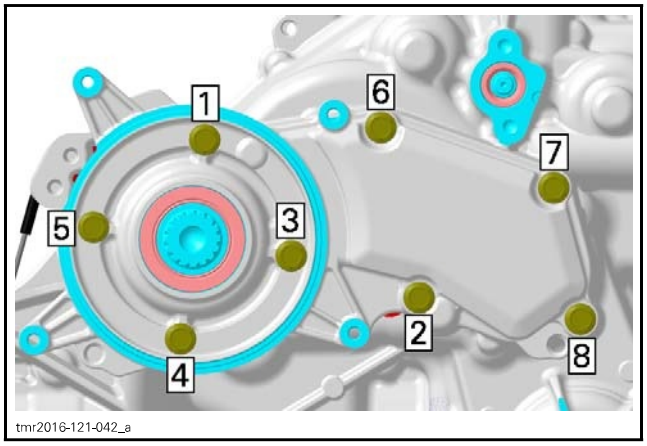

GEARBOX AND SHIFTING MECHANISM

Disassembling the Gearbox and Shifting Mechanism

During gearbox and shifting mechanism disassembly, inspect the condition of each part closely.

Index Lever, Index Washer and Parking Lock Lever

Set gearbox to PARK position.

Remove:
- Retaining screws
- Gearbox cover
- Gasket (discard it).

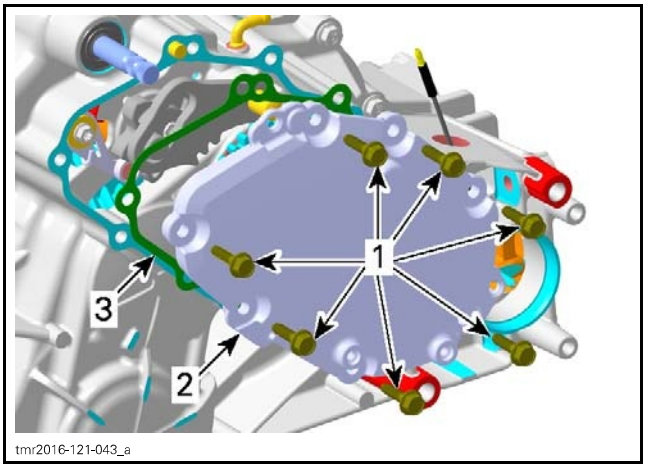

1. Retaining screws
2. Gearbox cover
3. Gasket

Remove:
- Nut
- Spring washer
- Park locking gear.

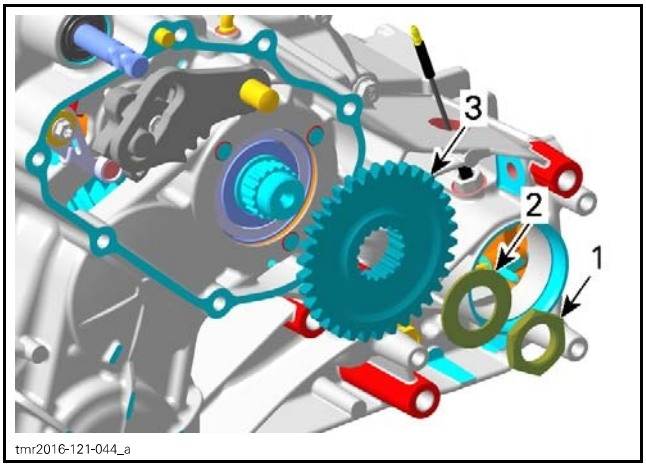

1. Nut
2. Spring washer
3. Park locking gear

Remove:
- Pin
- Park locking lever.

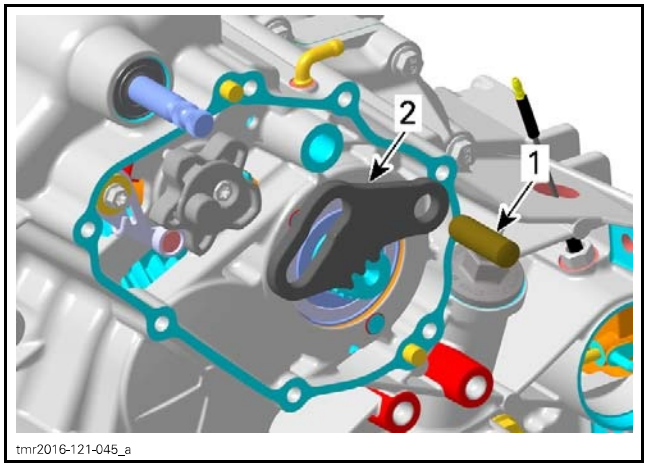

1. Pin
2. Park locking lever

Remove screw retaining the index washer to the shift drum.

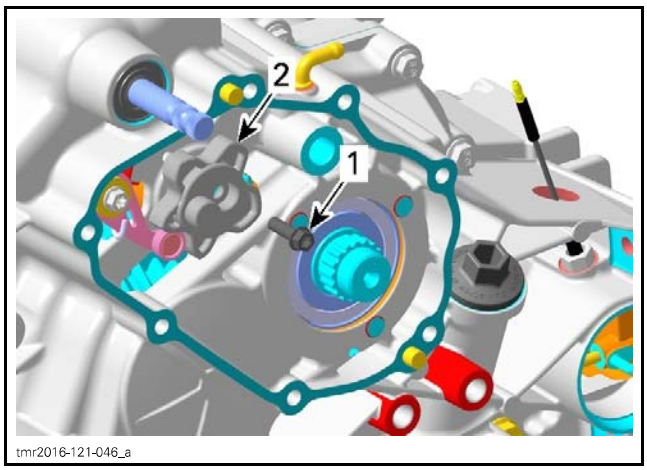

1. Screw
2. Index washer

Insert a flat screwdriver in the slot of index lever. Turn screwdriver clockwise and remove index washer.

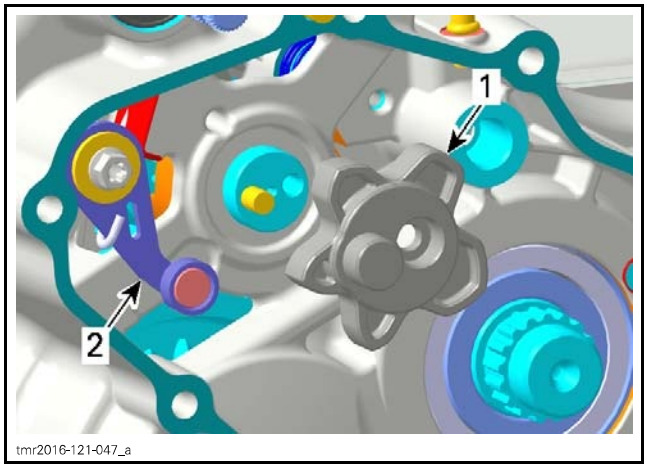

1. Index washer
2. Index lever

Remove the index lever with washer, step ring and spring.

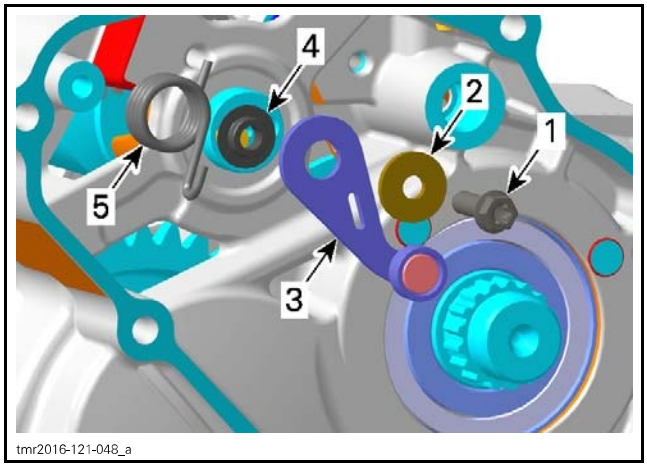

tmr2016-121-048_a

1. *Screw*
2. *Washer*
3. *Index lever*
4. *Step ring*
5. *Index spring*

Shift Shaft Assembly

Separate gearbox housing, refer to *GEARBOX HOUSING* in this subsection.

Withdraw shift shaft assembly.

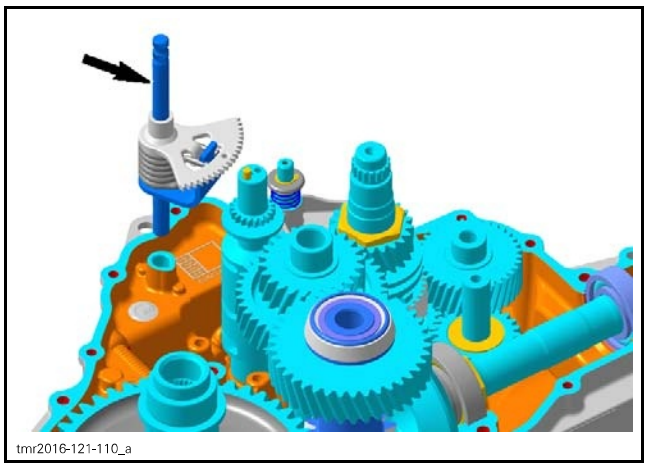
tmr2016-121-110_a

Countershaft and Reverse Intermediate Gear

Separate gearbox housing, refer to *GEARBOX HOUSING* in this subsection.

Use a soft hammer to push out countershaft from gearbox housing CVT side.

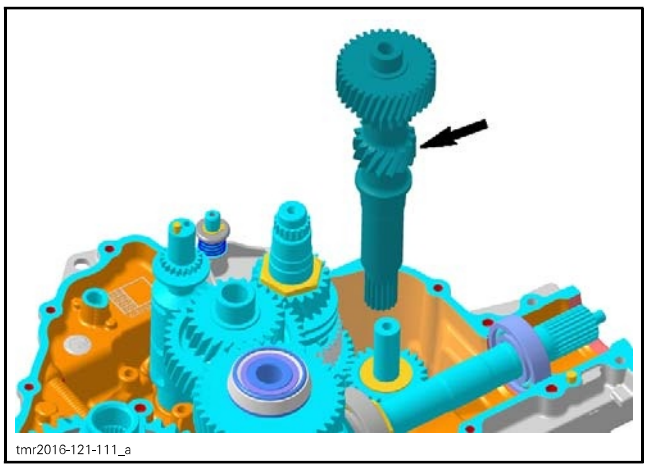
tmr2016-121-111_a

Remove:
- Bearing pin
- Reverse intermediate gear
- Needle bearing
- Thrust washers.

NOTE: Take care not to lose lower thrust washer during removal.

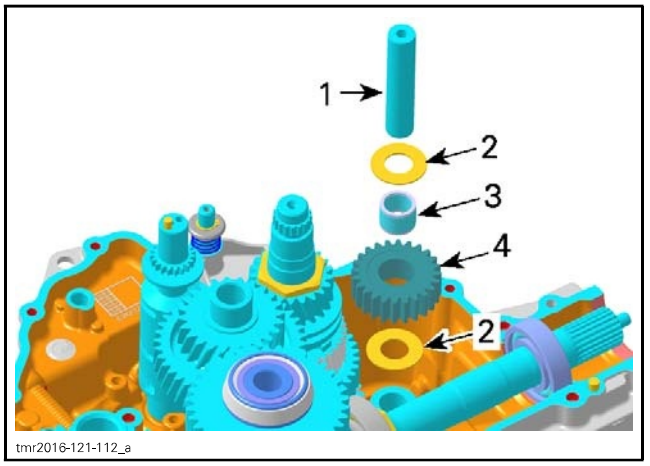

tmr2016-121-112_a

1. *Bearing pin*
2. *Thrust washers*
3. *Needle bearing*
4. *Reverse intermediate gear*

Pinion Drive Shaft and Intermediate Shaft

Separate gearbox housing, refer to *GEARBOX HOUSING* in this subsection.

Remove:
1. Pinion drive shaft
2. Intermediate shaft.

NOTE: Bevel gear and distance shim remain in gearbox housing.

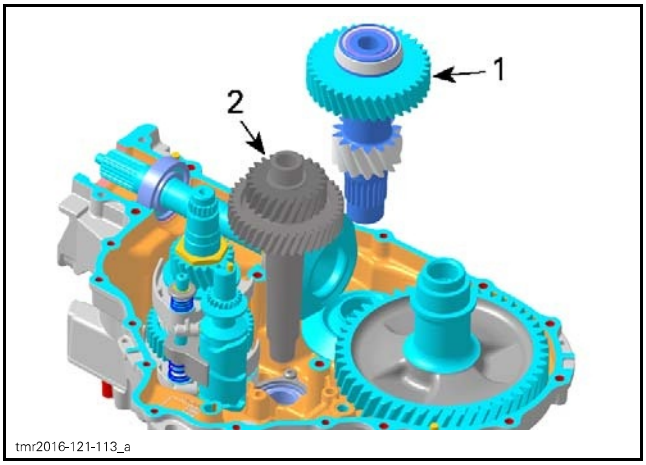

1. *Pinion drive shaft*
2. *Intermediate shaft*

Main Shaft, Shift Fork Shaft Assembly and Shift Drum

Separate gearbox housing, refer to *GEARBOX HOUSING* in this subsection.

See procedures in this subsection to remove:
- Pinion drive shaft
- Intermediate shaft
- Countershaft
- Reverse intermediate gear.

Remove main shaft assembly together with shift fork shaft assembly and shift drum.

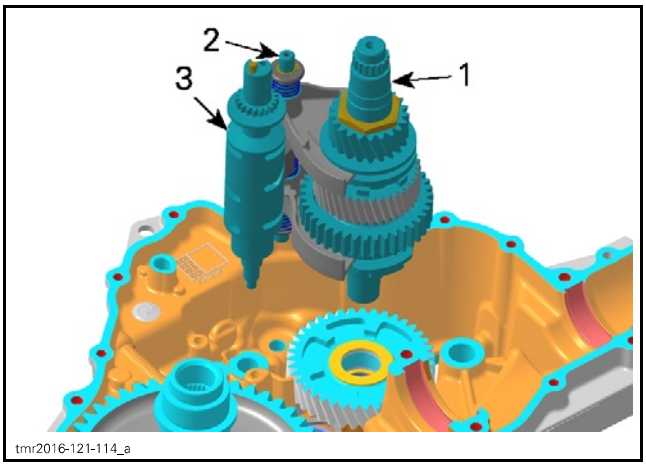

1. *Main shaft assembly*
2. *Shift fork shaft assembly*
3. *Shift drum*

Remove:
- LOW range gear
- Needle bearing
- Thrust washers.

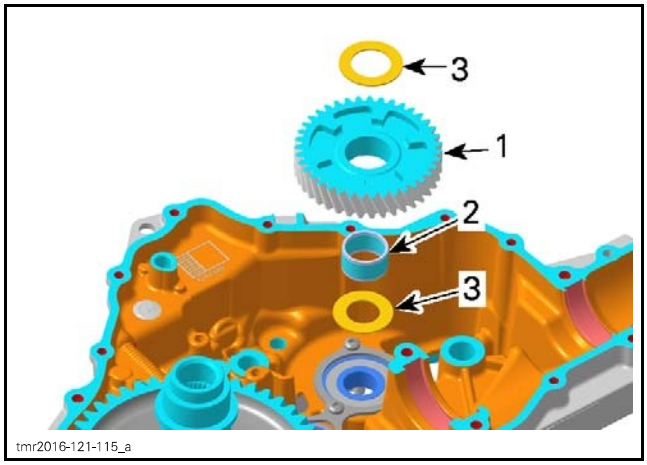

1. *Free pinion LOW range gear*
2. *Needle bearing*
3. *Thrust washer*

Disassembling the Shift Fork Shaft Assembly

NOTICE **Springs are not identical. Mark them to reinstall them in their original position.**

Remove:
- Snap rings (discard them)
- Spring seats
- Springs
- Shift forks
- Shifting block.

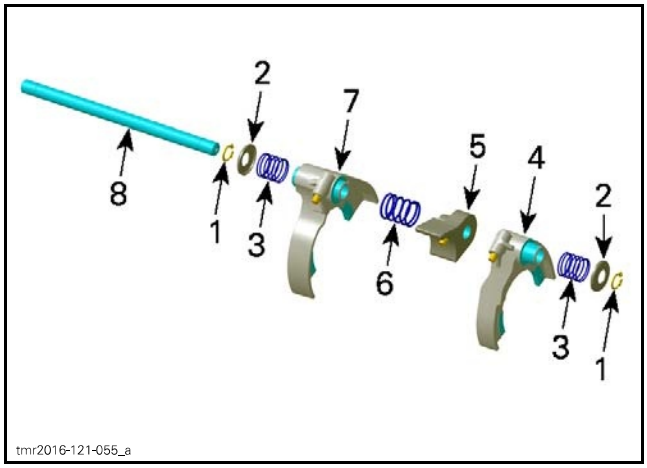

1. *Snap rings*
2. *Spring seat*
3. *Outer springs*
4. *Shift fork HIGH*
5. *Shifting block*
6. *Center spring*
7. *Shift fork LOW/REVERSE*
8. *Shift fork shaft*

Inspecting the Gearbox and Shifting Mechanism

Always verify for the following when inspecting gearbox components:
- Gear teeth damage
- Worn or scoured bearing surfaces

– Rounded engagement dogs and slots
– Worn shift fork engagement groove
– Worn splines on shafts and shifting sleeves.

Bearings

When gearbox is removed check gearbox ball bearings for contamination and/or metal shavings.

Check if ball bearings turn freely and smoothly. Replace if necessary, refer to *GEARBOX HOUSING* in this subsection.

Shifting Sleeves

Check shifting sleeves for worn inner splines and rounded or damaged engagement dogs.

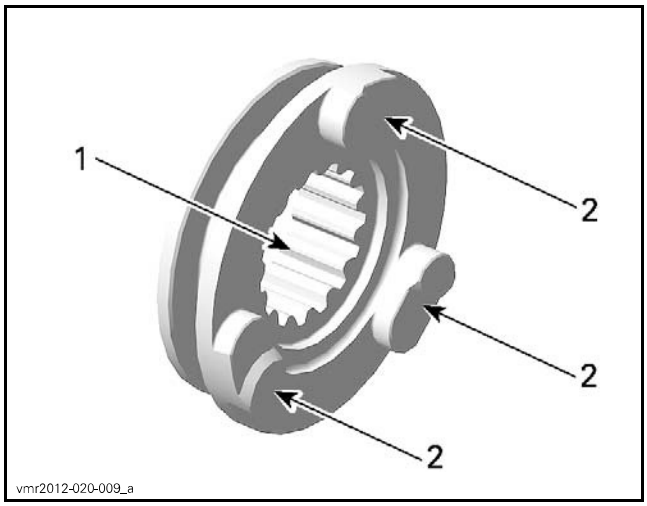

TYPICAL
1. Inner splines
2. Engagement dogs

Measure the width of shift fork engagement groove.

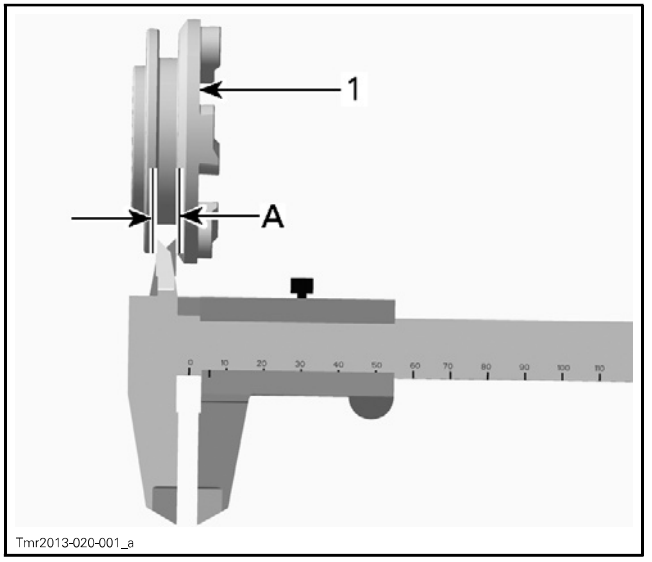

TYPICAL
1. Shifting sleeve
A. Width of shift fork engagement groove

WIDTH OF SHIFT FORK ENGAGEMENT GROOVE	
NEW	5.30 mm to 5.40 mm (.209 in to .213 in)
SERVICE LIMIT	5.50 mm (.217 in)

Shafts

Check bearing pin of reverse intermediate gear for wear.

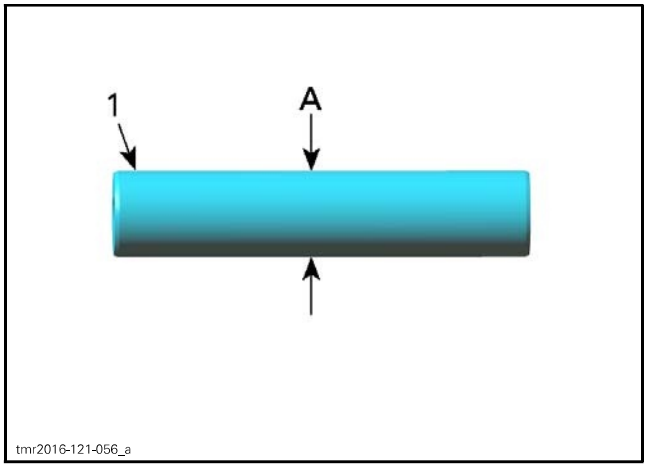

1. Bearing pin
A. Outer diameter

BEARING PIN OUTER DIAMETER	
NEW	24.987 mm to 25.000 mm (.9837 in to .9843 in)
SERVICE LIMIT	24.977 mm (.9833 in)

Check countershaft bearing journals for wear.

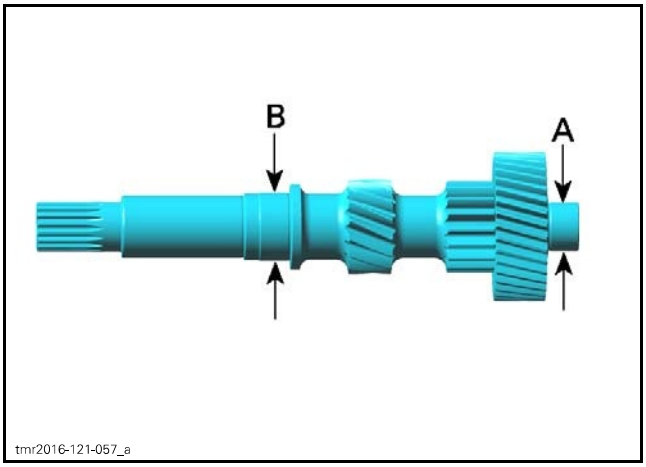

A. MAG side
B. Bearing journal CVT side

COUNTERSHAFT BEARING JOURNALS	
MAG SIDE	
NEW	19.977 mm to 19.990 mm (.7865 in to .787 in)
SERVICE LIMIT	19.973 mm (.7863 in)
CVT SIDE	
NEW	24.977 mm to 24.990 mm (.9833 in to .9839 in)
SERVICE LIMIT	24.970 mm (.9831 in)

Check main shaft for wear.

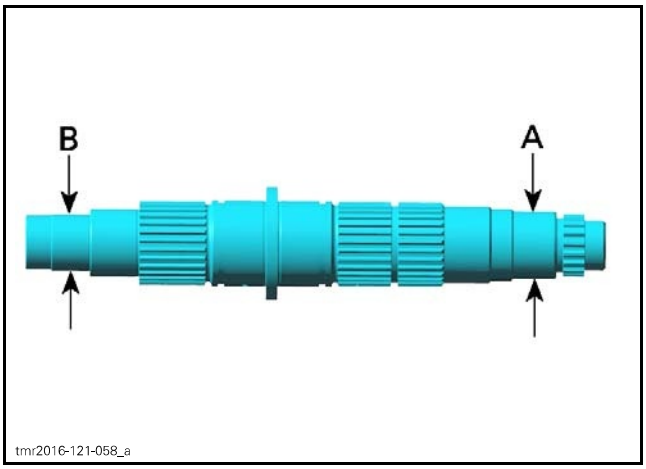

A. Bearing journal MAG side
B. Bearing journal CVT side

MAIN SHAFT BEARING JOURNAL CVT/MAG SIDE	
NEW	16.980 mm to 16.991 mm (.6685 in to .6689 in)
SERVICE LIMIT	16.976 mm (.6683 in)

Shift Shaft

Check shift shaft for worn splines and gears.

Check shift shaft spring for damages.

Shift Drum

NOTICE Do not disassemble shift drum.

Check shift drum tracks for scouring or heavy wear, like rounded engagement slots.

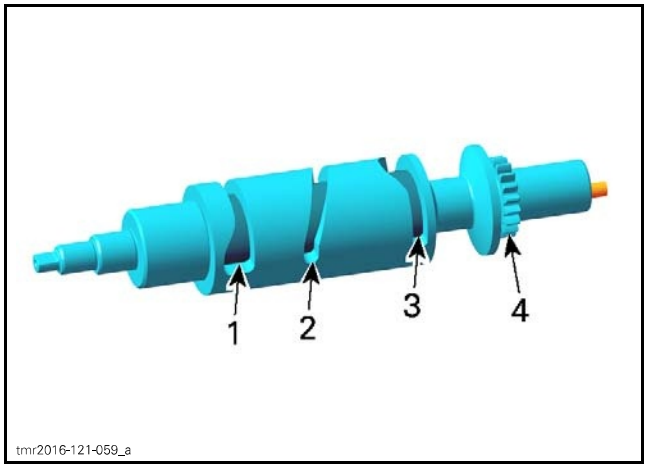

1. Track for the low/reverse range gear shift fork
2. Track for the shifting block
3. Track for the high range gear shift fork
4. Shift drum gear

Shift Forks

Check both shift forks for visible damage, wear or bent shift fork claws.

Check engagement rollers for wear and smooth movement.

Measure the shift fork claw thickness.

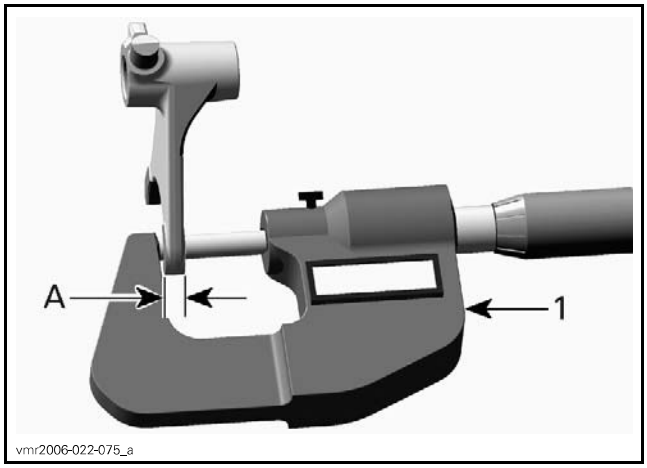

TYPICAL
1. Micrometer
A. Shift fork claw thickness

SHIFT FORK CLAW THICKNESS	
NEW	5.10 mm to 5.20 mm (.201 in to .205 in)
SERVICE LIMIT	5.00 mm (.197 in)

Shift Fork Shaft

Check shift fork shaft for visible damage or wear.

Check if shift fork shaft is straight.

Index Lever and Parking Lever

Index lever with roller must move freely.

Check parking lever for cracks or other damages.

Assembling the Gearbox and Shifting Mechanism

The assembly of gearbox is essentially the reverse of disassembly procedure. However, pay attention to the following details.

Prior to assembly lubricate ball bearing seats of:

– Main shaft
– Countershaft
– Intermediate shaft.

BALL BEARING SEATS LUBRICATION	
Service product	COPASLIP (P/N 420 297 430)

Assembling the Shift Fork Shaft Assembly

NOTICE Springs are not identical.

Install:

– NEW snap rings
– Spring seats
– Springs
– Shift forks
– Shifting block.

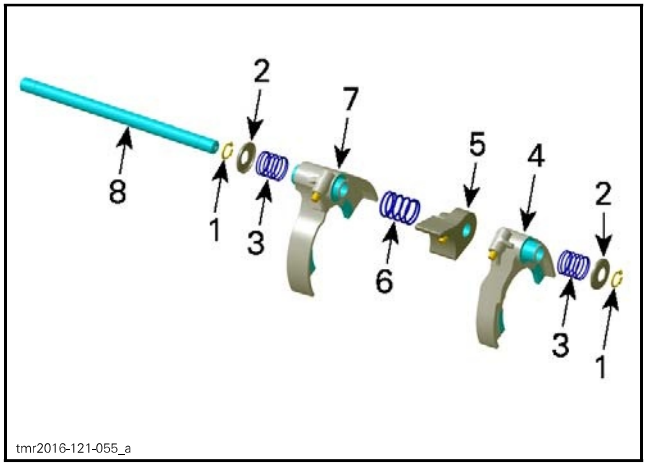

1. *Snap rings*
2. *Spring seat*
3. *Outer springs*
4. *Shift fork HIGH*
5. *Shifting block*
6. *Center spring*
7. *Shift fork LOW/REVERSE*
8. *Shift fork shaft*

Main Shaft, Shift Fork Shaft Assembly and Shift Drum

Install shifting sleeve, thrust washer and LOW gear pinion on main shaft assembly.

NOTE: Check if shifting sleeve engages correctly in reverse gear.

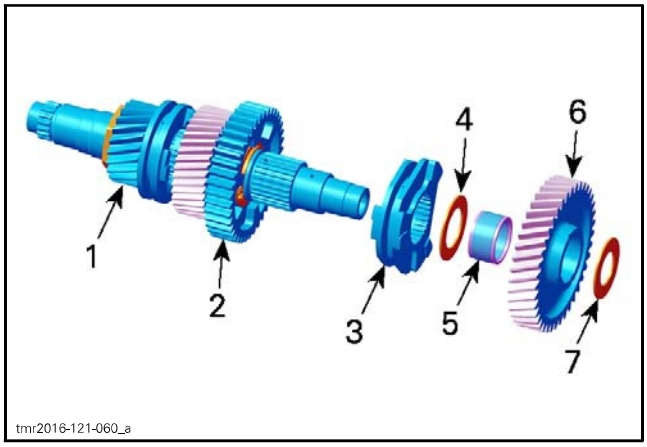

1. *Main shaft assembly*
2. *Reverse gear*
3. *Shifting sleeve*
4. *Thrust washer*
5. *Needle bearing*
6. *LOW gear pinion*
7. *Thrust washer*

Install shift fork shaft assembly, shift drum and main shaft assembly together into gearbox housing.

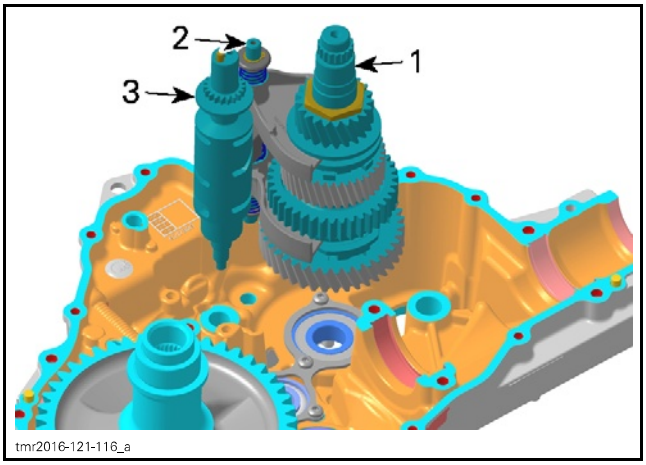

1. *Main shaft assembly*
2. *Shift fork shaft assembly*
3. *Shift drum*

Pinion Drive Shaft and Intermediate Shaft

Ensure distance shim and bevel gear are placed on the pinion drive shaft bearing in gearbox housing.

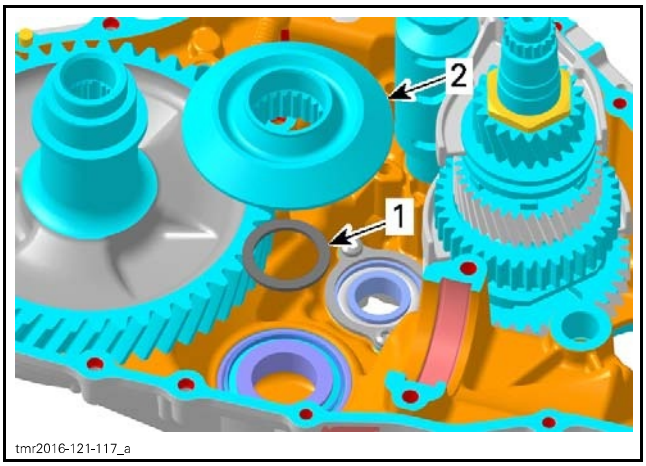

1. *Distance shim*
2. *Bevel gear*

Install:

1. Intermediate shaft
2. Pinion drive shaft.

Carefully fit pinion drive shaft into inner splines of bevel gear.

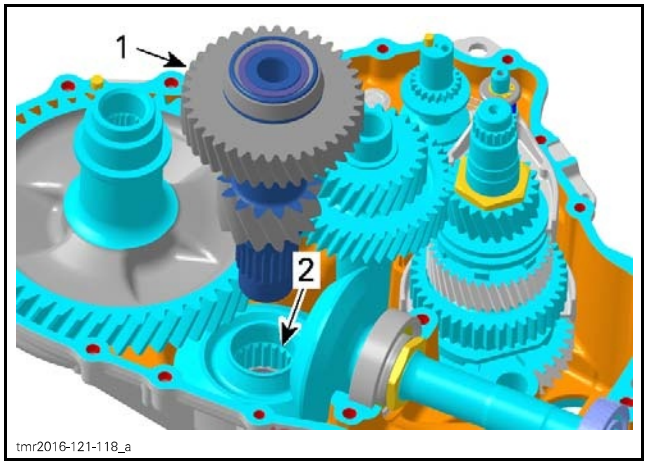

1. *Pinion drive shaft*
2. *Bevel gear splines*

Countershaft and Reverse Intermediate Gear

Install:

- Reverse intermediate gear
- Needle bearing
- Thrust washers
- Bearing pin.

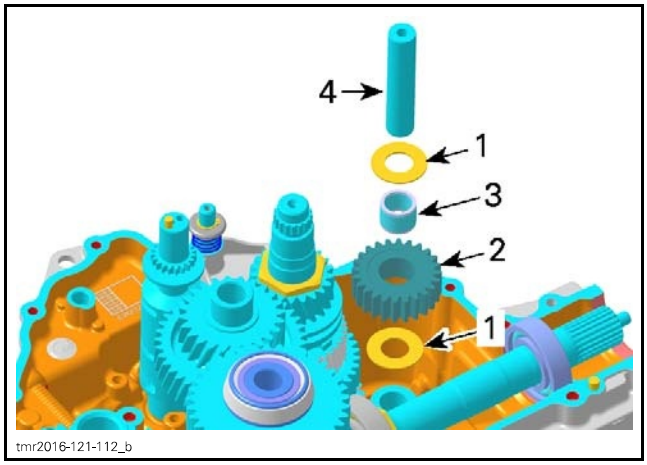

1. *Thrust washers*
2. *Reverse intermediate gear*
3. *Needle bearing*
4. *Bearing pin*

Install countershaft.

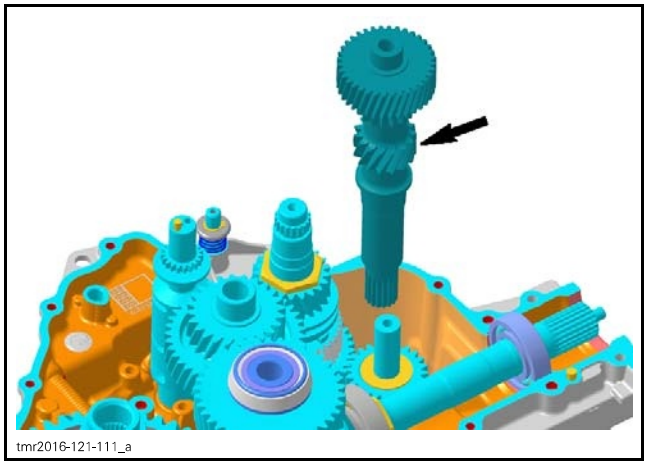
tmr2016-121-111_a

Shift Shaft Assembly

Install shift shaft assembly.

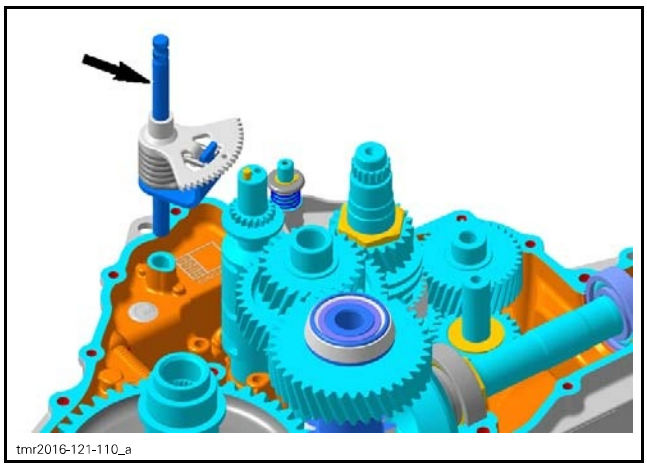
tmr2016-121-110_a

Align mark on shift shaft with marks on shift drum gear.

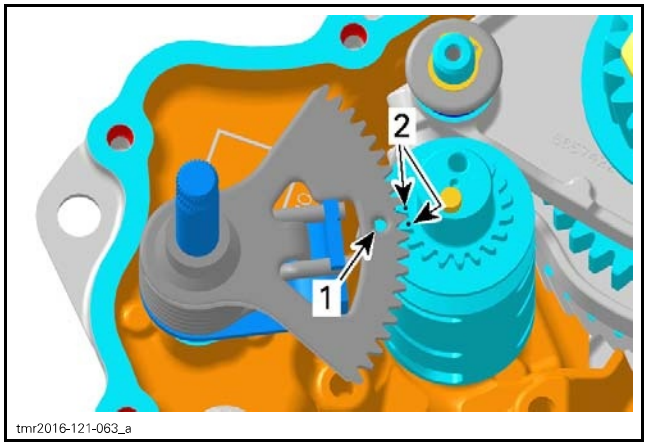

tmr2016-121-063_a

1. *Mark on shift shaft*
2. *Marks on shift drum gear*

Index Lever, Index Washer and Parking Lock Lever

Fit step ring into index lever.

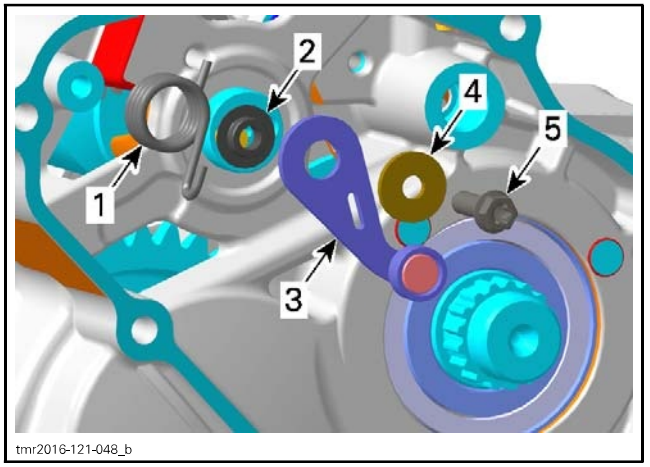

tmr2016-121-048_b

1. *Index spring*
2. *Step ring*
3. *Index lever*
4. *Washer*
5. *Screw*

TIGHTENING TORQUE	
Service product	LOCTITE 243 (BLUE) (P/N 293 800 060)
Index lever retaining screw	10 N•m ± 1 N•m (89 lbf•**in** ± 9 lbf•**in**)

Install index washer on shift drum.

Insert a flat screwdriver in the slot of the index lever, turn screwdriver clockwise and engage lever in index washer in NEUTRAL position as per following illustration.

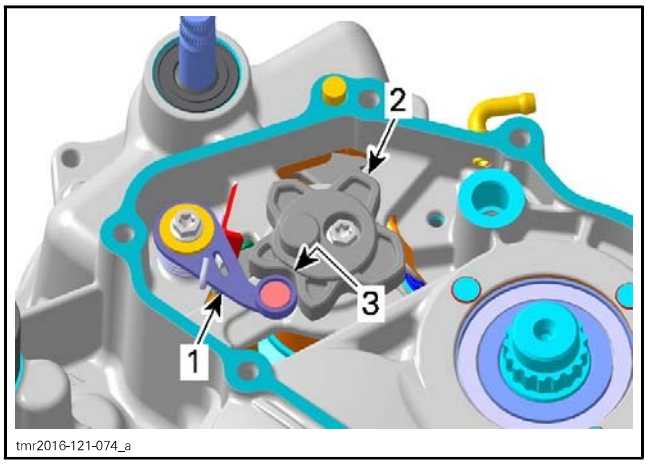

tmr2016-121-074_a

1. *Index lever*
2. *Index washer*
3. *Neutral position*

Install screw retaining the index washer to the shift drum.

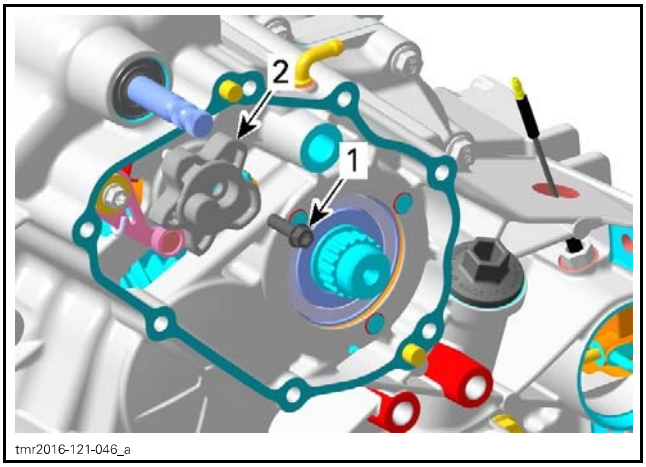

1. *Screw*
2. *Index washer*

TIGHTENING TORQUE	
Service product	LOCTITE 243 (BLUE) (P/N 293 800 060)
Index washer retaining screw	10 N•m ± 1 N•m (89 lbf•**in** ± 9 lbf•**in**)

Install:
- Park locking gear
- Spring washer
- Nut
- Pin
- Park locking lever.

Set gearbox to PARK position.

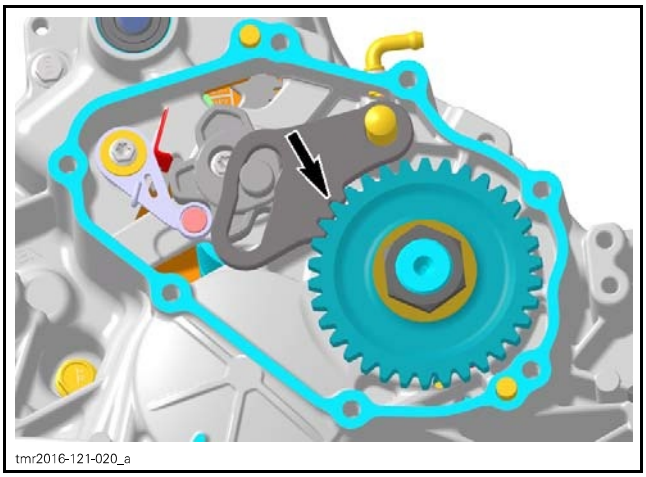

PARK LOCKING LEVER ENGAGED

Tighten nut to specification.

TIGHTENING TORQUE	
Service product	LOCTITE 648 (GREEN) (P/N 413 711 400)
Park locking gear nut	170 N•m ± 10 N•m (125 lbf•ft ± 7 lbf•ft)

Install gearbox cover with **NEW** gasket.

Tighten gearbox cover screws as per following sequence.

TIGHTENING TORQUE	
Gearbox cover screws	10 N•m ± 1 N•m (89 lbf•**in** ± 9 lbf•**in**)

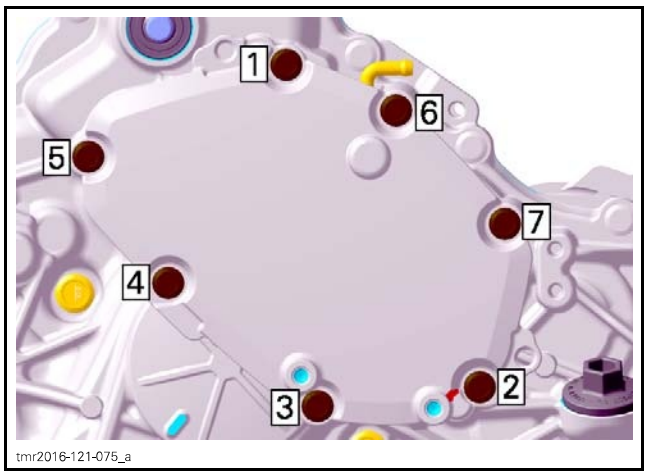

OUTPUT SHAFT AND 4X4 COUPLING MECHANISM

Removing the Output Shaft and 4X4 Coupling Mechanism

Drain gearbox oil. Refer to *REPLACING THE GEARBOX OIL* in *PERIODIC MAINTENANCE PROCEDURES* subsection.

Remove *4WD ACTUATOR*, refer to procedure in this subsection.

Detach *GEARBOX ASSEMBLY* from engine, refer to procedure in this subsection.

Remove:
- Screw
- Coupling fork shaft
- Coupling fork.

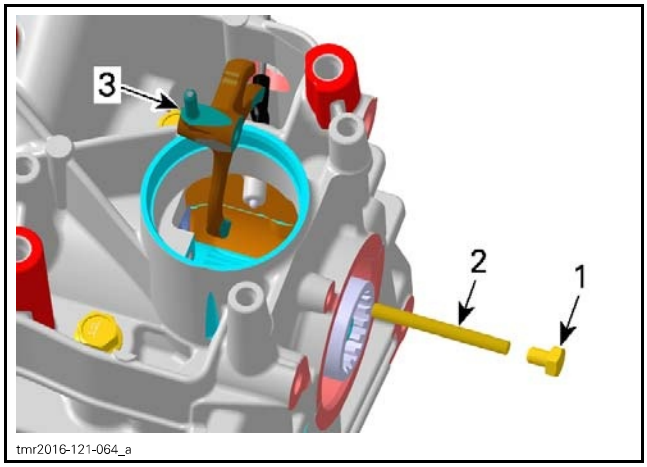

1. *Screw*
2. *Coupling fork shaft*
3. *Coupling fork*

Pull out 4X4 coupling sleeve.

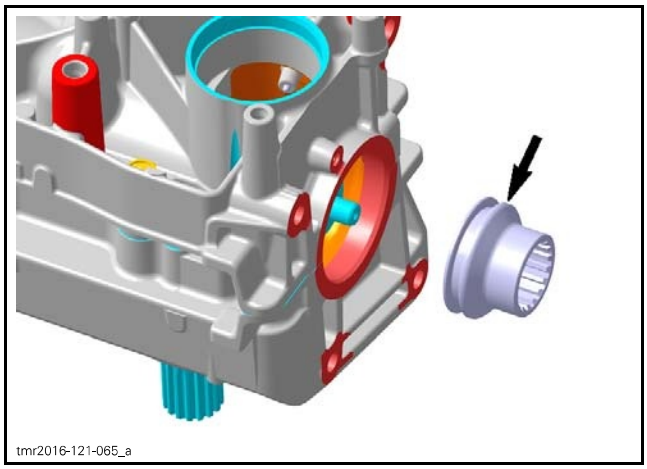

Inspecting the Output Shaft and 4X4 Coupling Mechanism

Output Shaft

Check output shaft and its gear for cracks, bend, pitting or other visible damages.

Check output shaft splines for wear or other damages.

Check if the output shaft bearings turn freely and smoothly.

Replace oil seal if brittle, hard or damaged.

4X4 Coupling Sleeve

Check splines of coupling sleeve for wear or other damages.

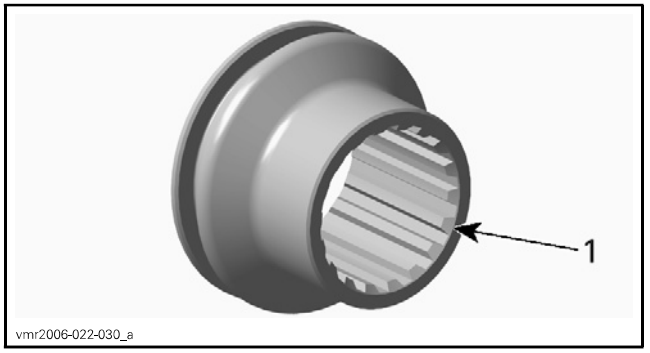

1. *Inspect splines*

Measure the coupling sleeve groove width.

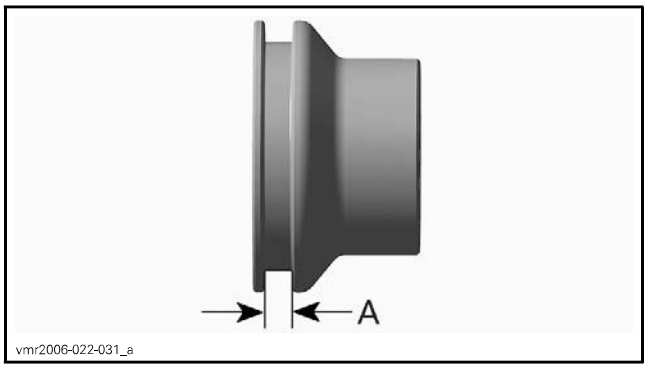

A. *Groove width*

COUPLING SLEEVE GROOVE WIDTH	
NEW	5.25 mm to 5.35 mm (.207 in to .211 in)
SERVICE LIMIT	5.50 mm (.217 in)

Coupling Fork

Check coupling fork for visible damage, wear or bent coupling fork claws.

Check coupling fork claw thickness.

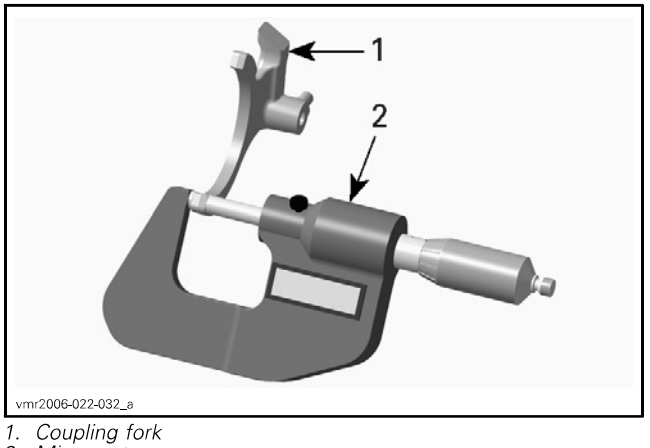

1. *Coupling fork*
2. *Micrometer*

COUPLING FORK CLAW THICKNESS	
NEW	4.95 mm to 5.05 mm (.195 in to .199 in)
SERVICE LIMIT	4.80 mm (.189 in)

Installing the Output Shaft and 4X4 Coupling Mechanism

Install coupling sleeve onto the output shaft.

Install:

– Coupling fork
– Coupling fork shaft
– Screw.

Ensure that coupling fork engages into the coupling sleeve groove.

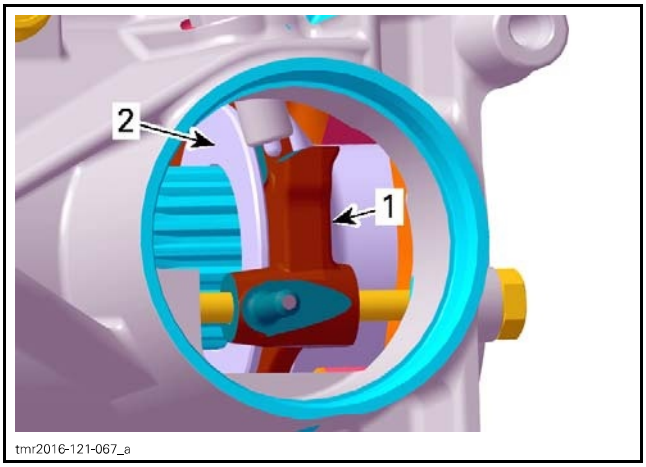

1. Coupling fork
2. Coupling sleeve

TIGHTENING TORQUE	
Service product	LOCTITE 243 (BLUE) (P/N 293 800 060)
Coupling fork shaft screw	6 N•m ± 0.7 N•m (53 lbf•**in** ± 6 lbf•**in**)

DRIVE GEAR

Removing the Drive Gear

Separate gearbox housing, refer to *GEARBOX HOUSING* in this subsection.

Remove drive gear.

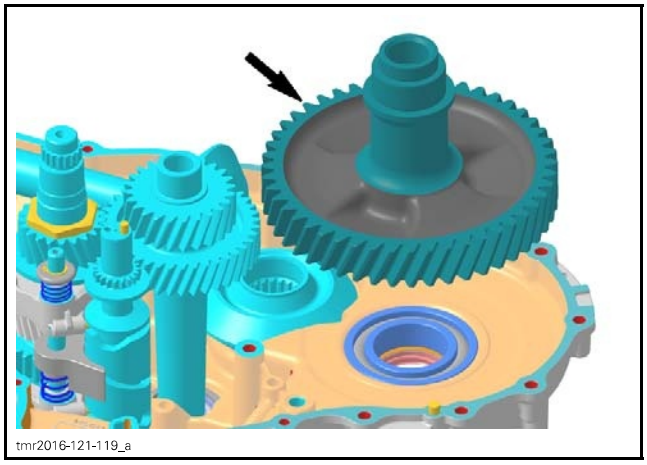

Installing the Drive Gear

Install drive gear.

REQUIRED TOOL	
OIL SEAL GUIDE (P/N 529 036 433)	

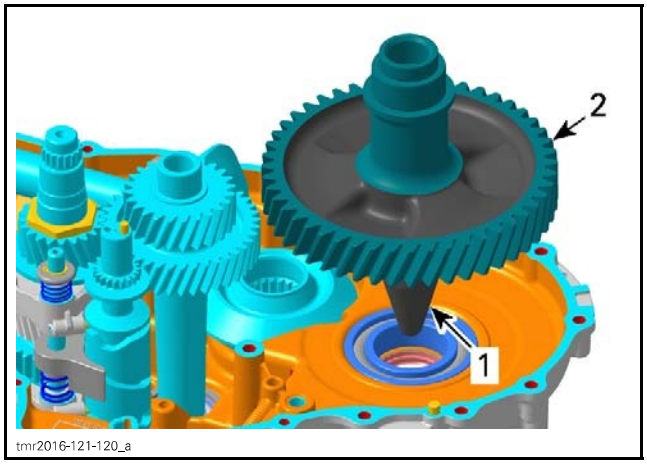

1. Oil seal guide
2. Drive gear

SHIFTER

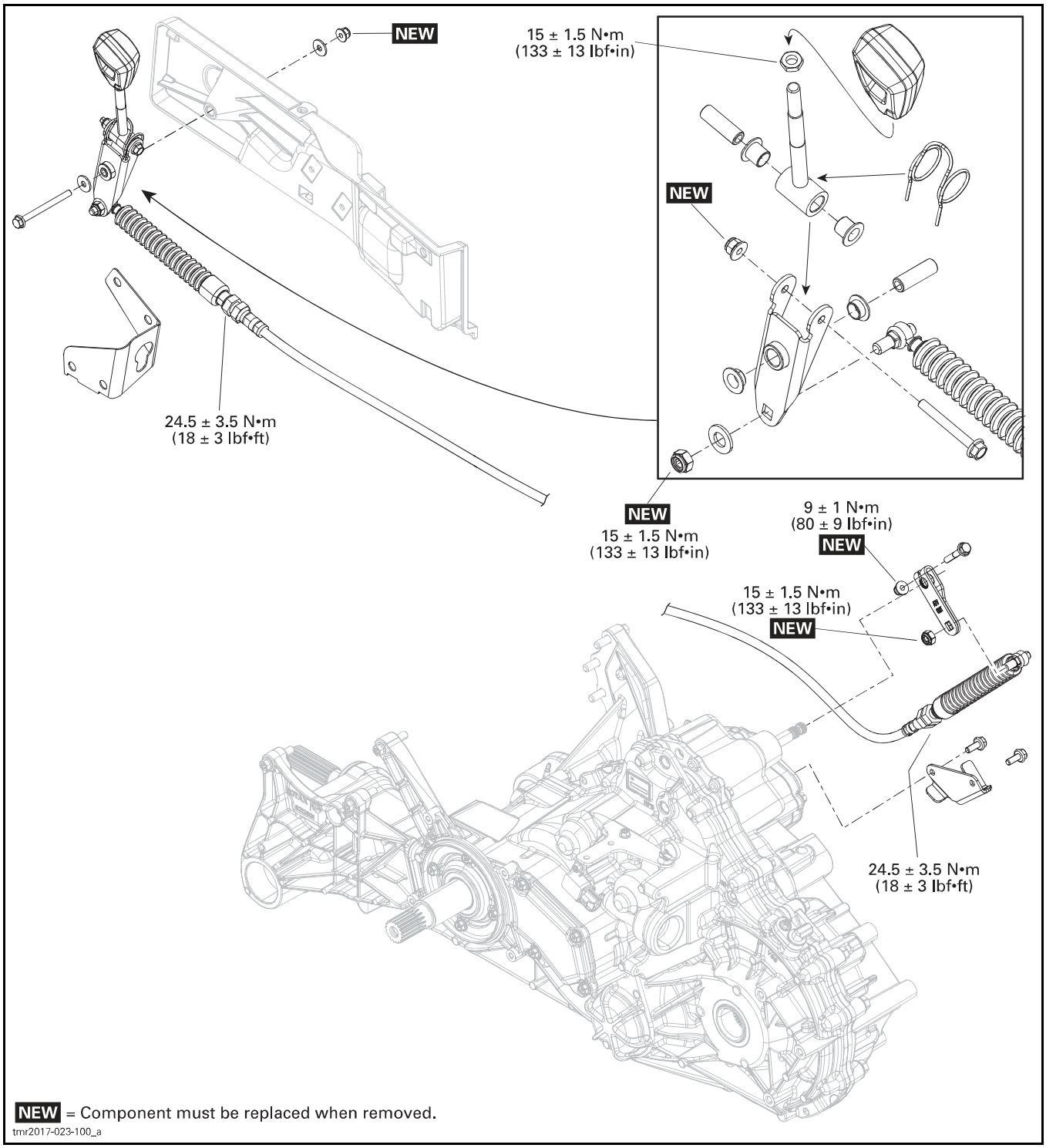
NEW
15 ± 1.5 N•m
(133 ± 13 lbf•in)
NEW
24.5 ± 3.5 N•m
(18 ± 3 lbf•ft)
NEW
15 ± 1.5 N•m
(133 ± 13 lbf•in)
9 ± 1 N•m
(80 ± 9 lbf•in)
NEW
15 ± 1.5 N•m
(133 ± 13 lbf•in)
NEW
24.5 ± 3.5 N•m
(18 ± 3 lbf•ft)
NEW = Component must be replaced when removed.
tmr2017-023-100_a

PROCEDURES

SHIFT LEVER

Removing the Shift Lever

1. Remove the shifter indicator. Refer to *BODY* subsection.
2. Place shift lever in **NEUTRAL** position.
3. Secure vehicle using wheel blocks.
4. Unscrew shift lever handle.

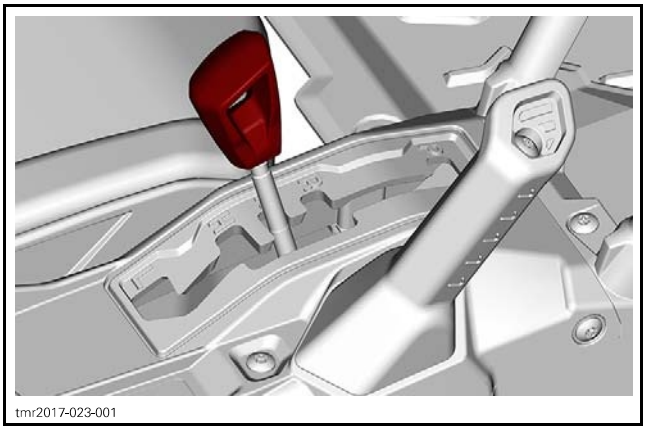
tmr2017-023-001

5. Remove the console. Refer to *BODY* subsection.

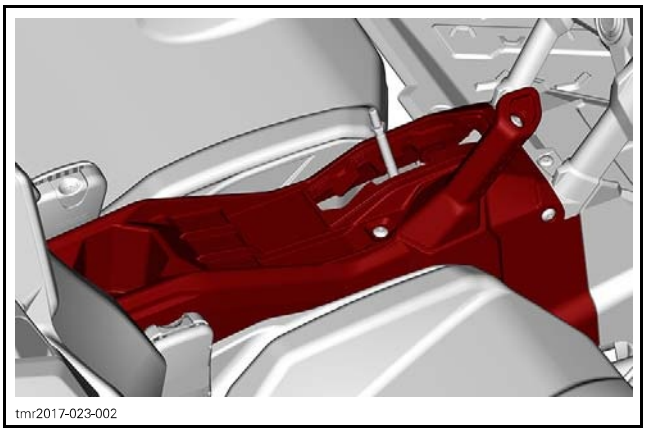
tmr2017-023-002

6. Detach shifter cable from shift lever.
7. Remove shift lever pivot bolt and nut.

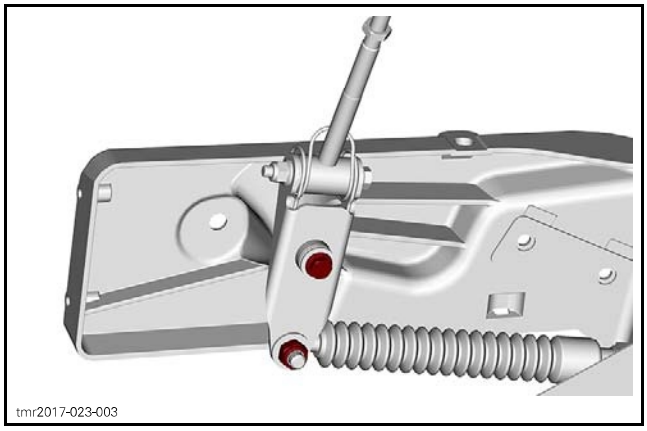
tmr2017-023-003

8. Remove shift lever.

Inspecting the Shift Lever

Check shift lever for bending or cracks.

Check spring and bushing condition.

Replace all damaged parts.

Installing the Shift Lever

The installation is the reverse of the removal procedure. However, pay attention to the following.

Tighten shift lever handle nut to specification.

TIGHTENING TORQUE	
Shift lever handle Nut	15.5 N•m ± 1.5 N•m (137 lbf•**in** ± 13 lbf•**in**)

Adjust shifter cable, refer to *ADJUSTING THE SHIFTER CABLE* in this subsection.

Check if shift lever works properly in all positions.

SHIFTER CABLE

Adjusting the Shifter Cable

1. Place shift lever in **NEUTRAL** position.

NOTICE **Move vehicle back and forth to ensure gearbox is set in neutral position.**

2. Secure vehicle using wheel blocks.
3. Loosen cable adjustment nuts at engine end of cable.

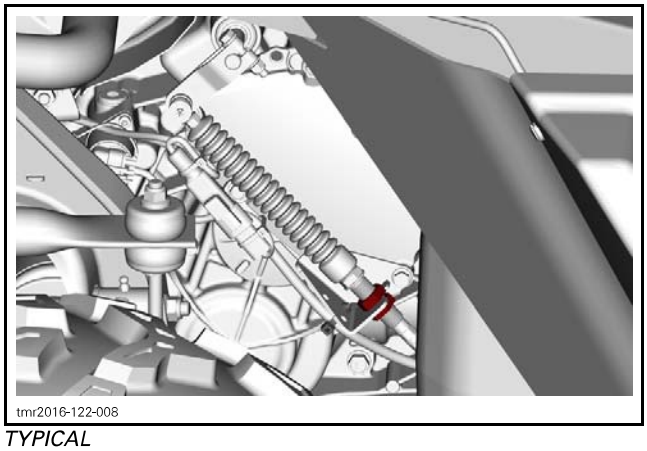

TYPICAL

4. Adjust cable nuts in order to center shift lever in neutral notch.

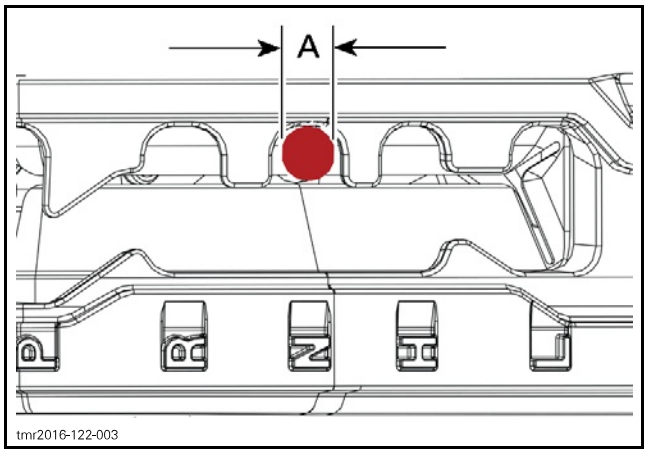

TYPICAL - CORRECT ADJUSTMENT
A. Shift lever centered in neutral notch

NOTE: UP and DOWN shifter arm freeplay must be symmetrical about the center line of neutral gate.

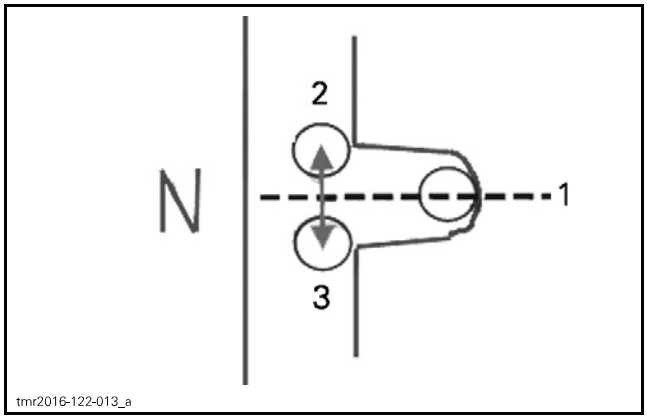

1. *Center line*
2. *UP side of center line*
3. *DOWN side of center line*

5. Tighten cable adjustment nuts to specification.

TIGHTENING TORQUE	
Adjustment nuts	24.5 N•m ± 3.5 N•m (18 lbf•ft ± 3 lbf•ft)

6. Move shift lever in R position then in H position.
7. Place shift lever in NEUTRAL position.
8. Check if shift lever is properly centered in neutral notch. Readjust as required.

NOTE: To properly check shift lever alignment into notch, move shift lever toward the LH side then let it return to position.

9. Test the shifter to confirm that the system works properly in all positions.

⚠ WARNING

After adjustment, make sure that PARK position works properly.

SHIFT PLATE

Removing the Shift Plate

NOTE: Do not remove shift plate needlessly.

1. Remove shifter cable from shift plate.

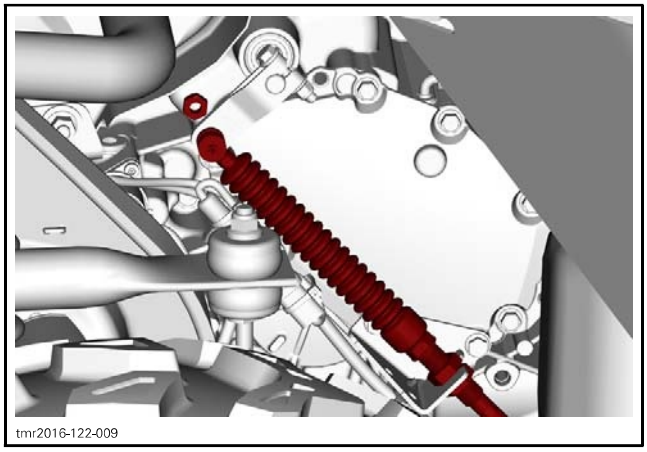

2. Index shift plate and shift shaft.

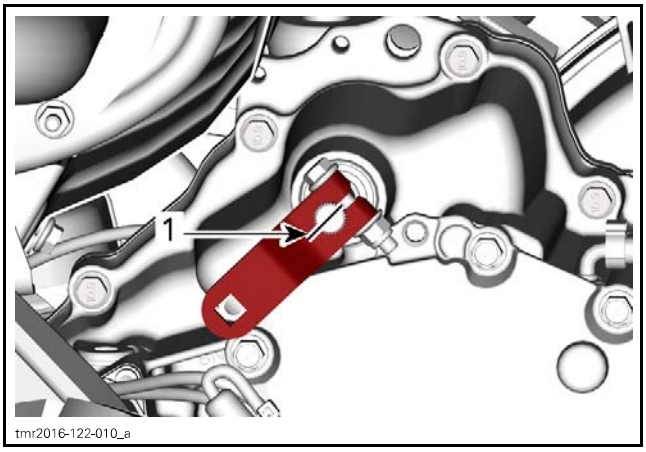

TYPICAL
1. Trace a mark on both parts

3. Remove shift plate nut and bolt.

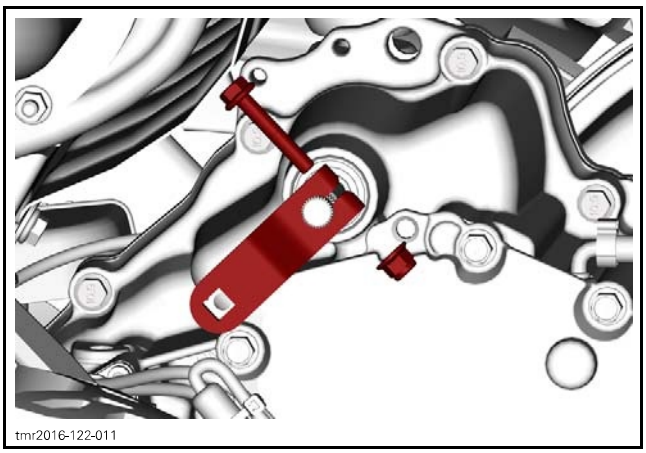

4. Remove shift plate.

Inspecting the Shift Plate

Check shift plate for:
- Cracks
- Bending
- Spline condition.

Installing the Shift Plate

The installation is the reverse of the removal procedure. However, pay attention to the following.

Place gearbox in **NEUTRAL** position before shift plate installation.

Install and align shift plate using marks previously traced.

If shift plate is installed on a new engine, adjust it as per the following illustration.

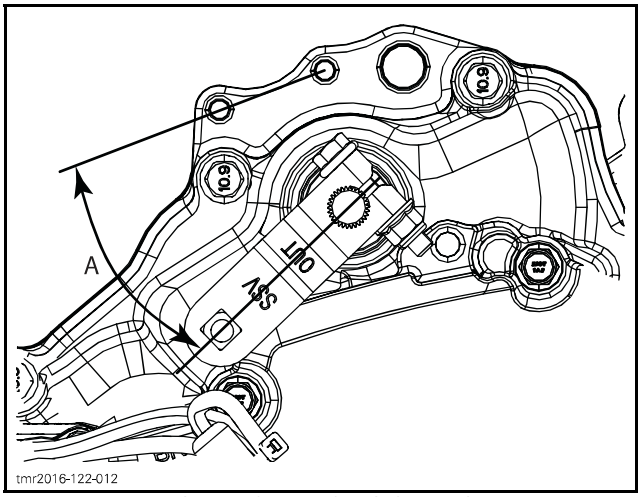

SHIFT PLATE ANGLE FROM 2 HOLES ON ENGINE
A. 23° ± 2.5°

Adjust shifter cable, refer to *SHIFTER CABLE ADJUSTMENT* in this subsection.

Tighten shift plate nut to specification.

TIGHTENING TORQUE	
Shift plate nut	9 N•m ± 1 N•m (80 lbf•**in** ± 9 lbf•**in**)

TURBO CHARGER AND INTERCOOLER

SERVICE TOOLS

Description	Part Number	Page
ENGINE LEAK DOWN TEST KIT	529 035 661	14
SMALL HOSE PINCHER	295 000 076	12
TURBO TEST KIT	529 036 321	14
VACUUM/PRESSURE PUMP	529 021 800	16, 18

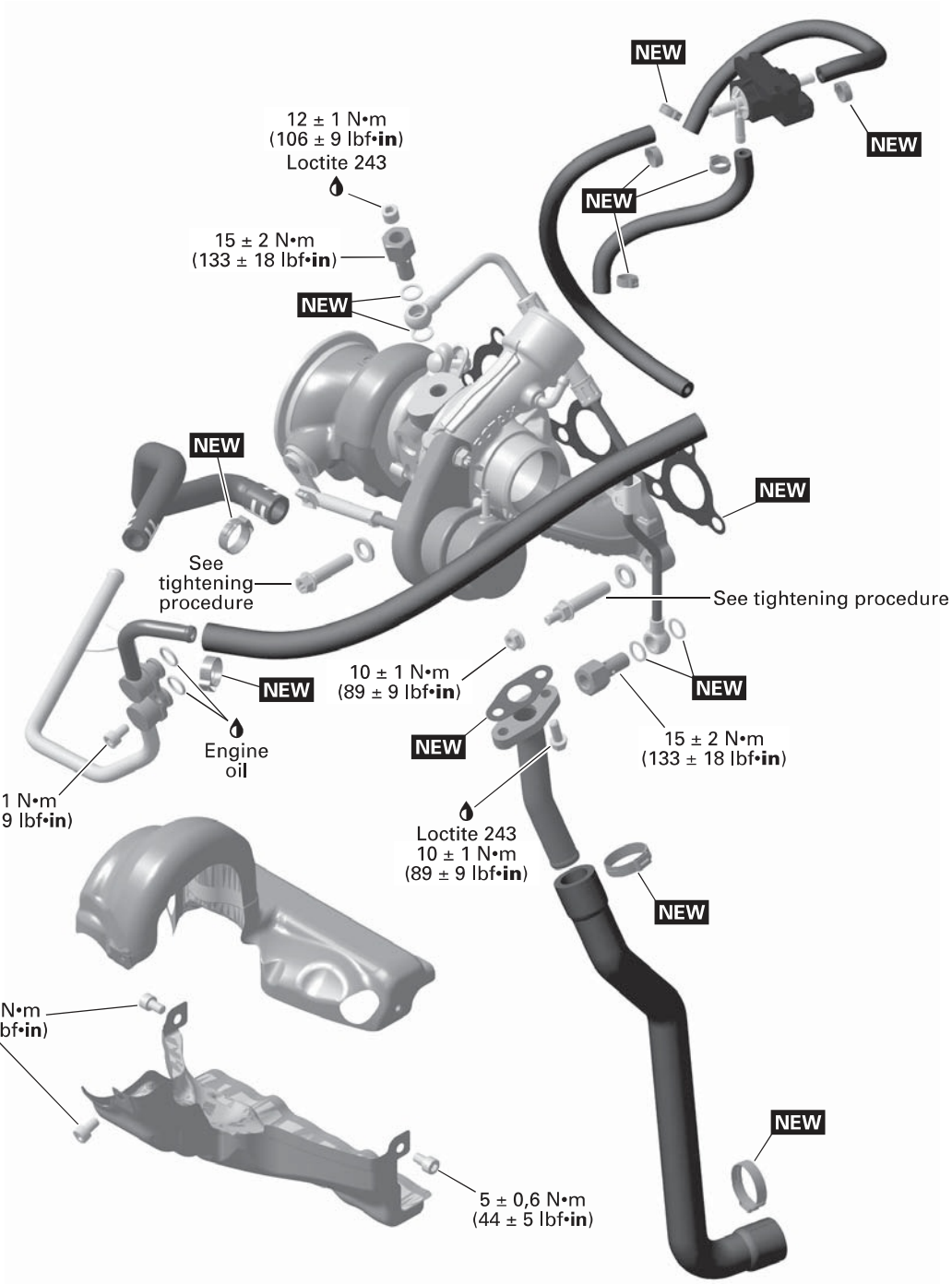

NEW = Component must be replaced when removed.

tmr2017-024-001_a

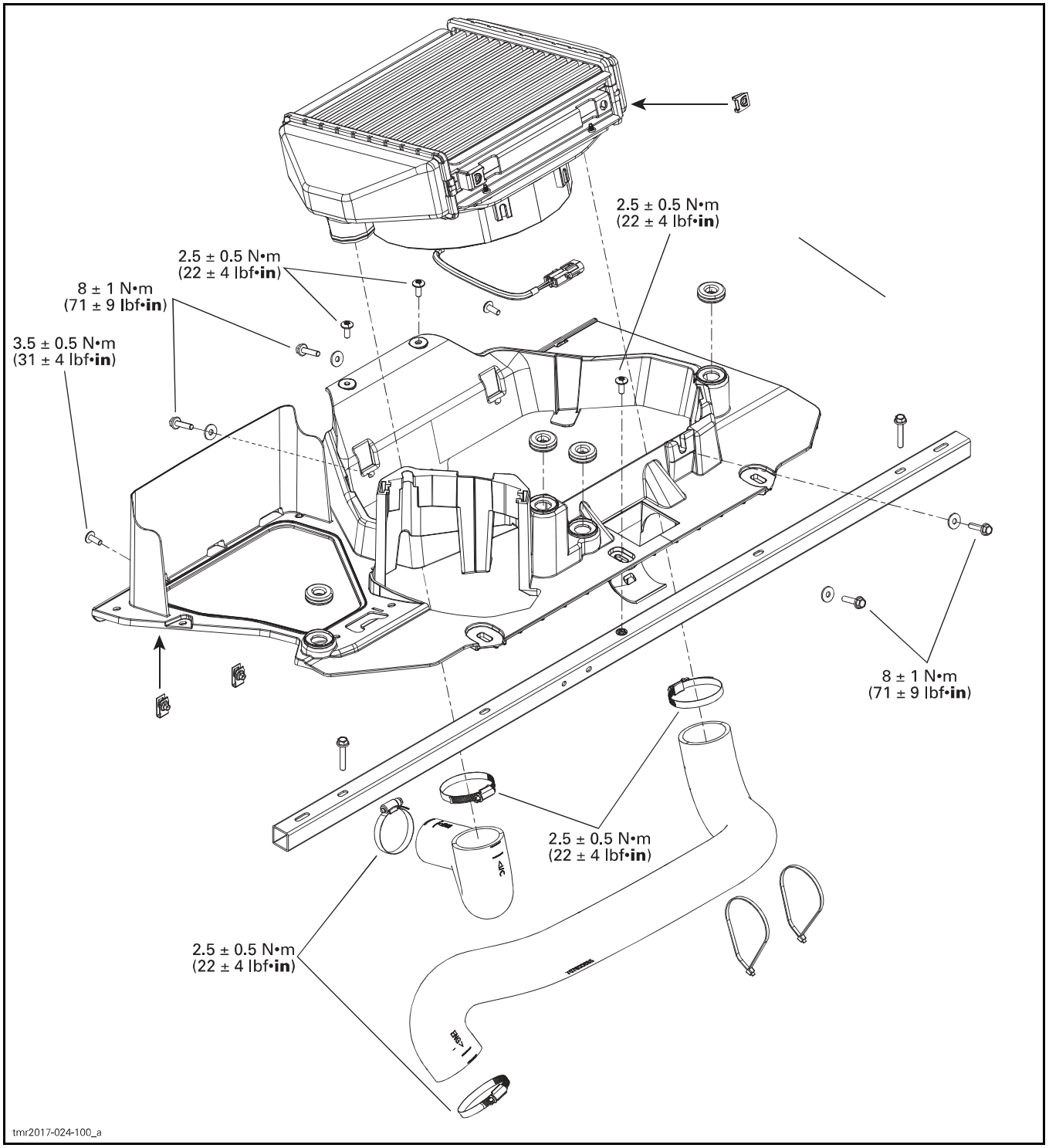
2.5 ± 0.5 N•m
(22 ± 4 lbf•in)
2.5 ± 0.5 N•m
(22 ± 4 lbf•in)
8 ± 1 N•m
(71 ± 9 lbf•in)
3.5 ± 0.5 N•m
(31 ± 4 lbf•in)
8 ± 1 N•m
(71 ± 9 lbf•in)
2.5 ± 0.5 N•m
(22 ± 4 lbf•in)
2.5 ± 0.5 N•m
(22 ± 4 lbf•in)
tmr2017-024-100_a

GENERAL

TURBO CHARGER

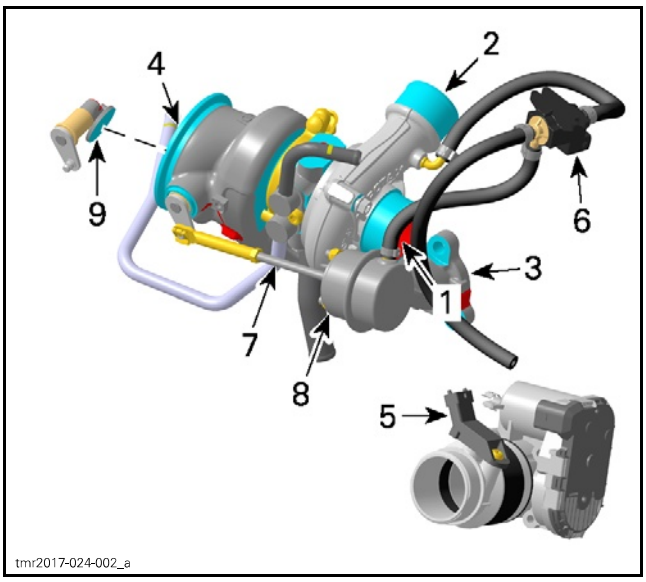

1. *Compressor inlet*
2. *Compressor outlet*
3. *Turbine inlet*
4. *Turbine outlet*
5. *Pressure Upstream Throttle Sensor (PUTS)*
6. *Boost Control Valve (BCV)*
7. *Waste gate actuator rod*
8. *Actuator rod spring*
9. *Waste gate*

Turbine

The exhaust gases cause the turbine wheel to spin and accelerate. The gases then exit through the turbine outlet towards the mufflers.

The turbine wheel drives the compressor wheel through the rotor shaft. When the turbine wheel is spinning, the compressor wheel is spinning at the same speed.

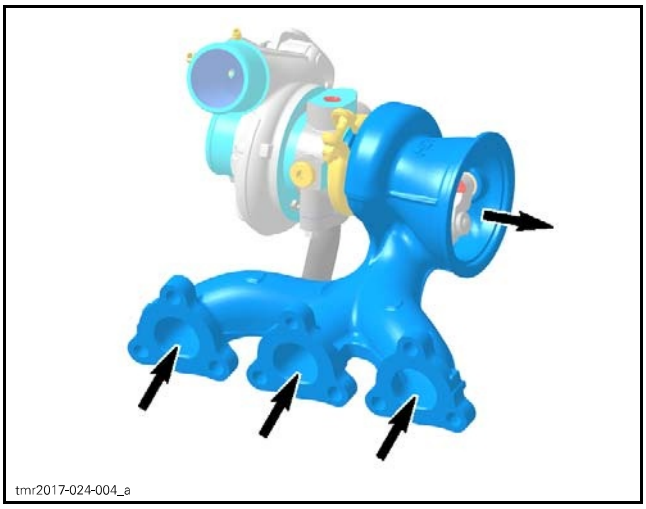

Compressor

The compressor wheel spinning causes filtered air to enter through the compressor inlet. The air is then compressed and exits through the compressor outlet.

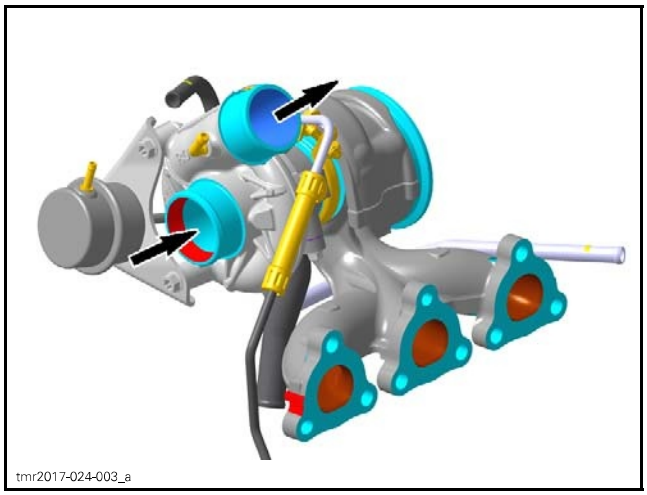

Pressure Upstream Throttle Sensor (PUTS)

To ensure optimal engine operation in all conditions, the ECM system requires 2 pressure sensors: The PUTS and the MAPS. The PUTS measures the air pressure upstream the throttle plate and the MAPS measures the pressure downstream the throttle plate.

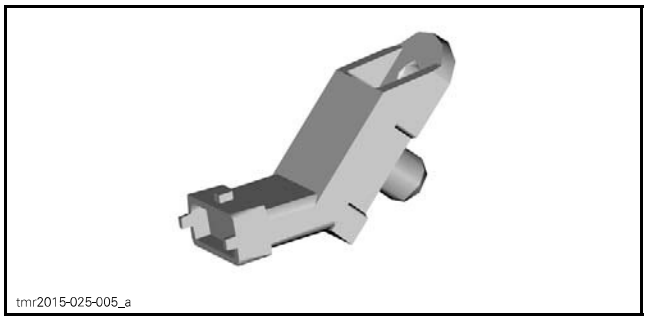

Refer to *ELECTRONIC FUEL INJECTION (EFI)* subsection for testing and replacement.

Boost Control Valve (BCV)

The BCV controls the pressure acting on the waste gate actuator rod spring. The ECM uses pulse width modulation to control the BCV.

If too high boost pressure is measured by the PUTS, the ECM will control the BCV and open the waste gate when the actuation pressure has been reached.

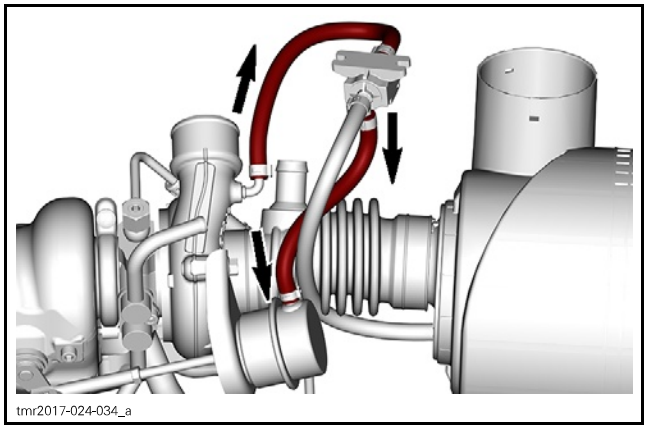

Excess pressure may also be returned to the intake hose before the compressor inlet.

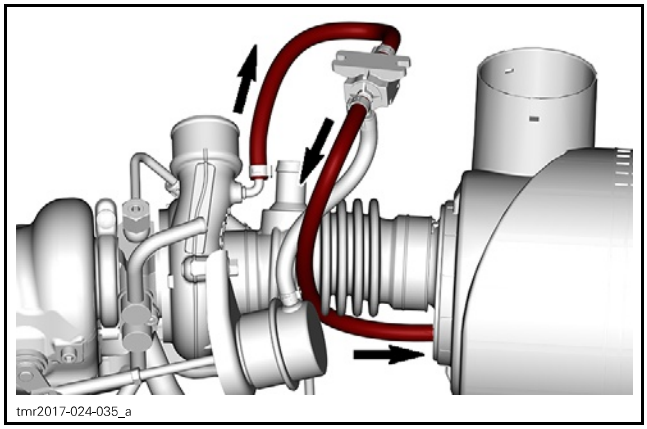

NOTE: A BCV malfunction will activate Limp Home Mode.

Refer to *ELECTRONIC FUEL INJECTION (EFI)* subsection for testing and replacement.

Waste Gate Actuator Rod and Spring

When the BCV allows compressed air to enter the waste gate actuator, the actuator rod will move to open the waste gate.

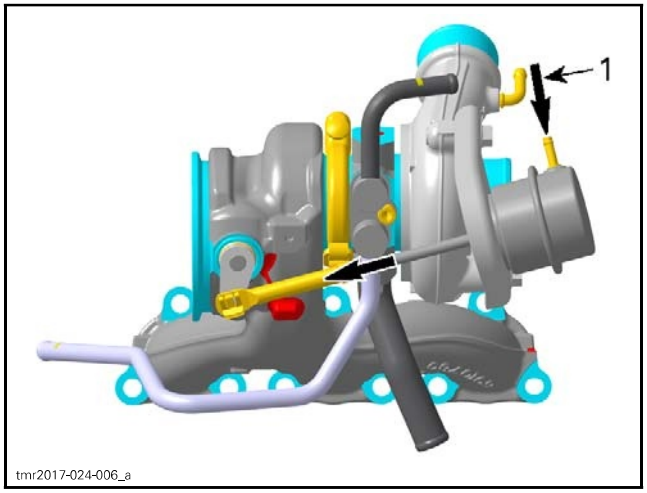

WASTE GATE OPENS
1. Compressed air

When the air pressure inside the actuator drops, the spring will return the actuator rod to its initial position and close the waste gate.

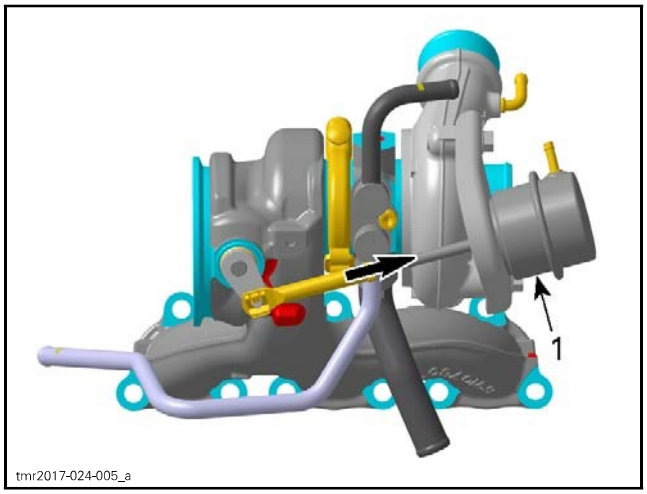

WASTE GATE CLOSES
1. Compression spring inside actuator

Waste Gate

The waste gate regulates turbine speed by allowing exhaust gas to bypass the turbine.

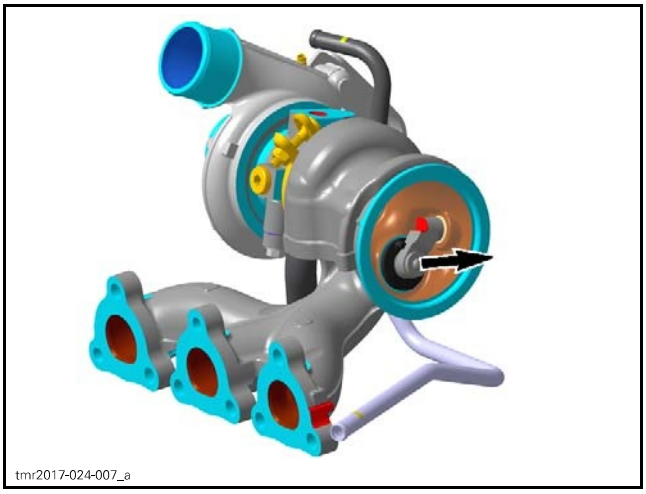
tmr2017-024-007_a

INTERCOOLER

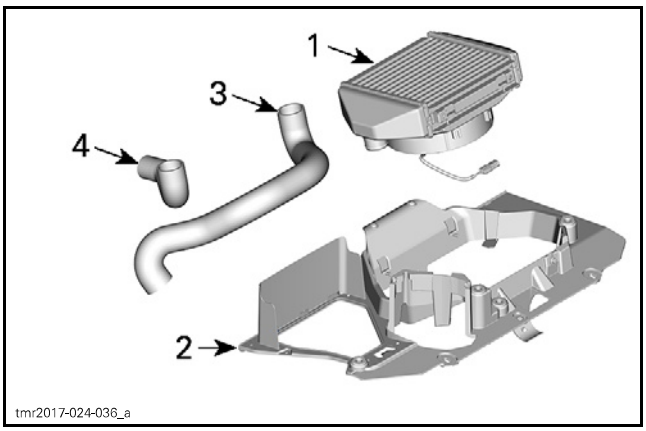

tmr2017-024-036_a

1. *Intercooler*
2. *Shroud*
3. *Air outlet hose*
4. *Air inlet hose*

An exhaust gas turbocharger heats the air that it compresses.

The intercooler cools the hot compressed air from the compressor outlet.

ADJUSTMENT

WASTE GATE

Factory adjusted. Do not try to adjust the waste gate.

WASTE GATE ACTUATOR ROD

Factory adjusted. Do not try to adjust the waste gate actuator rod.

MAINTENANCE

The turbo charger is maintenance free. However it is susceptible to damage caused by failures from other systems. Refer to *TROUBLE SHOOTING* in this subsection.

NOTICE If particles are suspected of entering the exhaust system, take the proper actions to remove them.

NOTICE Never operate engine without an air filter.

NOTICE Engine oil change intervals and procedure must be respected.

Air filter replacement should be adjusted according to riding conditions as it is critical to ensure proper engine performance and life span.

Air filter replacement frequency must be increased for the following dusty conditions:

– Riding on dry sand
– Riding on dry dirt covered surfaces
– Riding on dry gravel roads or similar conditions.

NOTE: Riding in a group in these conditions would increase even more the air filter replacement requirement.

For air filter replacement refer to *PERIODIC MAINTENANCE PROCEDURES* subsection.

PRECAUTIONS

Engine Warming and Cooling

Allow the vehicle to reach operating temperature before placing high demand on the engine. This allows oil to reach the correct viscosity to properly lubricate the turbo.

Allow the vehicle to idle for 2 minutes before turning it off. This will allow the lubrication system to gradually cool the turbo.

TROUBLESHOOTING

LACK OF POWER

1. Cold start
   - *Allow vehicle to reach operating temperature up for turbo to be at maximum efficiency.*
2. Clogged air filter.
   - *Check air filter. Refer to PERIODIC MAINTENANCE PROCEDURES subsection.*
3. Intake system collapsed, restricted or leaking.
   - *Check tightness of clamps and screws.*
   - *Damaged or missing gaskets.*
   - *Check for foreign object between air filter and turbo charger.*
   - *Inspect parts for damage, cracks or obstructions. Repair or replace. Refer to AIR INTAKE SYSTEM and INTAKE MANIFOLD subsection.*
4. Exhaust system collapsed, restricted or leaking.
   - *Check if the exhaust system is blocked or damaged. Replace parts as necessary. Refer to EXHAUST SYSTEM subsection.*
   - *Check exhaust manifold for cracks, blown or missing gaskets. Replace parts as necessary. Refer to EXHAUST SYSTEM subsection.*
   - *Check for foreign object in the exhaust system.*
5. Fuel pump malfunction.
   - *Perform a fuel pump pressure test and check fuel pump. Refer to FUEL TANK AND FUEL PUMP subsection.*
6. Sensor or injector malfunction.
   - *Check fault codes with B.U.D.S. system. Refer ENGINE MANAGEMENT SYSTEM subsection.*
   - *Check fuel injection system is in good condition and correctly adjusted. Refer to ELECTRONIC FUEL INJECTION (EFI) subsection.*
   - *Check Boost Pressure Sensor (PUTS). Refer to ELECTRONIC FUEL INJECTION (EFI) subsection.*
   - *Check Turbo Control Valve (BCV) function and for correct installation. Refer to ELECTRONIC FUEL INJECTION (EFI) subsection.*
7. Engine damage or malfunction.
   - *Check for proper valve timing. Refer to TIMING CHAIN subsection.*
   - *Perform engine leak test. Refer to TOP END subsection.*
8. Waste gate malfunction.
   - *Check waste gate actuator. Refer to procedure in this subsection.*
   - *Check waste gate for smooth movement.*
   - *Check Turbo Control Valve (BCV) function and for correct installation. Refer to ELECTRONIC FUEL INJECTION (EFI) subsection.*
9. Intercooler malfunction.
   - *Check if intercooler is clogged or contaminated.*
   - *Check for correct intercooler fan electric connection (direction of rotation).*
10. Turbo charger blocked or damaged.
    - *Check for excessive carbon build up on housing.*
    - *Check for rotor radial clearance.*
    - *Check if rotor shaft bearing is worn out.*
    - *Check turbo charger housing if damaged or restricted.*

NOISY PERFORMANCE

1. Support brackets, turbo charger flanges or clamps are loose.
   - *Check tightness of clamps and screws.*
   - *Check if support brackets and parts connected to the turbo charger are not loose or damaged.*
2. Foreign object in intake or exhaust system.
   - *Check and clean intake and/or exhaust system.*
3. Intake system collapsed, restricted or leaking.
   - *Check tightness of clamps and screws.*
   - *Inspect parts for damage, cracks or obstructions.*
   - *Check for damaged or missing gaskets.*
4. Exhaust system collapsed, restricted or leaking.
   - *Check tightness of clamps and screws.*
   - *Inspect parts for damage, cracks or obstructions.*
   - *Check for damaged or missing gaskets.*
5. Turbo charger blocked or damaged.
   - *Check for excessive carbon build up on housing.*
   - *Check for imbalance due to damaged or broken rotor blades.*
   - *Check turbo charger housing if damaged or restricted.*
   - *Check for rotor radial clearance.*
   - *Check if rotor shaft bearing is worn out.*

BLUE SMOKE AND/OR OIL CONSUMPTION

1. Clogged air filter.
   - *Inspect air filter. Refer to PERIODIC MAINTENANCE PROCEDURES subsection.*
2. Intake system collapsed, restricted or leaking.
   - *Check tightness of clamps and screws.*
   - *Inspect parts for damage, cracks or obstructions.*
   - *Check for damaged or missing gaskets.*
3. Use of unsuitable engine oil type.
   - *Replace engine oil by the recommended engine oil.*

4. Excessive carbon build up on housing.
   - *Check for excessive pressure in crankcase and correct function of crankcase ventilation system.*
   - *Check if the oil return hose is clean and not restricted.*

EXCESSIVE ENGINE OIL IN TURBO CHARGER

1. Worn out bearings of rotor shaft.
   - *Perform a pressure drop test, see procedure in this subsection.*
   - *Note that oil some traces are normal.*
2. Blocked oil return hose.
   - *Check if oil return hose is free.*
3. Plugged crankcase ventilation system.
   - *Check if crankcase ventilation system is blocked.*
4. Intake system collapsed or restricted.
   - *Check tightness of clamps and screws.*
   - *Check for damaged or missing gaskets.*
   - *Check for foreign object between air filter and turbo charger.*
   - *Inspect parts for damage, cracks or obstructions.*
5. Exhaust system collapsed, restricted or leaking.
   - *Check tightness of clamps and screws.*
   - *Inspect parts for damage, cracks or obstructions.*
   - *Check for damaged or missing gaskets.*
   - *Check for foreign object in the exhaust system.*
6. Support brackets, turbo charger flanges or clamps are loose.
   - *Check tightness of clamps and screws.*
   - *Check if support brackets and parts connected to the turbo charger are not loose or damaged.*
7. Excessive carbon build up on housing.
   - *Check if crankcase ventilation system is blocked.*

DAMAGED ROTOR OF TURBINE OR COMPRESSOR

1. Intake system leaking.
   - *Check for foreign object between air filter and turbo charger.*
   - *Inspect air filter. Refer to PERIODIC MAINTENANCE PROCEDURES subsection.*
   - *Check tightness of clamps and screws.*
   - *Inspect parts for damage, cracks or obstructions.*
2. Exhaust system collapsed, restricted or leaking.
   - *Check tightness of clamps and screws.*
   - *Inspect parts for damage, cracks or obstructions.*
   - *Check for damaged or missing gaskets.*
   - *Check for foreign object in the exhaust system.*
3. Turbo charger blocked or damaged
   - *Check for excessive carbon build up on housing.*
   - *Check for rotor radial clearance.*
   - *Check if rotor shaft bearing is worn out.*
   - *Check turbo charger housing if damaged or restricted.*
4. Oil supply hose and/or oil return hose blocked.
   - *Check and/or replace oil hoses, refer to procedures in this subsection.*
5. Too little warm up time.
   - *Extend warm up period.*

EXCESSIVE RADIAL AND/OR AXIAL CLEARANCE OF ROTOR SHAFT

1. Intake system leaking.
   - *Check for foreign object between air filter and turbo charger.*
   - *Inspect air filter. Refer to PERIODIC MAINTENANCE PROCEDURES subsection.*
   - *Inspect parts for damage, cracks or obstructions.*
2. Exhaust system collapsed, restricted or leaking.
   - *Check tightness of clamps and screws.*
   - *Inspect parts for damage, cracks or obstructions.*
   - *Check for damaged or missing gaskets.*
   - *Check for foreign object in the exhaust system.*
3. Insufficient lubrication or oil lag at start up.
   - *Inspect oil pressure hose if restricted, blocked or leaking.*
   - *Inspect engine oil filter if restricted or blocked, refer to PERIODIC MAINTENANCE PROCEDURES subsection.*
   - *Check engine oil pressure, refer to LUBRICATION SYSTEM subsection.*
4. Engine oil contaminated or unsuitable engine oil type.
   - *Replace engine oil and filter, refer to PERIODIC MAINTENANCE PROCEDURES subsection.*
5. Excessive carbon build up on housing.
   - *Check if crankcase ventilation system is blocked.*
6. Worn out bearings of rotor shaft.
   - *Perform a pressure drop test, see procedure in this subsection.*

PROCEDURES

OIL PRESSURE HOSE

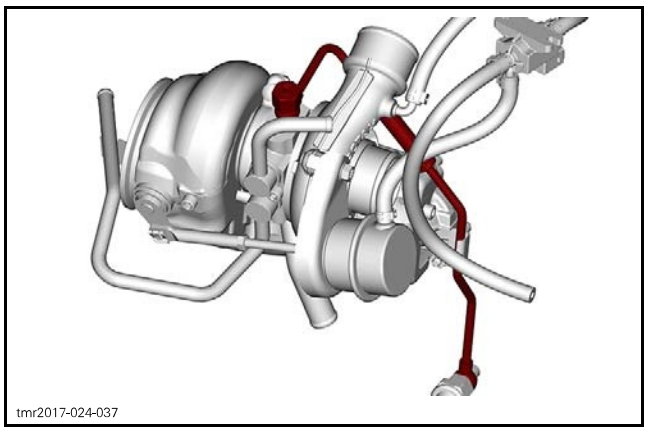
tmr2017-024-037

Oil Pressure Hose Access

Refer to the appropriate subsection and remove:
- Rear service cover
- Front CVT hose outlet.

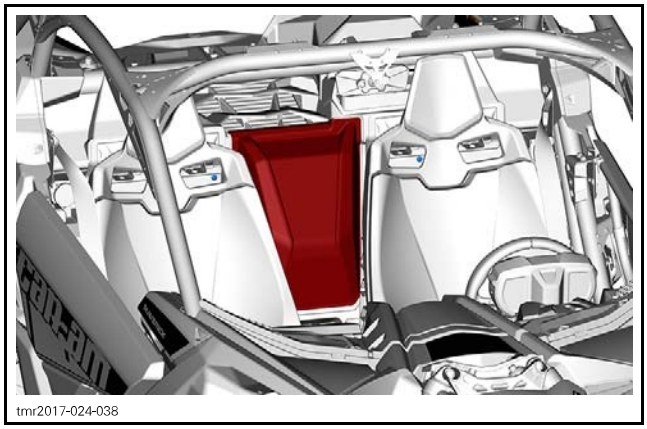
tmr2017-024-038

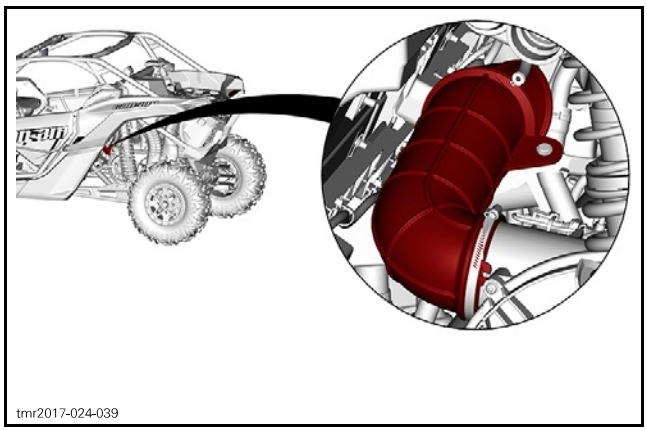
tmr2017-024-039

NOTICE Prevent debris from entering the turbocharger. block all openings.

Removing the Oil Pressure Hose

1. Disconnect oil pressure switch.
2. Remove:
   - Threaded nipple with oil pressure switch
   - Gasket rings (discard them).

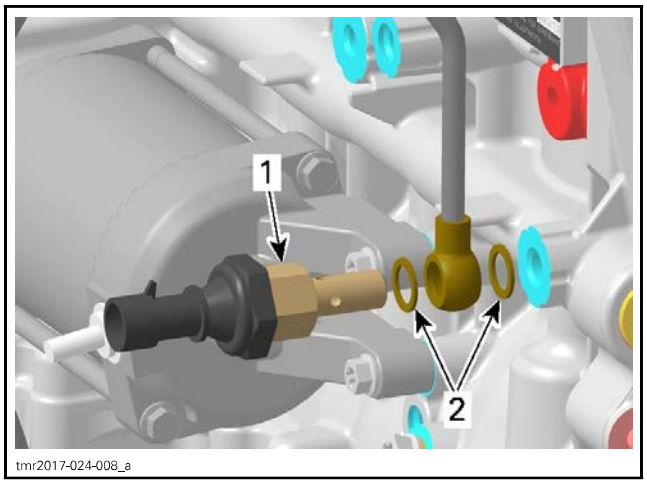

tmr2017-024-008_a

1. Threaded nipple with oil pressure switch
2. Gasket rings

3. Place hose over a drain pan to catch up oil spillage.
4. Remove:
   - Threaded nipple
   - Gasket rings (discard them)
   - Hose nipple.

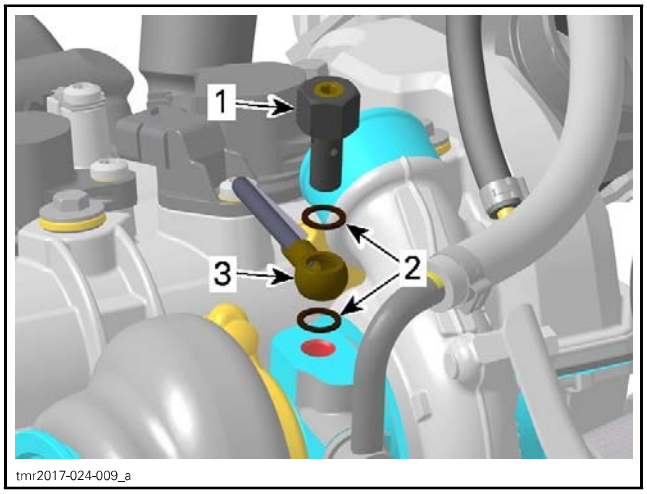

tmr2017-024-009_a

1. Threaded nipple
2. Gasket rings
3. Hose nipple

5. Pull oil pressure hose out of the turbo charger.
6. Remove retaining clamp nut.

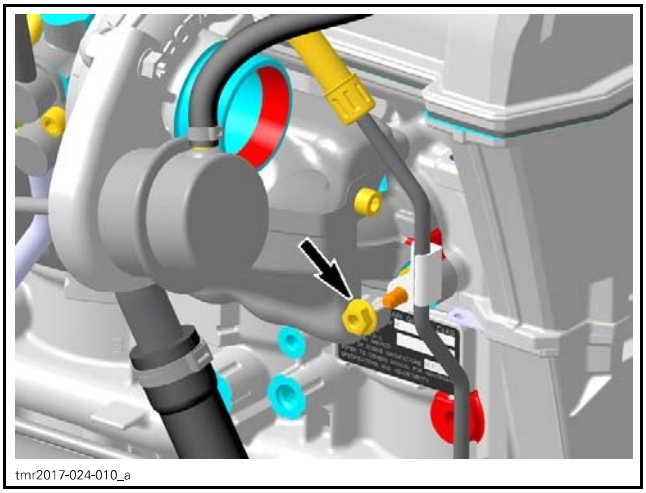
tmr2017-024-010_a

7. Cap and pull hose out of vehicle.

NOTICE Clean all spilled oil.

Installing the Oil Pressure Hose

Reverse the removal procedure.

Refer to exploded view for service products and torques.

Refill engine with recommended engine oil. Refer to *OIL LEVEL VERIFICATION* in the *PERIODIC MAINTENANCE PROCEDURES* subsection.

OIL RETURN HOSE

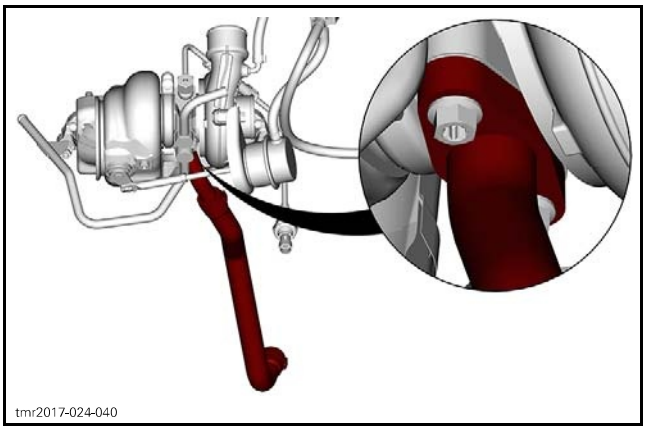
tmr2017-024-040

Oil Return Hose Access

Refer to appropriate subsection and remove:
- Rear service cover
- Front CVT outlet hose

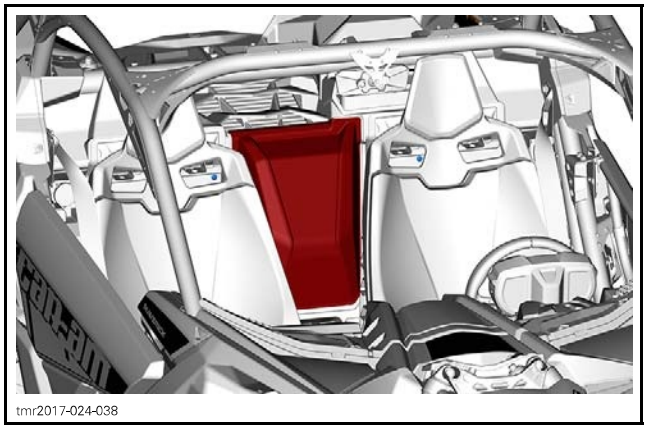
tmr2017-024-038

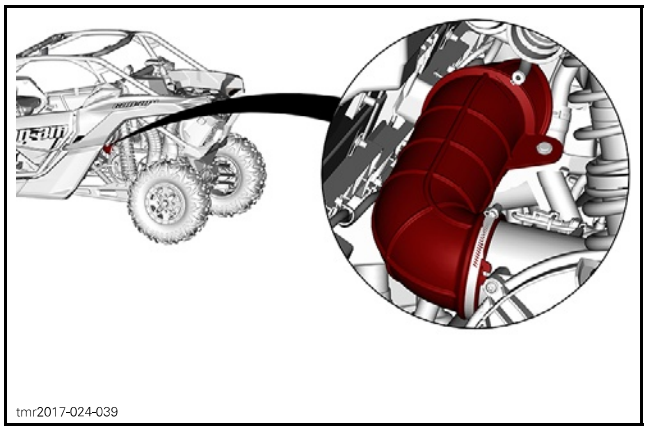
tmr2017-024-039

Removing the Oil Return Hose

1. Remove:
   - Retaining screws
   - Oil tube
   - Gasket (discard it).

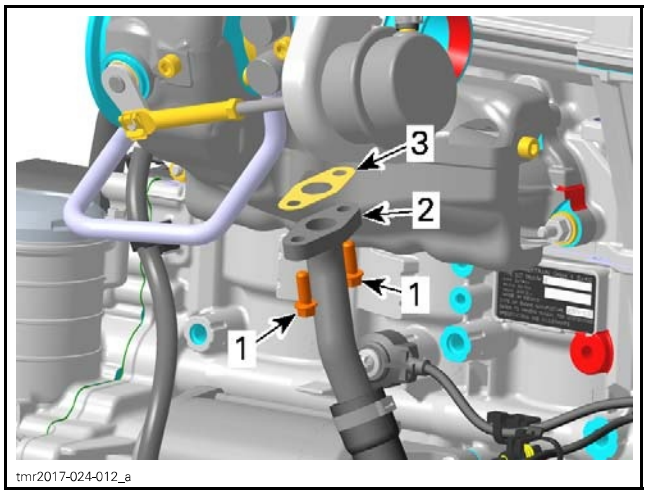

tmr2017-024-012_a

1. *Retaining screws*
2. *Oil tube*
3. *Gasket*

2. If necessary remove and discard Oetiker clamp and withdraw hose from oil tube.

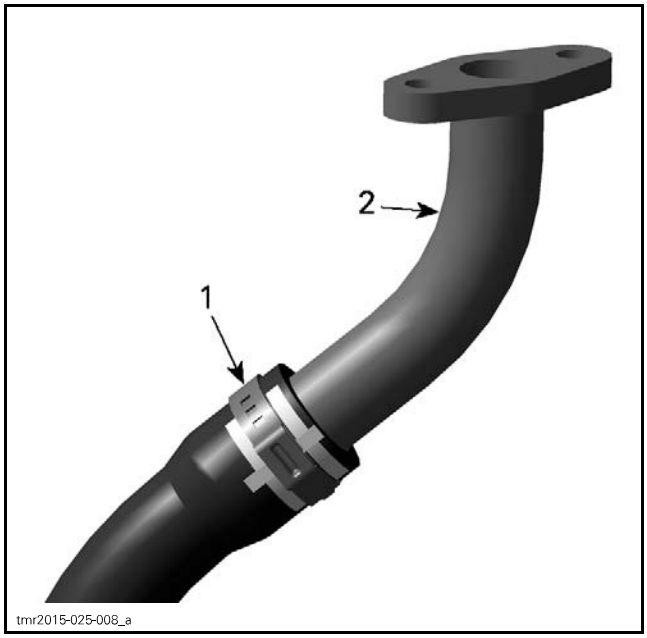

1. *Oetiker clamp*
2. *Oil tube*

3. Remove and discard Oetiker clamp and withdraw hose from oil sump cover.

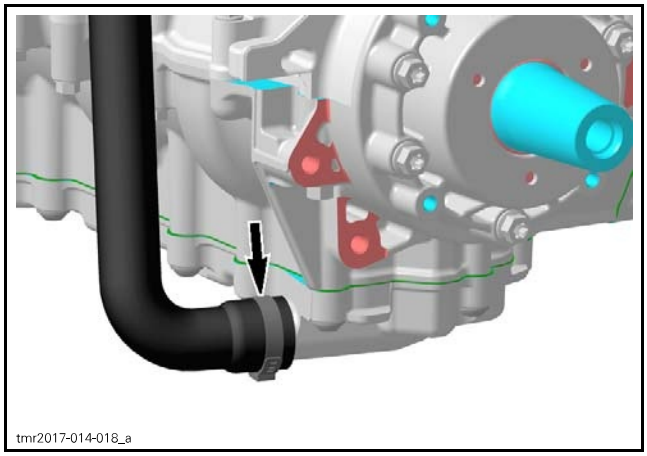

Installing the Oil Return Hose

The installation is the revers of the removal procedure. However, pay attention to the following.

Make sure the engine harness is not trapped between the oil return hose and the engine..

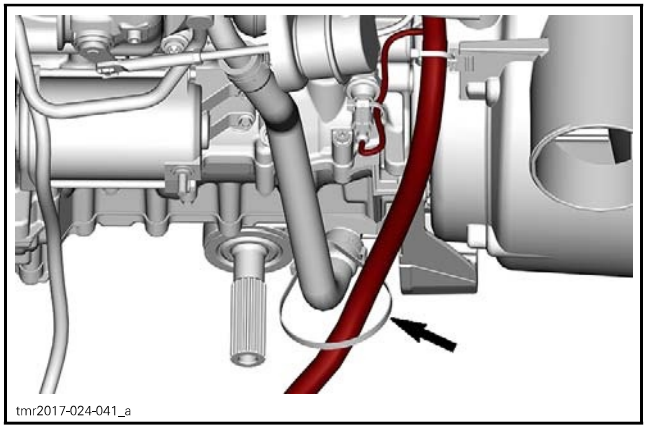

Refer to exploded view for service products and torques.

Refill engine with recommended engine oil. Refer to *OIL LEVEL VERIFICATION* in the *PERIODIC MAINTENANCE PROCEDURES* subsection.

TURBO CHARGER

Turbo Charger Access

1. Remove the rear service cover. Refer to *BODY* subsection.

Removing the Turbo Charger

In order to make room to work comfortably, it is recommended to remove the passenger door and both seats and seat rails.

1. Remove the CVT air outlet hose and its bracket.

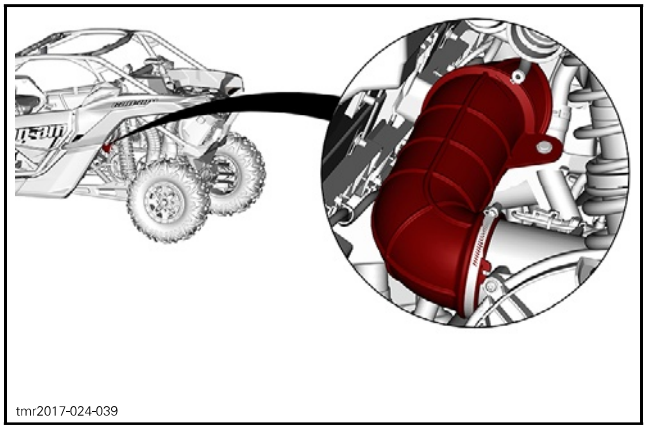

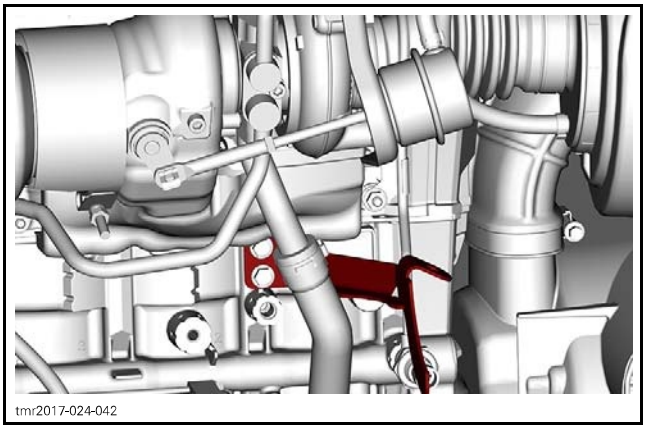
tmr2017-024-042

2. Remove *OIL PRESSURE HOSE* from turbo. Refer to procedure in this subsection.
3. Remove clamps and disconnect BCV hoses from turbo.

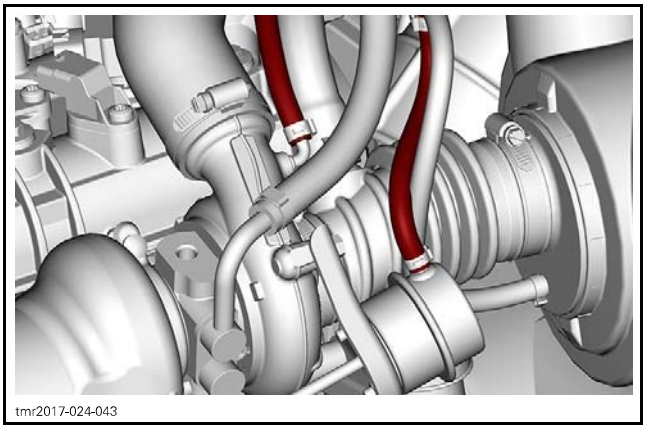
tmr2017-024-043

4. Remove the waste gate actuator and its bracket from turbo.

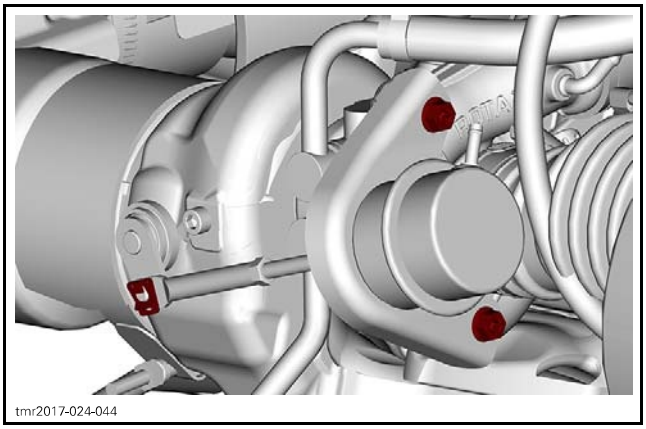
tmr2017-024-044

5. Loosen clamps and disconnect air inlet and outlet hoses.

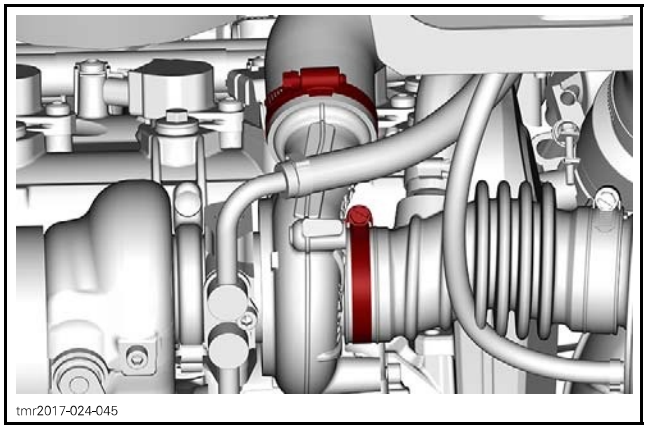
tmr2017-024-045

6. Remove clamp and upper coolant hose connected to the coolant tube.
   6.1 Install a hose pincher on each hoses.

REQUIRED TOOL	
SMALL HOSE PINCHER (P/N 295 000 076)	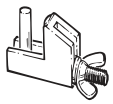

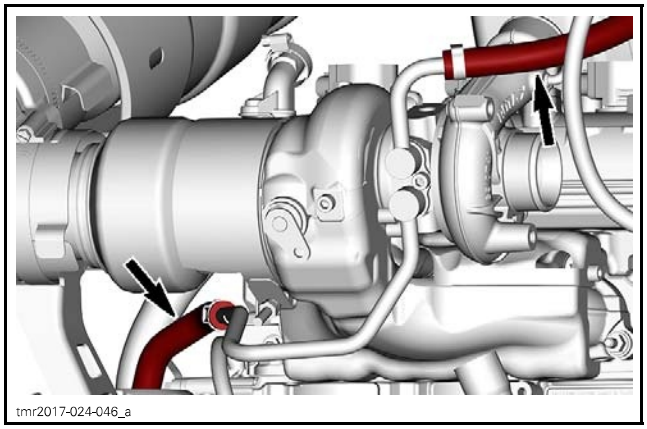
tmr2017-024-046_a

   6.2 Remove clamp and disconnect upper coolant hose.

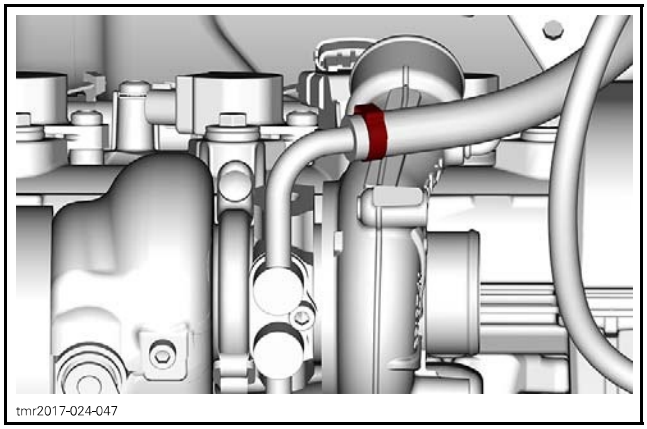
tmr2017-024-047

7. Remove the exhaust pipe clamps.

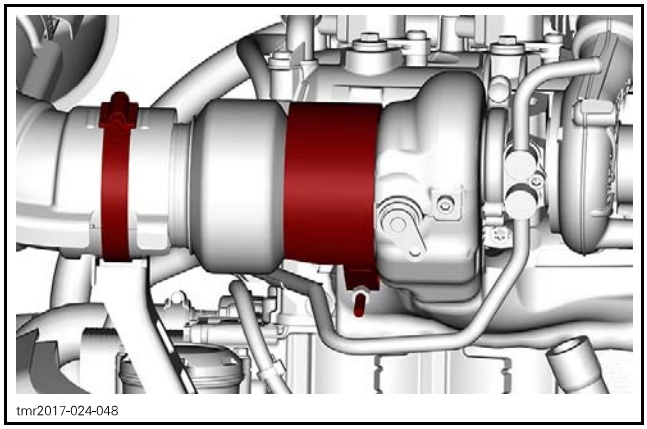
tmr2017-024-048

8. Remove coolant tube retaining nut and screw.

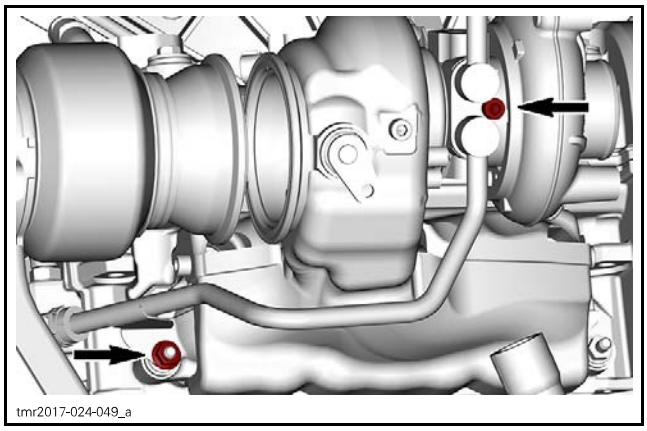
tmr2017-024-049_a

9. Move the coolant tube aside.
10. Remove heat shield retaining screws.

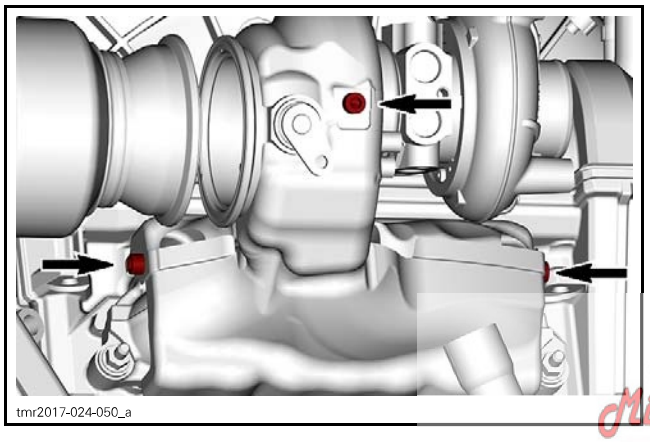
tmr2017-024-050_a

11. Remove lower heat shield.

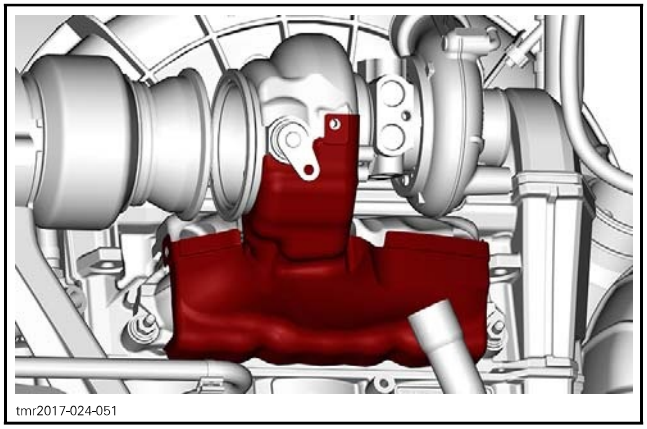
tmr2017-024-051

12. Remove the turbo retaining screws and washers.

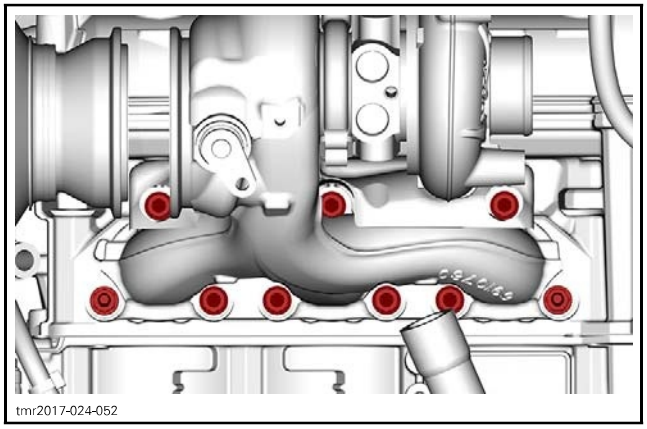
tmr2017-024-052

13. Remove turbo charger.

Inspecting the Turbo Charger

Check turbo charger:

- for any damages or cracks
- for corrosion
- for any oil leak
- for contamination and/or oil coking at oil inlet and outlet
- if rotor shaft turns smooth and easily.

Midwest Manuals
Green Manuals
Paperless Manuals
For a Better Tomorrow
If you bought this manual from any other seller please leave them
NEGATIVE feedback and notify me at bestshopmanuals@gmail.com

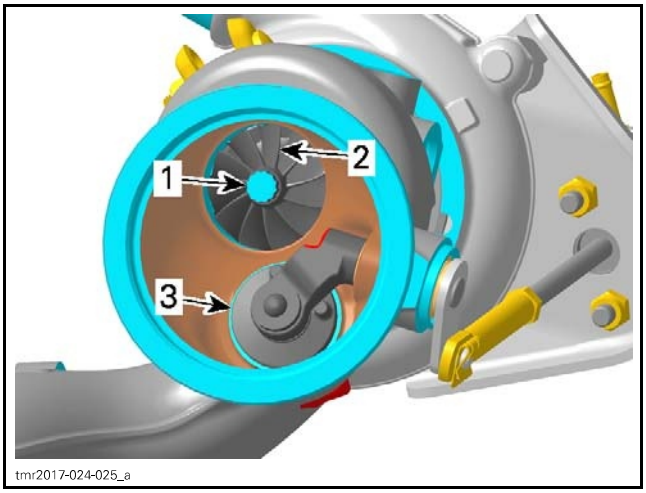

1. Rotor shaft
2. Turbine rotor
3. Waste gate

Testing the Rotor Shaft Bearing Leakage

REQUIRED TOOL	
ENGINE LEAK DOWN TEST KIT (P/N 529 035 661)	
TURBO TEST KIT (P/N 529 036 321)	

Block the oil return bore.

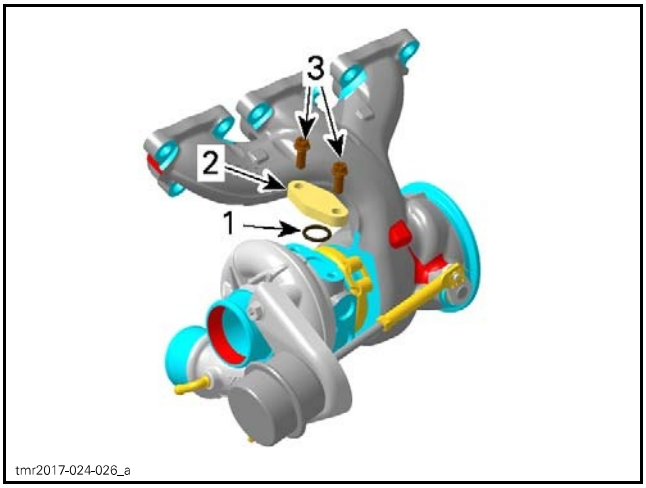

1. O-ring
2. Cover plate of turbo test kit
3. Screw

Install gauge adapter into previously cleaned the oil supply bore.

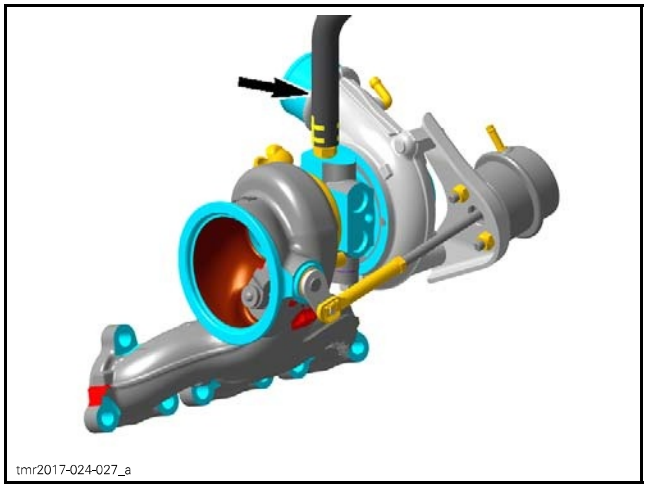

Connect leak tester to adequate air supply.

Set needle of measuring gauge to zero.

NOTE: All testers have specific instructions on gauge operation and required pressure.

Supply turbo charger with air pressure.

NOTICE **During leakage test apply slightly a alternating radial pressure onto the shaft to achieve a proper test result.**

ROTOR SHAFT BEARING LEAKAGE TEST	
SERVICE LIMIT	50%

Waste Gate Lever and Waste Gate

Remove retaining clip.

Check for waste gate actuator rod play on lever pin.

Disconnect the waste gate actuator rod from the waste gate lever.

Check counter nut of waste gate actuator rod for tightness.

NOTICE **Do not open counter nut of waste gate actuator rod. Length of waste gate actuator rod assembly must not change.**

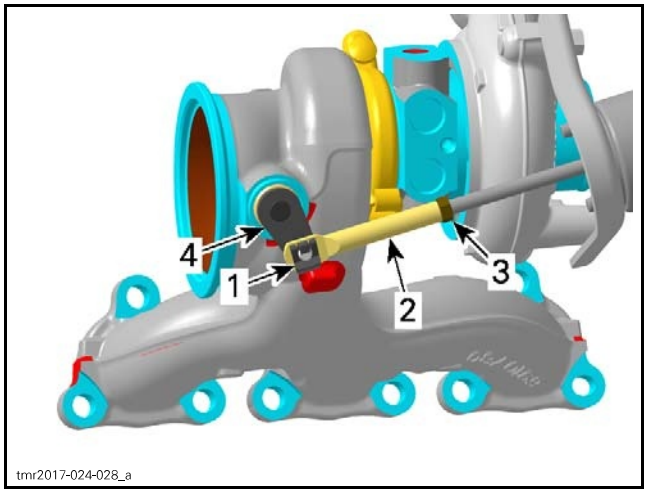

1. *Retaining clip*
2. *Waste gate actuator rod*
3. *Counter nut*
4. *Waste gate lever*

Check the waste gate lever for free movement.

Check waste gate and its seat for wear or damage.

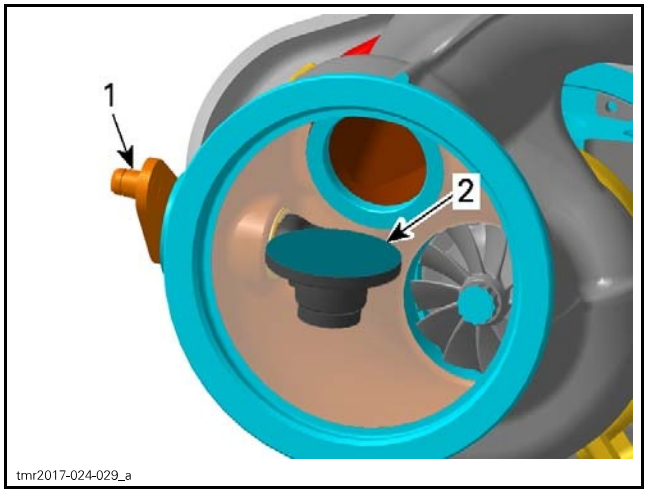

1. *Waste gate lever*
2. *Waste gate*

Rotor of Turbine and Compressor

Check rotor visually for:

– bent blades
– any damages
– thermal stress (turbine rotor).

Apply slightly a radial pressure onto the shaft to minimize the gap between rotor and housing.

Check radial clearance of the rotors in the complete circumference.

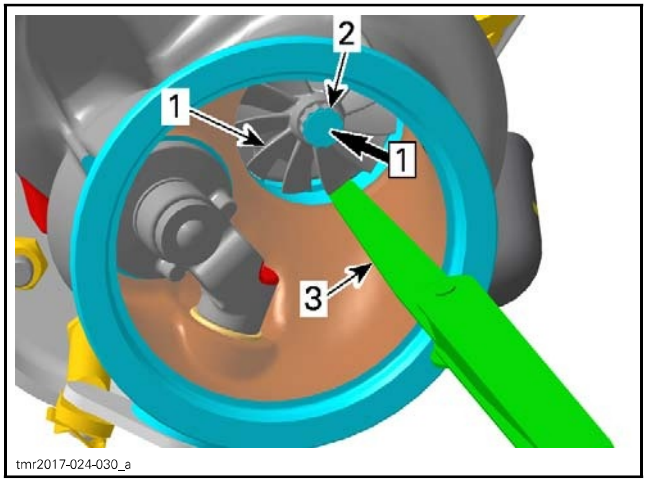

TURBINE ROTOR
Step 1: Push slightly

1. *Rotor*
2. *Shaft*
3. *Feeler gauge*

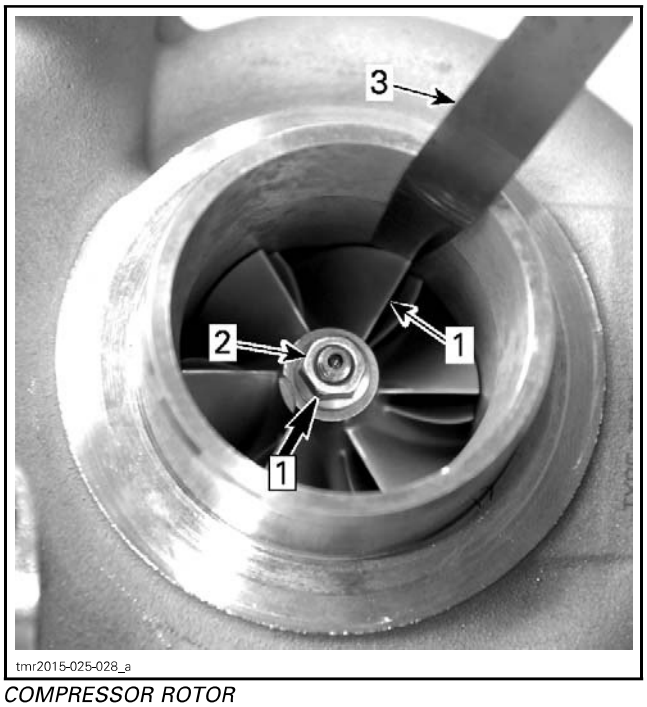

COMPRESSOR ROTOR
Step 1: Push slightly

1. *Rotor*
2. *Shaft*
3. *Feeler gauge*

REQUIRED TOOL
Feeler gauge 0.1 mm (.004 in)

ROTOR RADIAL CLEARANCE	
SERVICE LIMIT	Minimum of 0.1 mm (.004 in)

Rotor Shaft

Check discoloration of the shaft due to overheating.

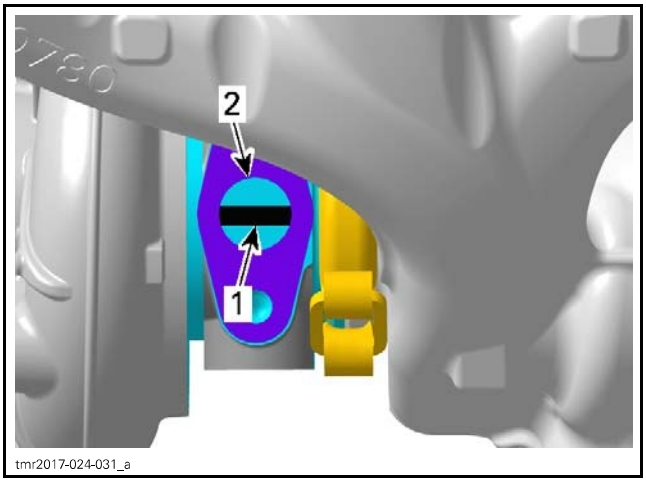

1. *Shaft*
2. *Oil return bore*

Actuator

Apply air pressure to the actuator.

Measure movement of waste gate actuator rod at specified air pressure.

REQUIRED TOOL	
Dial gauge	
VACUUM/PRESSURE PUMP (P/N 529 021 800)	

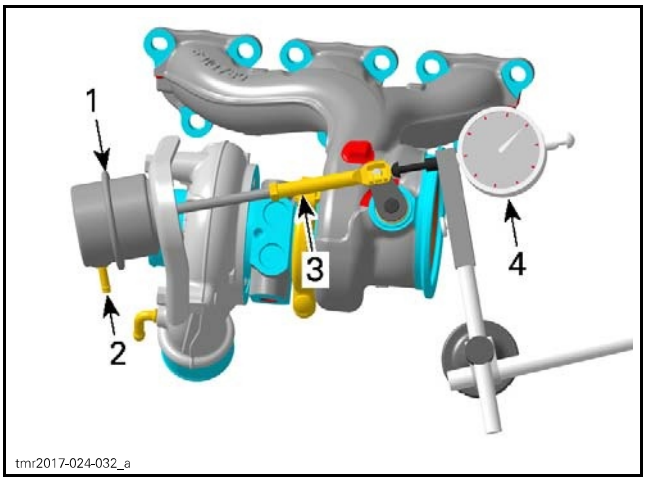

ALIGN DIAL BORE GAUGE WITH WASTE GATE ACTUATOR ROD

1. *Actuator*
2. *Fitting for air pressure supply*
3. *Waste gate actuator rod*
4. *Dial gauge*

MOVEMENT OF WASTE GATE ACTUATOR ROD	
Air Pressure	Movement
43 kPa (6.24 PSI)	1 mm ± 0.5 mm (.039 in ± .02 in)

Turbine Flange Surface

Check warpage of turbine flange.

REQUIRED TOOL
Straight edge
Feeler gauge 0.1 mm (.004 in)

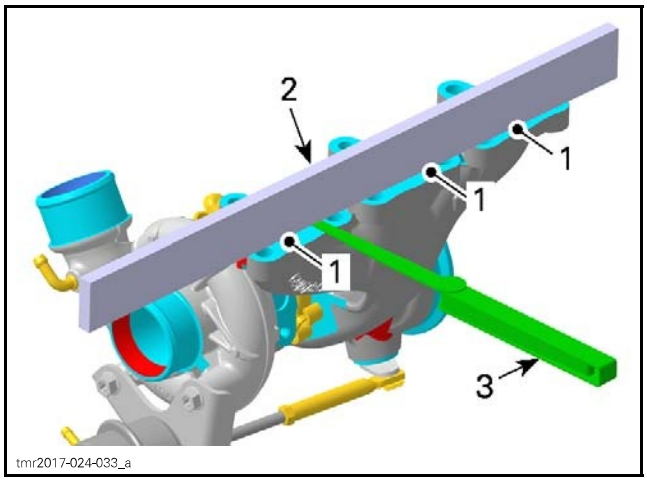

1. *Turbine flange*
2. *Straight edge*
3. *Feeler gauge*

TURBINE FLANGE WARPAGE	
SERVICE LIMIT	Maximum of 0.1 mm (.004 in)

Installing the Turbo Charger

For installation, reverse the removal procedure. However, pay attention to the following.

Tighten turbo charger retaining screws according to the sequence.

TIGHTENING TORQUE		
Turbo charger retaining screws	STEP A	5 N•m ± 0.6 N•m (44 lbf•**in** ± 5 lbf•**in**)

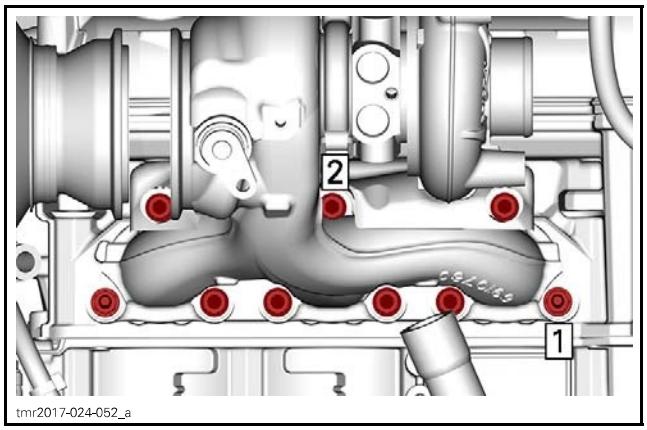

TIGHTENING TORQUE		
Turbo charger retaining screws	STEP B	23 N•m ± 3 N•m (17 lbf•ft ± 2 lbf•ft)

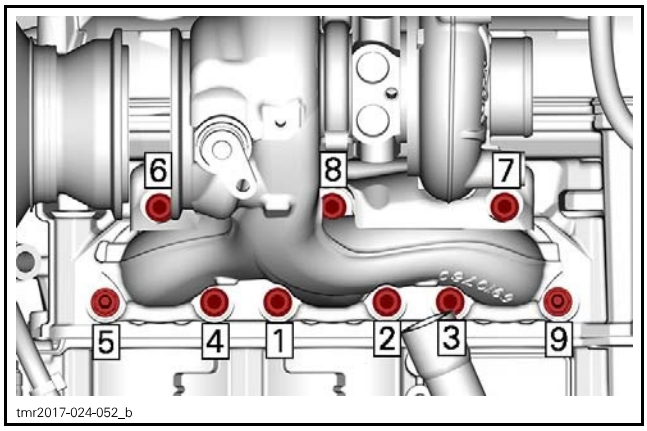

tmr2017-024-052_b

Fill turbo charger at oil supply bore with engine oil and turn rotor shaft until turbo charger is filled completely.

Then immediately install oil return hose and oil supply hose, refer to procedures in this subsection.

Refill engine with recommended engine oil. Refer to *OIL LEVEL VERIFICATION* in the *PERIODIC MAINTENANCE PROCEDURES* subsection.

Start the engine and let it idle for a few minutes to ensure proper turbo charger lubrication.

INTERCOOLER

Intercooler Access

Refer to *BODY* subsection and remove:

– Rear service cover
– Air box cover
– Intercooler grille

Removing the Intercooler

NOTICE When removing the intercooler, always plug the turbo charger hoses with clean rags to prevent dirt from entering the turbo.

1. Loosen the clamp and disconnect the intercooler air outlet hose.

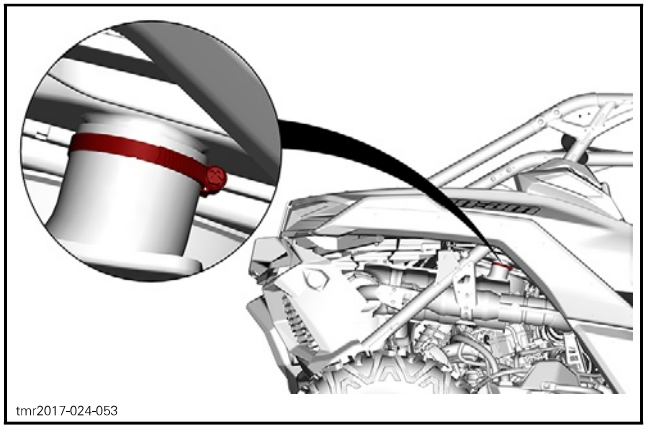
tmr2017-024-053

2. Loosen the clamp and disconnect the intercooler air inlet hose from the turbo.

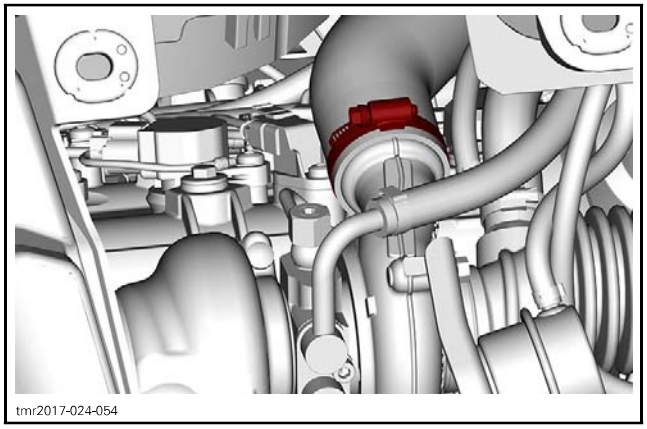
tmr2017-024-054

3. Cut locking tie and disconnect fan connector.

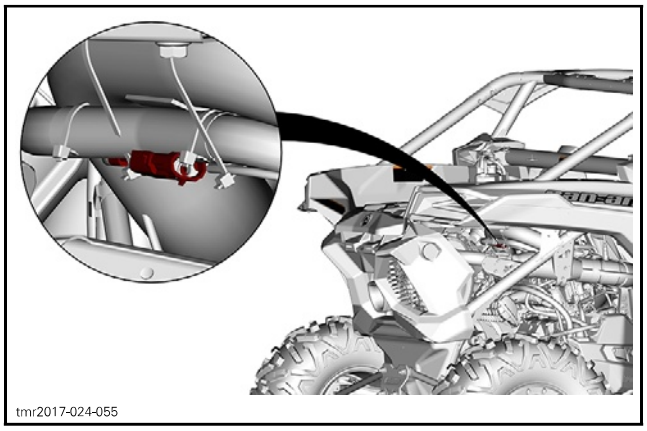
tmr2017-024-055

4. Remove the intercooler retaining screws.

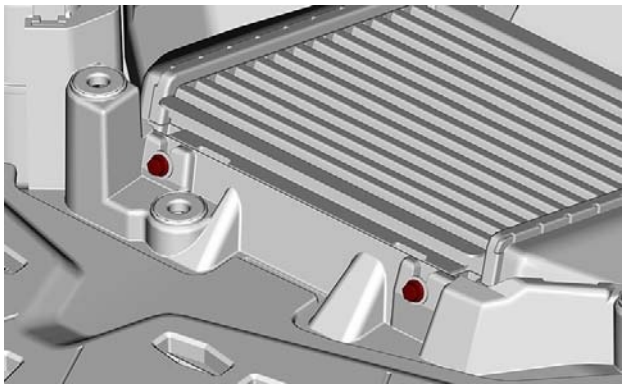
tmr2017-024-056

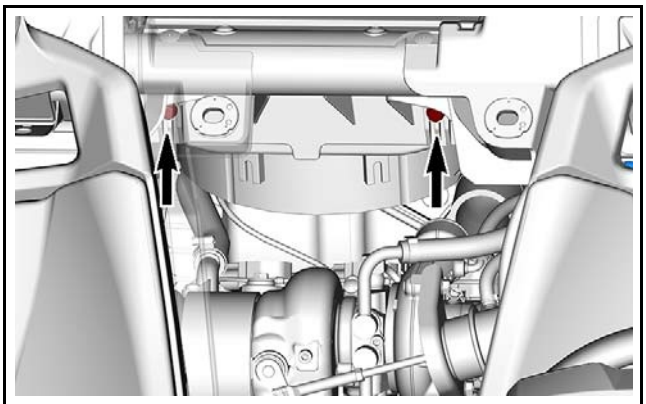
tmr2017-024-057_a

5. Remove intercooler.

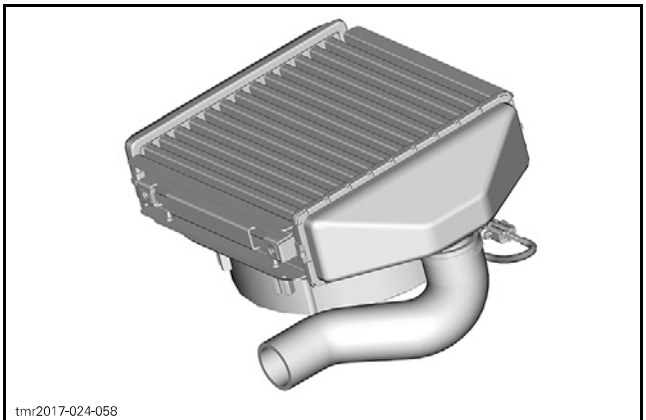
tmr2017-024-058

Inspecting the Intercooler

NOTE: When vehicle is running at operating temperature, intercooler outlet air temperature should be lower than inlet air temperature. The temperature difference will vary with atmospheric conditions.

Check radiating fins for clogging or damage.

Remove insects, mud or other obstructions with compressed air or low pressure water.

Intercooler Leak Test

Block outlet hose.

Unplug the inlet hose from the intercooler.

Install the VACUUM/PRESSURE PUMP (P/N 529 021 800) with an adaptor on inlet fitting.


529021800

VACUUM/PRESSURE PUMP

Pressurize the intercooler.

NOTICE **Testing at higher pressures can damage the system.**

PRESSURE TEST
100 kPa (14.5 PSI) for 2 minutes minimum

If there is a pressure drop, first spray tool, hoses and adapters with a soapy water solution to ensure they are not leaking. If they are not leaking, replace the intercooler.

Installing the Intercooler

Reverse removal procedure.

INTERCOOLER FAN

Intercooler Fan Access

Remove intercooler. Refer to procedure in this subsection.

Inspecting the Intercooler Fan

Fan must be easy to turn by hand.

Refer to *WIRING DIAGRAM*.

INTERCOOLER FAN SPECIFICATIONS	
Commanded on by ECM	At wide open throttle and as needed
Speed(s)	1
Monitored in B.U.D.S.	No
Activated in B.U.D.S.	Yes, ECM tab

INTERCOOLER FAN SPECIFICATIONS	
Resistance	Approximately 2.8 Ω
Power (+)	Battery voltage
Ground (-)	Permanent ground

If battery voltage is not present when fan is activated in B.U.D.S., refer to *WIRING DIAGRAM* and test fuse(s), relay and harness.

For ground location on vehicle, refer to *POWER DISTRIBUTION AND GROUNDS* subsection.

Replacing the Intercooler Fan

Remove fan screws and replace the fan.

TIGHTENING TORQUE	
Fan screw	3.5 N•m ± 0.5 N•m (31 lbf•**in** ± 4 lbf•**in**)

ENGINE MANAGEMENT SYSTEM (EMS)

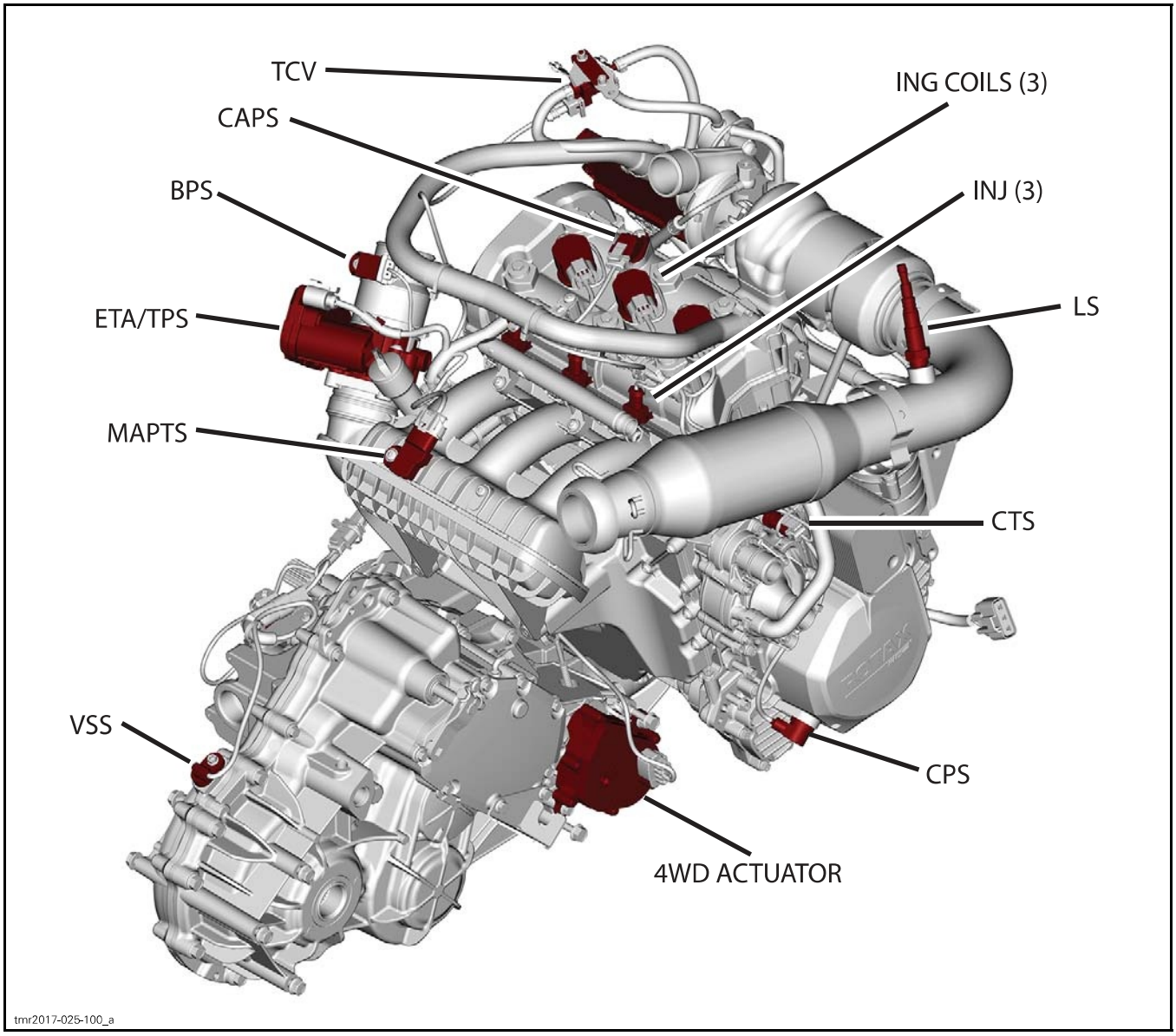

Midwest Manuals
Green Manuals
Paperless Manuals
For a Better Tomorrow
If you bought this manual from any other seller please leave them
NEGATIVE feedback and notify me at bestshopmanuals@gmail.com

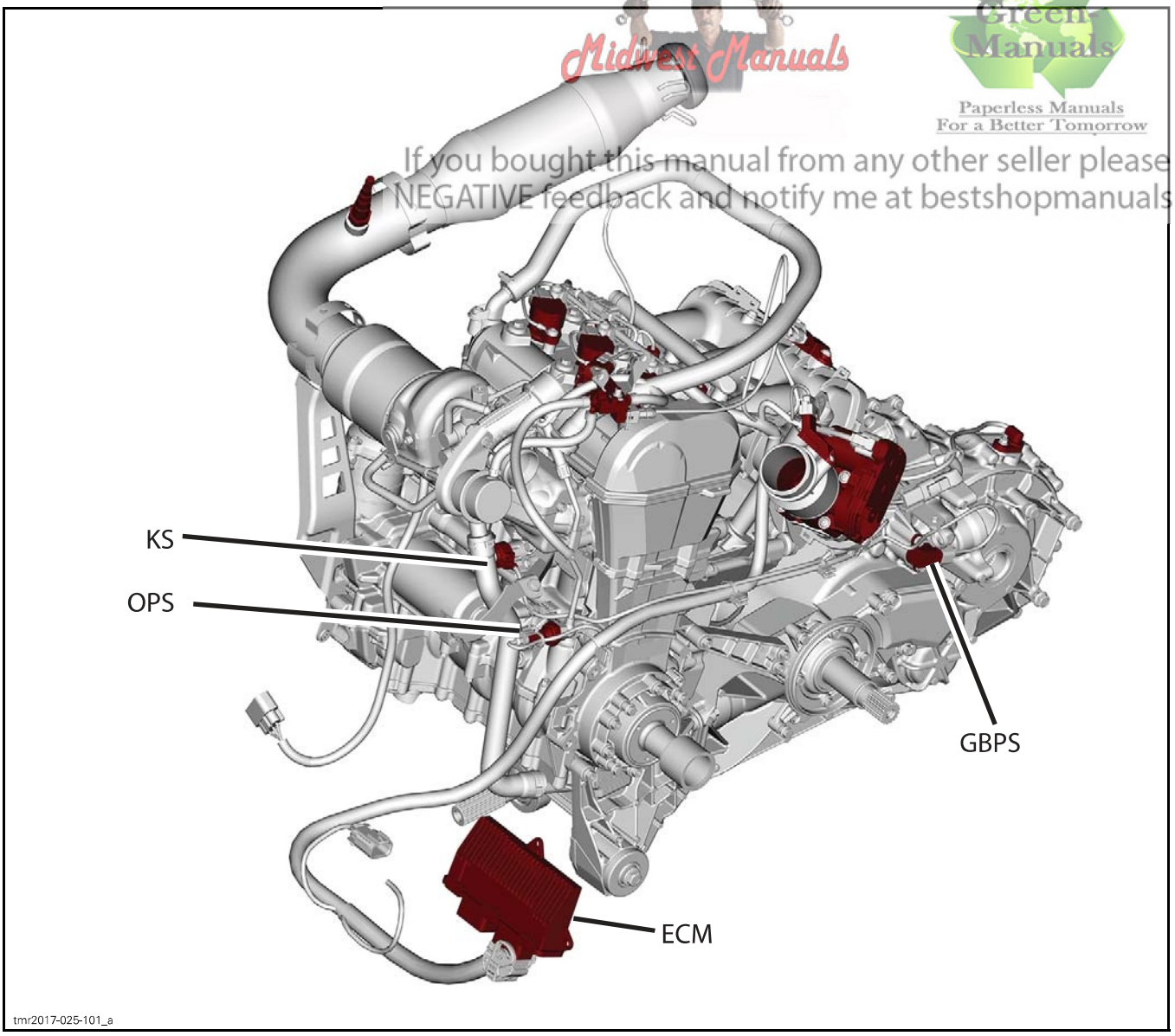

TCV = Turbo Control Valve
BPS = Boost Pressure Sensor
CAPS = Camshaft Position Sensor
CPS = Crankshaft Position Sensor
CTS = Cooling Temperature Sensor
ECM = Engine Control Module
ETA = Electric Throttle Actuator
GBPS = Gearbox Position Sensor
IGN COIL = Ignition coil
INJ = Injector
MAPTS = Manifold Air Pressure/Temperature Tensor
LS = Lambda Sensor
OPS = Oil Pressure Switch
TPS = Throttle Position Sensor
VSS = Vehicle Speed Sensor

GENERAL

SYSTEM DESCRIPTION

The ECM ensures a high power output with clean combustion.

There are 7 main systems that are controlled by the ECM:

1. Electronic Fuel Injection (EFI)
2. Intelligent throttle control (iTC)
3. Cooling system (cooling fan)
4. Ignition system
5. Starting system
6. Fuel system
7. D.E.S.S.

NOTE: For further information related to these systems, refer to the applicable subsection.

The ECM is the central point of the engine management system.

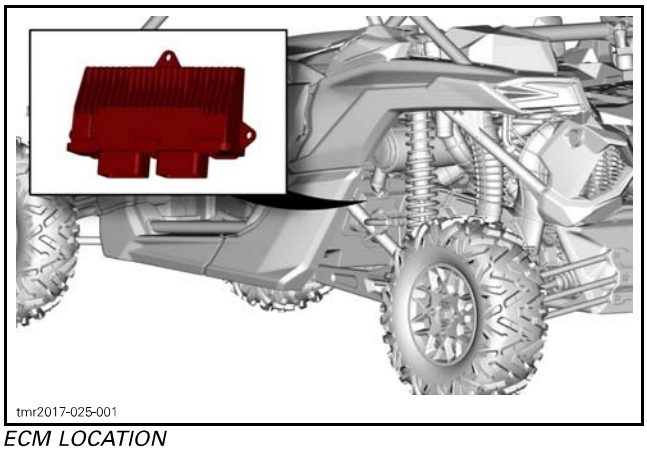

ECM LOCATION

The ECM reads input signals from various switches, controls, and sensors, that it compares to predetermined parameters, makes computations, and provides control signal outputs required for proper engine management.

The ECM also interacts through CAN bus with other electronic modules for various functions, information exchange and display of messages. Refer to *CONTROLLER AREA NETWORK (CAN)*.

The ECM also features a permanent memory that will store the information on the various ignition keys programmed to the vehicle, fault codes, customer information, and other engine information, even when the battery is removed from the vehicle.

Diagnostic Mode

The ECM features a self-diagnostic mode that is activated on system power up (ignition key ON) for certain systems and components, and when the engine is running for others. Refer to *DIAGNOSTIC AND FAULT CODES* subsection for more information.

Monitoring System

The MONITORING SYSTEM monitors various electrical and electronic components of the engine control systems such as the:

– ETA (Electric Throttle Actuator)
– TPS (Throttle Position Sensor)
– TAS (Throttle Accelerator Sensor)
– ECM (Engine Control Module).

The engine management system provides for redundancies in these components should a failure or partial failure occur to which it will adjust system operation to protect the vehicle and most of importantly, the driver.

Should the engine management system not respond (or not respond correctly) to a failure, then the monitoring system will react to ensure vehicle and driver safety.

The monitoring system therefore ensures the engine management system is functioning correctly.

Limp Home Mode

When a major component of the EMS is not operating properly, limp home mode will be set.

Engine RPM will be limited and/or engine behavior and control may be modified depending on the cause of the failure.

LIMP HOME will be displayed in the multifunction gauge and the CHECK ENGINE light symbol will be on in the gauge.

A failure of any of the following major components will force the vehicle into LIMP HOME MODE:

– TPS / ETA / TAS
– GBPS
– Injectors
– Low oil pressure
– High engine coolant temp
– MAPTS signal fault.

CONTROLLER AREA NETWORK (CAN)

GENERAL

SYSTEM DESCRIPTION

The CAN (Controller Area Network) protocol is an ISO standard for serial data communication.

The CAN bus, which is composed of a pair of twisted wires (WHITE/BEIGE and WHITE/BLACK), is the nervous system of the engine management system (EMS). It links the electronic modules (ECUs) together, allowing them to communicate and interact with each other as required.

If a component or system malfunction is detected, a module may generate a fault code, which it transmits through the CAN bus as a signal. The fault signal may be used for various functions such as triggering the display of an error message in the multifunction gauge display, turning on a fault indicator light, limiting or inhibiting vehicle or engine operation, or viewed using the BUDS2 software for troubleshooting.

Using B.U.D.S., technicians may also communicate through the diagnostic connector (DB) with the ECM (Engine Control Module) and the multifunction gauge for various reasons such as:

– Extracting data
– Programming a module
– Changing settings
– Viewing fault codes
– and for various other functions.

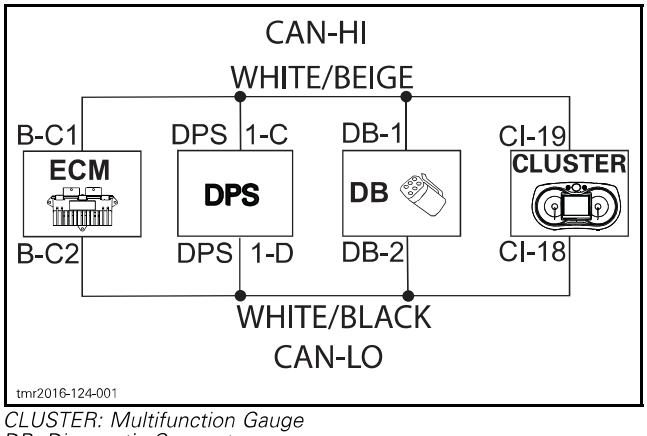

CLUSTER: Multifunction Gauge
DB: Diagnostic Connector
DPS: Dynamic Power Steering
ECM: Engine Control Module

COMMUNICATION TOOLS

SERVICE TOOLS

Description	Part Number	Page
DIAGNOSTIC CABLE	710 000 851	1
MPI-2 INTERFACE CARD	529 036 018	1
MPI-3 INTERFACE CARD	529 036 353	1

GENERAL

Use BUDS2.

Refer to the **B.U.D.S. directory** on *KNOWLEDGE CENTER* for all BUDS related information, including:

- Current version download link
- User manual (programming keys, reading fault codes, writing data to modules etc.)
- Installation instructions
- Navigation through menus
- BRP BUDS chart

Search keyword: "BUDS".



mmr2017-025-001

REQUIRED TOOLS

MANDATORY TOOLS	
A personal computer (laptop or desktop)	
MPI-2 INTERFACE CARD (P/N 529 036 018) **OR** MPI-3 INTERFACE CARD (P/N 529 036 353)	 
DIAGNOSTIC CABLE (P/N 710 000 851)	
OPTIONAL TOOL	
Extension cable available at electronic retail outlets. Do not exceed 7.5 m (25 ft)	

TROUBLESHOOTING

DIAGNOSTIC TIPS

Refer to the BRP BUDS chart to ensure you are using the approriate hardware and tools.

MPI Connection Troubleshooting

MPI Status Lights

The MPI card includes 2 status lights that indicate the connection condition: USB and CAN. Both lights must be GREEN to function properly. Otherwise, refer to the following charts.

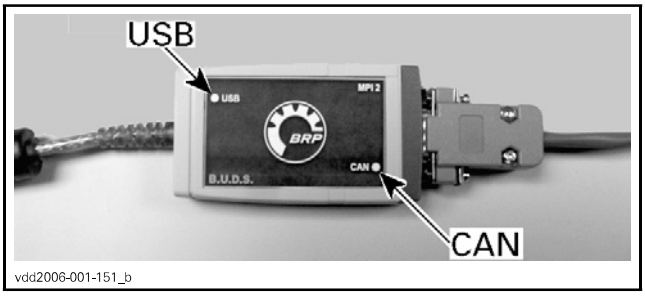

vdd2006-001-151_b

MPI-2 CARD

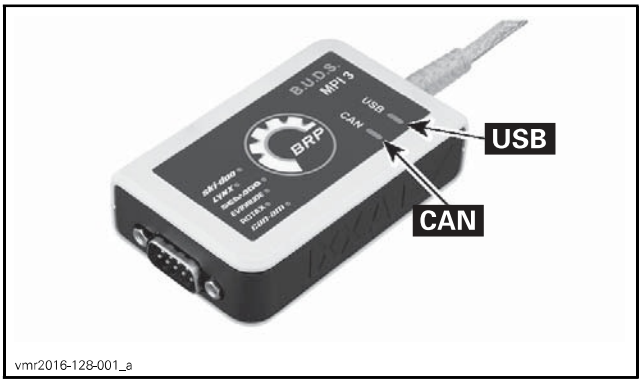

vmr2016-128-001_a

MPI-3 CARD

Prerequisite for USB Communication:

- PC Computer turned on.
- MPI card connected to PC computer.

COMMUNICATION PROBLEM (USB)	
STATUS	WHAT TO DO
Light is OFF	Check USB connection between MPI card and PC computer. Check USB operation on PC computer (hardware or USB drivers)
Light is GREEN	Connections are GOOD. Communication can take place on USB side

Prerequisite for CAN Communication:

- MPI card connected to diagnostic connector on vehicle.
- PC Computer turned ON
- The D.E.S.S. key installed on the engine D.E.S.S. post.
- ECM is powered.

COMMUNICATION PROBLEM (CAN)	
STATUS	WHAT TO DO
CAN Light is OFF	– BUDS2 does not communicate with the vehicle. – Check connections from computer to vehicle. – Check if BUDS2. is started. – Check if vehicle is powered: is cluster turned ON? If it is not ON, install the D.E.S.S. key on the D.E.S.S. post.
CAN Light is RED	This occurs when BUDS2 looses communication with vehicle. – Check connections from computer to vehicle. – Check if vehicle is powered: is cluster turned ON? If not, install the D.E.S.S. key on the D.E.S.S. post.
CAN Light is GREEN	– Connections are GOOD. BUDS2 communicates normally with the vehicle.

PROCEDURES

MULTI-PURPOSE INTERFACE CARD (MPI-2 OR MPI-3)

The MPI (Multi-Purpose Interface) in conjunction with the diagnostic cable is used with BUDS2 to communicate with the ECM (engine control module) and other modules.

MPI Card Power

The MPI card uses the power from the PC computer's USB port.

Diagnostic Connector Location

The 6-pin diagnostic connector is located inside the glove box compartment.



tmr2017-027-001

DIAGNOSTIC AND FAULT CODES

GENERAL

MONITORING SYSTEM

The ECM features a monitoring system that self-diagnoses various electrical and electronic components. This mode becomes active when the ignition key is turned ON.

NOTE: Some components require the engine to be running to be monitored (fuel injectors for example).

The monitoring system continuously validates that the components (control modules, sensors and actuators) are not faulty or defective. When a malfunction is detected, the related electronic module(s):

– Sets an active fault code.
– Adapts the proper protection strategy according to the failure.
– Sends out signals to the multifunction gauge to inform the rider of a particular condition.

If a minor fault occurs, the engine and vehicle will continue to operate without noticeable loss of performance.

If a more important fault occurs, engine RPM may be limited. The engine/vehicle will continue to operate with reduced performance.

If a major component of the Engine Management System (EMS) fails, engine RPM will be limited as well as vehicle speed. Refer to *LIMP HOME MODE* in the *ENGINE MANAGEMENT SYSTEM* subsection.

These strategies are used to protect engine/electrical system from damage and to maintain safe operation of the vehicle. In extreme cases, the engine may also be completely shut down.

Messages in Gauge for Problematic Conditions

If an abnormal condition occurs, the gauge will display one of the following messages. It can be combined with a pilot lamp.

MESSAGE	DESCRIPTION
CHECK ENGINE	All active or previously activated faults that require attention. No engine limitation engaged.
LIMP HOME	Critical faults requiring diagnostic as soon as possible. An engine limitation is engaged and/or the engine behavior is modified.
LO BATT VOLT	Low battery voltage detected by ECM.
HIGH BATT VOLT	High battery voltage detected by ECM.
LOW OIL	Low oil pressure detected by the ECM.
D.E.S.S. KEY NOT RECOGNIZED	D.E.S.S. KEY is not recognized by ECM.
HI TEMP	High temperature detected by the ECM.
ECM CRC ERROR	Error message from ECM.
TPS FAULT	TPS (throttle position sensor) fault, generally followed by a Limp Home message.
BRAKE SWITCH FAULT	Brake signal fault.
ECM NOT RECOGNIZED	Message displayed when the gauge is unable to identify the ECM.

MESSAGE	DESCRIPTION
TRANSMISSION SIGNAL FAULT	Gearbox position sensor fault active. "E" is also displayed in the gear display.
PPS FAULT	When one or both sensor of the TAS (throttle accelerator sensor) is/are faulty, erratic or out of range or that the ratio between the two is incorrect, the message will be displayed and the check engine pilot lamp will be lit.
MANUAL LIMP HOME	When the TAS Limp Home (throttle accelerator sensor) is engaged, the message will be displayed.

Limp Home Mode

Refer to *LIMP HOME MODE* in the *ENGINE MANAGEMENT SYSTEM* subsection.

FAULT CODES

Fault Code Categories

A fault code consists of an alphanumeric designator followed by a hexadecimal number of 3 digits. The alphanumeric designator defines the category of the fault code while the hexadecimal number refers to a unique fault.

FAULT CODE CATEGORIES		
ALPHANUMERIC DESIGNATOR	MODULE/ SYSTEM	EXAMPLE OF FAULT CODE
From P0 to P3	Power train	P0116
From U0 to U3	Communication between module and sensors	U0073

RELATED MODULE AND FAULTS	
MODULE	FAULT CODE CATEGORY
ECM	P and U
Cluster	P and U
DPS	P and U

Fault Code States

Fault codes have 3 possible states:

– Active
– Occurred
– Inactive.

Active Fault Codes

An active fault code is an indication of a fault that is **currently triggered**.

The active fault may or may not compromise normal operation of the system(s). Service action should be taken to correct the problem that caused the fault code.

Once the fault condition(s) of the active fault is no longer present, its state will change to "occurred".

Occurred Fault Codes

An occurred fault code indicates a fault that was active, but **no longer** is.

The occurred fault does not presently affect system or component operation but is retained as a history of the faults that were detected.

The fault may have been generated due to a system or component that was momentarily operating outside normal parameters. Repeated occurred faults of this type should be considered when troubleshooting a problem, and may require that maintenance action be taken.

An occurred fault may also be generated when disconnecting and reconnecting a component, replacing a burnt fuse, when the software update of an electronic module has been carried out, or may be due to a momentary high or low voltage.

Inactive Fault Codes

An inactive fault code represents a fault code that is neither active, nor occurred. It is simply part of a list of all possible faults that can be monitored by the ECM and multifunction gauge, which may become active or occurred if the monitoring system detects an applicable fault. These codes can be viewed in BRP diagnostic software BUDS2.

Reading and Clearing Fault Codes

Refer to *COMMUNICATION TOOLS* subsection.

For more information pertaining to the faults code status and report, refer to BUDS2.

How to Read Fault Codes Using the Multifunction Gauge

Refer to the applicable *GAUGE* subsection.

NOTE: A fault code must be in an "Active" state to be displayed in the multifunction gauge. BRP diagnostic software BUDS2 must be used to read all fault codes states.

How to Find Fault Code Descriptions

Connect BUDS2 to the vehicle. Refer to *COMMUNICATION TOOLS* subsection.

Navigate to the **Faults** page.

Browse lists of active/occurred and inactive fault codes.

FAULT CODE DIAGNOSTIC

Diagnostic Tips

To see the last two minutes of operating conditions, click on the **Summary** tab in BUDS2 and select **Statistics**.

NOTE: The page displays data whatever there is fault code(s) or not.

GENERAL GUIDELINES TO SOLVE FAULT CODES	
CONDITION	ACTION
Troubleshooting vehicle	Use BUDS2 to: Read fault codes. Display "Active" faults to see components currently not operating normally. Display "Occurred" faults to troubleshoot intermittent problems. Monitor system(s), sensor(s), switches and actual conditions. Activate component(s) for troubleshooting. Set components (resets etc). Know the last minute of operating conditions by using the "History" page. Know the operating conditions, if available, when a fault code occurred by using the "More details" button in the fault page.
New fault(s) appear after a vehicle maintenance or repair	Check sensor connections or mixed up connections. **Before** vehicle maintenance: Read the electronic modules with BUDS2 Save and print the BUDS2 file (keep faults option only). **After** vehicle maintenance: Read the electronic modules with BUDS2 Compare the fault code(s) before and after the maintenance using the printed copy and the current reading. Investigate only the newly fault codes. Clear all occurred faults
Sensor "Active" fault	Read the fault description in BUDS2
Low system voltage on one module. Power problem on sensor(s)	Check related fuse(s) and relay. Check related power and ground wires. Check for common power supply to several sensors/modules (refer to *POWER DISTRIBUTION AND GROUNDS)*. NOTE: Some sensors are supplied by the battery while others are supplied by a module.
Low system voltage on several modules (several communication faults will also appear)	Check battery condition and connections. Check related fuse(s) and relay. Check voltage regulator/rectifier.
High system voltage on several modules	A battery charger has likely been used to substitute the vehicle battery. Clear all occurred faults and check again. Check voltage regulator/rectifier.
When all modules report that a module is missing	Check the module that is reported as missing. Check related fuse(s) and relay. Check related power and ground wires.

GENERAL GUIDELINES TO SOLVE FAULT CODES	
CONDITION	ACTION
When several modules are in fault	Search for a common problem such as a faulty sensor.
CAN buss OFF	When several modules and sensors report that a module is missing. The missing module may report CAN bus off. Check related CAN wires (continuity, short to ground, short between CAN low and high). Check module pins and wiring terminals. Then, the other modules should stop reporting that module is missing.
Occurred fault(s)	May have been generated due to a system or component that was momentarily operating outside normal parameters.
	May be generated when disconnecting and reconnecting a component, replacing a burnt fuse, or may be due to a momentary high or low voltage.
	Before being "Occurred", a fault has always been "Active" for a certain time, indicating that an unexpected condition or problem has been present during the driving cycle. A frequent momentarily fault or an intermittent fault may never be seen as "Active" in BUDS2 while there is still a pending problem. This type of malfunctions can be discovered by looking at the "Occurred" faults and then by evaluating the fault count. As long as a fault is present, it is displayed as "Active".
Fault count (0 - 255)	Low value: Suggests handling problems (connections, terminal contact/ shape etc.). High value: Suggests a frequent and unsolved problem. The problem should be investigated.
Fault conditions	Look for abnormal, excessive values.
Hard to find problems	When the basic troubleshooting has been done and the fault code(s) persists, often the problem is related to the wiring harness, connections or electromechanical components. Short to ground, to battery or between wires. Wire splices, chafing, terminal problems (pulled out, bent, out of shape, corroded etc.). Bad contacts in switch or relay.

ECUs share information and their systems may interact with each other. Certain faults may cause more than one ECU to set a fault code or indication (pilot lamp or message) as the failure of some components may affect the operation of several systems.

SPECIFIC FAULTS

TPS Fault

A TPS fault may be considered to be a major fault as the TPS provides the most important feedback (2 signals) to the ECM on throttle position.

A TPS fault affects engine control as the throttle plate is moved by the ETA (electric throttle actuator) which, is controlled by the ECM (see *INTELLIGENT THROTTLE CONTROL (ITC)* subsection).

A TPS fault is generally followed by LIMP HOME mode and the engine is brought back to idle, or may be completely shutdown.

Low Battery Voltage Fault

If the battery voltage is low when the engine is running at idle RPM, the ECM will command an increase in RPM to a set value, thereby increasing the charging system output in order to prevent the battery from being discharged, and to allow normal system operation.

TAS Fault

If one TAS (throttle accelerator sensor) signal is missing, LIMP HOME MODE will be activated and the check engine light will come ON. Pressing and holding the OVERRIDE button will allow normal control of the accelerator pedal.

If both sensors in the TAS are at fault, a TAS FAULT message will appear in the gauge, the check engine light will come ON and the engine will run at idle. The accelerator pedal will not have any affect on engine RPM. However, the vehicle may be driven in LIMP HOME MODE by pressing the OVERRIDE button.

When limp home mode is engaged using the override button, a MANUAL LIMP HOME message will appear in the gauge. The OVERRIDE button can then be used as the accelerator, vehicle speed is controlled by pressing and/or releasing the button.

BRAKE ACTIVATION Fault Message in Gauge

If a brake signal is received continuously for 15 seconds above 5 km/h (3 MPH), a BRAKE message will be displayed in the gauge.

DIAGNOSTIC AND FAULT CODES

GENERAL

FAULT CODE TABLE

PCODE	MODULE	DESCRIPTION	CAUSE	ACTION
C0051	DPS GLOBE	ROTOR ENCODER SPI COM FAIL	internal comm fail error or damaged DPS	change dps if condition still active after key-on cycle
C0052	DPS GLOBE	ROTOR INCODER VARIANCE	internal INCODER fail or damaged DPS	change dps if condition still active after key-on cycle
C1203	DPS GLOBE	TORQUE SENSOR OUT OF RANGE	internal error or damaged DPS	change dps if condition still active after key-on cycle
C1304	DPS GLOBE	TORQUE SENSOR LINEARITY CHECK FAIL	internal error or damaged DPS	change dps if condition still active after key-on cycle
C1309	DPS GLOBE	TEMPERATURE HIGH	DPS temp upper range due to excessive use of DPS	verify with customer condition when dps ovr show-up
C1310	DPS GLOBE	TEMPERATURE OVER	DPS temp exceed due to excessive use of DPS	verify with customer condition when dps ovr show-up
C1318	DPS GLOBE	SEPIC LOW	internal error or damaged DPS	change DPS
C1319	DPS GLOBE	SEPIC HIGH	internal error or damaged DPS	change DPS
C2109	SCM	Release Valve Activation delay Exceed	If pressure threshold not reach after calibrated time delay (When release valve activated)	Open SCM Activation page in BUDS, performe a combined test in System self test sequence section
C210A	SCM	Suspension Valve Activation time Exceed	If the suspension valve maximum allowed activation time in a specific time window is exceeded for (counter > CntExceed).	Open SCM Activation page in BUDS, performe a combined test in System self test sequence section
C210B	SCM	Outlet Valve Activation time Exceed	If the suspension valve maximum allowed activation time in a specific time window is exceeded for (counter > CntExceed).	Open SCM Activation page in BUDS, performe a combined test in System self test sequence section
C2111	SCM	Pressure sensor signal Invalid	Sensor input voltage < 0.5V for hardcoded debounce time	Open SCM Activation page in BUDS, performe a pressure sensor test in System self test sequence section

PCODE	MODULE	DESCRIPTION	CAUSE	ACTION
C21D0	SCM	Pressure threshold not Reach outlet adjustment	If pressure threshold not reach after calibrated time delay (threshold change in function of compressor temperature) (When outlet pressure adjustment activated)	Open SCM Activation page in BUDS, performe a combined test in System self test sequence section
C21D2	SCM	Compressor over temperature condition	If over temp threshold reach for time delay	Open SCM Activation page in BUDS, performe a pressure test in System self test sequence section
C21D3	SCM	Over pressure detected	If pressure > 350PSI	Open SCM Activation page in BUDS, performe a pressure sensor test in System self test sequence section
C21E0	SCM	Pressure threshold not reach Rear suspension adjustment	If pressure threshold not reach after calibrated time delay (threshold change in function of compressor temperature) (When Rear suspension adjustment activated)	Open SCM Activation page in BUDS, performe a combined test in System self test sequence section
C21E1	SCM	Air Leak Plausibility check Rear suspension	If maximum number of readjustment for rear suspension is reach	Open SCM Activation page in BUDS, performe a combined test in System self test sequence section
C21F0	SCM	Pressure threshold not reach Front suspension adjustment	If pressure threshold not reach after calibrated time delay (threshold change in function of compressor temperature) (When front suspension adjustment activated)	Open SCM Activation page in BUDS, performe a combined test in System self test sequence section
C21F3	SCM	Air Leak Plausibility check Front Right suspension	If maximum number of readjustment for front right suspension is reach	Open SCM Activation page in BUDS, performe a combined test in System self test sequence section
C21F4	SCM	Air Leak Plausibility check Front left suspension	If maximum number of readjustment for front left suspension is reach	Open SCM Activation page in BUDS, performe a combined test in System self test sequence section

PCODE	MODULE	DESCRIPTION	CAUSE	ACTION
P0030	ECM	Internal fault path number for Signal error : power stage of heater of Sensor upstream catalyst	Damaged O2 sensor, damaged circuit wires, damaged connector or damaged ECM output pins.	Check related fuse(s) Disconnect the 1st oxygen sensor (FRONT cylinder) and measure his resistance (Expected value: 7 to 12 Ohms) Measure the voltage of the harness power wire relative to ground (Expected value: Battery voltage) Disconnect the associated ECM connector and measure resistance between harness wires and ground (Expected value: open) Measure the resistance of the harness wires, between the ECM and sensor connectors (Expected value < 2 Ohms)
P0031	ECM	Internal fault path number for Min error : power stage of heater of Sensor upstream catalyst	Damaged O2 sensor, damaged circuit wires,damaged connector or damaged ECM output pins.	Check related fuse(s) Disconnect the 1st oxygen sensor (FRONT cylinder) and measure his resistance (Expected value: 7 to 12 Ohms) Measure the voltage of the harness power wire relative to ground (Expected value: Battery voltage) Disconnect the associated ECM connector and measure resistance between harness wires and ground (Expected value: open) Measure the resistance of the harness wires, between the ECM and sensor connectors (Expected value < 2 Ohms)

PCODE	MODULE	DESCRIPTION	CAUSE	ACTION
P0032	ECM	Internal fault path number for Max error: power stage of heater of Sensor upstream catalyst	Damaged O2 sensor, damaged circuit wires,damaged connector or damaged ECM output pins.	Check related fuse(s) Disconnect the 1st oxygen sensor (FRONT cylinder) and measure his resistance (Expected value: 7 to 12 Ohms) Measure the voltage of the harness power wire relative to ground (Expected value: Battery voltage) Disconnect the associated ECM connector and measure resistance between harness wires and ground (Expected value: open) Measure the resistance of the harness wires, between the ECM and sensor connectors (Expected value < 2 Ohms)
P0037	ECM	Internal fault path number for Min error : power stage of heater of Sensor upstream catalyst, LSU 2	Blown fuse, damaged or disconnected O2 sensor, damaged or disconnected circuit wires, damaged ECM output pins.	Check related fuse(s) Disconnect the 2nd oxygen sensor (REAR cylinder) and measure his resistance (Expected value: 7 to 12 Ohms) Measure the voltage of the harness power wire relative to ground (Expected value: Battery voltage) Disconnect the associated ECM connector and measure resistance between harness wires and ground (Expected value: open) Measure the resistance of the harness wires, between the ECM and sensor connectors (Expected value < 2 Ohms)

PCODE	MODULE	DESCRIPTION	CAUSE	ACTION
P0038	ECM	Internal fault path number for Max error: power stage of heater of Sensor upstream catalyst, LSU 2	Blown fuse, damaged or disconnected O2 sensor, damaged or disconnected circuit wires, damaged ECM output pins.	Check related fuse(s) Disconnect the 2nd oxygen sensor (REAR cylinder) and measure his resistance (Expected value: 7 to 12 Ohms) Measure the voltage of the harness power wire relative to ground (Expected value: Battery voltage) Disconnect the associated ECM connector and measure resistance between harness wires and ground (Expected value: open) Measure the resistance of the harness wires, between the ECM and sensor connectors (Expected value < 2 Ohms)
P0106	ECM	Manifold Absolute Pressure circuit range/performance	Damaged sensor, damaged circuit wires, damaged connector or damaged ECM pins, ECM voltage supply	Make sure sensor connector is well inserted Disconnect the sensor, measure the voltage of the harness power wires (Expected value: 4.8 to 5.1 Volts) Measure the resistance of the harness wires, between the ECM and sensor connectors (Expected value < 2 Ohms)
P0107	ECM	Manifold Air Pressure Sensor voltage too Low	Damaged sensor, damaged circuit wires, damaged connector or damaged ECM pins, ECM voltage supply Low	Make sure sensor connector is well inserted Disconnect the sensor, measure the voltage of the harness power wires (Expected value: 4.8 to 5.1 Volts) Measure the resistance of the harness wires, between the ECM and sensor connectors (Expected value < 2 Ohms)

PCODE	MODULE	DESCRIPTION	CAUSE	ACTION
P0108	ECM	Manifold Air Pressure Sensor voltage too High	Damaged sensor, wires shorted to battery +, ECM voltage supply too High.	Make sure sensor connector is well inserted Disconnect the sensor, measure the voltage of the harness power wires (Expected value: 4.8 to 5.1 Volts) Measure the resistance of the harness wires, between the ECM and sensor connectors (Expected value < 2 Ohms)
P0112	ECM	Intake Air Temperature Sensor 1 circuit Low	Damaged sensor, damaged circuit wires, damaged connector or damaged ECM pins, ECM voltage supply Low	Make sure sensor connector is well inserted Disconnect the sensor, measure the voltage of the harness power wires (Expected value: 4.8 to 5.1 Volts) Measure the resistance of the harness wires, between the ECM and sensor connectors (Expected value < 2 Ohms)
P0113	ECM	Intake Air Temperature Sensor 1 circuit High	Damaged sensor, wires shorted to battery +, ECM voltage supply too High.	Make sure sensor connector is well inserted Disconnect the sensor, measure the voltage of the harness power wires (Expected value: 4.8 to 5.1 Volts) Measure the resistance of the harness wires, between the ECM and sensor connectors (Expected value < 2 Ohms)

PCODE	MODULE	DESCRIPTION	CAUSE	ACTION
P0116	ECM	Engine Coolant Temperature Sensor 1 circuit range/performance	Damaged sensor, wires shorted to battery +, ECM voltage supply.	Disconnect the sensor and check for a change in the fault code. If the fault code stays the same, look for a short circuit on the harness. If the fault code is different, replace the sensor Measure the sensor resistance (Expected value: 2280 to 2736 Ohms at 19 to 21°C (66 to 70°F)) Measure the resistance of the harness wires, between the ECM and sensor connectors (Expected value < 2 Ohms)
P0117	ECM	Engine Coolant Temperature Sensor 1 circuit Low	Engine temperature sensor or circuit wires shorted to ground.	Disconnect the sensor and check for a change in the fault code. If the fault code stays the same, look for a short circuit on the harness. If the fault code is different, replace the sensor Measure the sensor resistance (Expected value: 2280 to 2736 Ohms at 19 to 21°C (66 to 70°F)) Measure the resistance of the harness wires, between the ECM and sensor connectors (Expected value < 2 Ohms)
P0118	ECM	Engine Coolant Temperature Sensor 1 circuit High	Disconnected sensor, or sensor resistance too High.	Make sure sensor connector is well inserted Measure the sensor resistance (Expected value: 2280 to 2736 Ohms at 19 to 21°C (66 to 70°F)) Measure the resistance of the harness wires, between the ECM and sensor connectors (Expected value < 2 Ohms)

PCODE	MODULE	DESCRIPTION	CAUSE	ACTION
P0122	ECM	First Throttle Accelerator Sensor (TAS) Short circuit to GND	Damaged circuit wires, damaged sensor or damaged ECM pins.	Make sure sensor connector is well inserted Measure the resistance of the harness wires, between the ECM and sensor connectors (Expected value < 2 Ohms)
P0123	ECM	First Throttle Accelerator Sensor (TAS) shorted to battery +	Damaged circuit wires, damaged sensor or damaged ECM pins.	Make sure sensor connector is well inserted Measure the resistance of the harness wires, between the ECM and sensor connectors (Expected value < 2 Ohms)
P0127	ECM	Intake Air Temperature too High	Air Temperature in intake High	
P0130	ECM	ECU int. fault path no.: electrical diagnosis for lambda sensor upstream catalyst. npl-error	Damaged O2 sensor, damaged circuit wires, damaged connector or damaged ECM output pins.	Check related fuse(s) Disconnect the 1st oxygen sensor (FRONT cylinder) and measure his resistance (Expected value: 7 to 12 Ohms) Measure the voltage of the harness power wire relative to ground (Expected value: Battery voltage) Disconnect the associated ECM connector and measure resistance between harness wires and ground (Expected value: open) Measure the resistance of the harness wires, between the ECM and sensor connectors (Expected value < 2 Ohms)

PCODE	MODULE	DESCRIPTION	CAUSE	ACTION
P0131	ECM	ECU int. fault path no.: electrical diagnosis for lambda sensor upstream cat. min-error	Damaged O2 sensor, damaged circuit wires, damaged connector or damaged ECM output pins.	Check related fuse(s) Disconnect the 1st oxygen sensor (FRONT cylinder) and measure his resistance (Expected value: 7 to 12 Ohms) Measure the voltage of the harness power wire relative to ground (Expected value: Battery voltage) Disconnect the associated ECM connector and measure resistance between harness wires and ground (Expected value: open) Measure the resistance of the harness wires, between the ECM and sensor connectors (Expected value < 2 Ohms)
P0132	ECM	ECU int. fault path no.: electrical diagnosis for lambda sensor upstream cat. max-error	Damaged O2 sensor, damaged circuit wires, damaged connector or damaged ECM output pins.	Check related fuse(s) Disconnect the 1st oxygen sensor (FRONT cylinder) and measure his resistance (Expected value: 7 to 12 Ohms) Measure the voltage of the harness power wire relative to ground (Expected value: Battery voltage) Disconnect the associated ECM connector and measure resistance between harness wires and ground (Expected value: open) Measure the resistance of the harness wires, between the ECM and sensor connectors (Expected value < 2 Ohms)

Midwest Manuals
Green Manuals
Paperless Manuals
For a Better Tomorrow
If you bought this manual from any other seller please leave them NEGATIVE feedback and notify me at bestshopmanuals@gmail.com

PCODE	MODULE	DESCRIPTION	CAUSE	ACTION
P0133	ECM	ECU int. fault path no.: diagnosis lambda sensor upstream catalyst	Damaged O2 sensor, damaged circuit wires, damaged connector or damaged ECM output pins.	Check related fuse(s) Disconnect the 1st oxygen sensor (FRONT cylinder) and measure his resistance (Expected value: 7 to 12 Ohms) Measure the voltage of the harness power wire relative to ground (Expected value: Battery voltage) Disconnect the associated ECM connector and measure resistance between harness wires and ground (Expected value: open) Measure the resistance of the harness wires, between the ECM and sensor connectors (Expected value < 2 Ohms)
P0135	ECM	ECU int. fault path no.: lambda sensor heating upstream cat.	Damaged O2 sensor, damaged circuit wires, damaged connector or damaged ECM output pins.	Check related fuse(s) Disconnect the 1st oxygen sensor (FRONT cylinder) and measure his resistance (Expected value: 7 to 12 Ohms) Measure the voltage of the harness power wire relative to ground (Expected value: Battery voltage) Disconnect the associated ECM connector and measure resistance between harness wires and ground (Expected value: open) Measure the resistance of the harness wires, between the ECM and sensor connectors (Expected value < 2 Ohms)

PCODE	MODULE	DESCRIPTION	CAUSE	ACTION
P0136	ECM	ECU int. fault path no.: electrical diagnosis for second lambda sensor upstream cat. npl-error	Damaged O2 sensor, damaged circuit wires, damaged connector or damaged ECM output pins.	Check related fuse(s) Disconnect the 2nd oxygen sensor (REAR cylinder) and measure his resistance (Expected value: 7 to 12 Ohms) Measure the voltage of the harness power wire relative to ground (Expected value: Battery voltage) Disconnect the associated ECM connector and measure resistance between harness wires and ground (Expected value: open) Measure the resistance of the harness wires, between the ECM and sensor connectors (Expected value < 2 Ohms)
P0137	ECM	ECU int. fault path no.: electrical diagnosis for second lambda sensor upstream cat. min-error	Damaged O2 sensor, damaged circuit wires, damaged connector or damaged ECM output pins.	Check related fuse(s) Disconnect the 2nd oxygen sensor (REAR cylinder) and measure his resistance (Expected value: 7 to 12 Ohms) Measure the voltage of the harness power wire relative to ground (Expected value: Battery voltage) Disconnect the associated ECM connector and measure resistance between harness wires and ground (Expected value: open) Measure the resistance of the harness wires, between the ECM and sensor connectors (Expected value < 2 Ohms)

PCODE	MODULE	DESCRIPTION	CAUSE	ACTION
P0138	ECM	ECU int. fault path no.: electrical diagnosis for second lambda sensor upstream cat. max-error	Damaged O2 sensor, damaged circuit wires, damaged connector or damaged ECM output pins.	Check related fuse(s) Disconnect the 2nd oxygen sensor (REAR cylinder) and measure his resistance (Expected value: 7 to 12 Ohms) Measure the voltage of the harness power wire relative to ground (Expected value: Battery voltage) Disconnect the associated ECM connector and measure resistance between harness wires and ground (Expected value: open) Measure the resistance of the harness wires, between the ECM and sensor connectors (Expected value < 2 Ohms)
P0139	ECM	ECU int. fault path no.: diagnosis lambda sensor upstream catalyst (exhaust bank2)	Damaged O2 sensor, damaged circuit wires, damaged connector or damaged ECM output pins.	Check related fuse(s) Disconnect the 2nd oxygen sensor (REAR cylinder) and measure his resistance (Expected value: 7 to 12 Ohms) Measure the voltage of the harness power wire relative to ground (Expected value: Battery voltage) Disconnect the associated ECM connector and measure resistance between harness wires and ground (Expected value: open) Measure the resistance of the harness wires, between the ECM and sensor connectors (Expected value < 2 Ohms)

PCODE	MODULE	DESCRIPTION	CAUSE	ACTION
P0141	ECM	ECU int. fault path no.: lambda sensor heating upstream cat.	Damaged O2 sensor, damaged circuit wires, damaged connector or damaged ECM output pins.	Check related fuse(s) Disconnect the 2nd oxygen sensor (REAR cylinder) and measure his resistance (Expected value: 7 to 12 Ohms) Measure the voltage of the harness power wire relative to ground (Expected value: Battery voltage) Disconnect the associated ECM connector and measure resistance between harness wires and ground (Expected value: open) Measure the resistance of the harness wires, between the ECM and sensor connectors (Expected value < 2 Ohms)
P0201	ECM	Power stage sig error injector 2	ECM injector power stage error	Open ECM ACTIVATION page in BUDS. Activate injector and check if injector is reacting as expected
P0202	ECM	Power stage sig error injector 1	ECM injector power stage error	Open ECM ACTIVATION page in BUDS. Activate injector and check if injector is reacting as expected
P0217	ECM	Engine Coolant over temperature condition	Coolant fluid temperature too high	Check for coolant fluid leak and coolant fluid level Check radiator condition Check for other fault, Check thermostat
P0222	ECM	2nd Throttle Accelerator Sensor (TAS) shorted to GND	Damaged circuit wires, damaged sensor, or damaged ECM pins.	Make sure sensor connector is well inserted Measure the resistance of the harness wires, between the ECM and sensor connectors (Expected value < 2 Ohms)

PCODE	MODULE	DESCRIPTION	CAUSE	ACTION
P0223	ECM	2nd Throttle Accelerator Sensor (TAS) shorted to battery +	Damaged circuit wires, damaged sensor, or damaged ECM pins.	Make sure sensor connector is well inserted Measure the resistance of the harness wires, between the ECM and sensor connectors (Expected value < 2 Ohms)
P0231	ECM	Fuel Pump circuit shorted to ground, or open circuit	Blown fuse, damaged or disconnected fuel pump, damaged circuit wires, damaged connectors or damaged ECM output pins.	Check related fuse(s) Disconnect the fuel pump and measure his winding resistance (Expected value < 2 Ohms) Measure the voltage of the harness power wire relative to ground (Expected value: Battery voltage) Disconnect the associated ECM connector Measure the resistance of the harness wire, between the ECM and fuel pump connectors (Expected value < 2 Ohms)
P0232	ECM	Fuel Pump circuit shorted to battery +	Damaged fuel pump, damaged circuit wires, damaged connectors or damaged ECM output pins.	Check related fuse(s) Disconnect the fuel pump and measure his winding resistance (Expected value < 2 Ohms) Measure the voltage of the harness power wire relative to ground (Expected value: Battery voltage) Disconnect the associated ECM connector Measure the resistance of the harness wire, between the ECM and fuel pump connectors (Expected value < 2 Ohms)

PCODE	MODULE	DESCRIPTION	CAUSE	ACTION
P0261	ECM	Cylinder 1 injector open circuit or shorted to ground	Blown fuse, damaged or disconnected injector, damaged or disconnected circuit wires, damaged ECM output pins.	Check related fuse(s) Disconnect injector 1 and measure his resistance (Expected value: 14 to 15 Ohms) Measure the voltage of the harness power wire relative to ground (Expected value: Battery voltage) Disconnect the associated ECM connector Measure the resistance of the harness wire, between the ECM and injector 1 connectors (Expected value < 2 Ohms) Check if HIC connector is connecting the engine harness to the vehicle harness
P0262	ECM	Cylinder 1 injector shorted to battery +	Damaged injector, damaged circuit wires, damaged connector or damaged ECM output pins.	Check related fuse(s) Disconnect injector 1 and measure his resistance (Expected value: 14 to 15 Ohms) Measure the voltage of the harness power wire relative to ground (Expected value: Battery voltage) Disconnect the associated ECM connector Verify the isolation between harness injectors signals (Expected value: open) Measure the resistance of the harness wire, between the ECM and injector 1 connectors (Expected value < 2 Ohms) Check if HIC connector is connecting the engine harness to the vehicle harness

PCODE	MODULE	DESCRIPTION	CAUSE	ACTION
P0264	ECM	Cylinder 2 injector open circuit or shorted to ground	Blown fuse, damaged or disconnected injector, damaged or disconnected circuit wires, damaged ECM output pins.	Check related fuse(s) Disconnect injector 2 and measure his resistance (Expected value: 14 to 15 Ohms) Measure the voltage of the harness power wire relative to ground (Expected value: Battery voltage) Disconnect the associated ECM connector Measure the resistance of the harness wire, between the ECM and injector 2 connectors (Expected value < 2 Ohms) Check if HIC connector is connecting the engine harness to the vehicle harness
P0265	ECM	Cylinder 2 injector shorted to battery +	Damaged injector, damaged circuit wires, damaged connector or damaged ECM output pins.	Check related fuse(s) Disconnect injector 2 and measure his resistance (Expected value: 14 to 15 Ohms) Measure the voltage of the harness power wire relative to ground (Expected value: Battery voltage) Disconnect the associated ECM connector Verify the isolation between harness injectors signals (Expected value: open) Measure the resistance of the harness wire, between the ECM and injector 2 connectors (Expected value < 2 Ohms) Check if HIC connector is connecting the engine harness to the vehicle harness
P0324	ECM	Diagnostic Fault Code for min error of knock sensor	Damaged knock sensor, damaged circuit wires, damaged connector or damaged ECM output pins.	Make sure sensor connector is fully inserted and check knock system.

PCODE	MODULE	DESCRIPTION	CAUSE	ACTION
P032A	ECM	Diagnostic Fault Code for min error of knock sensor	Damaged knock sensor, damaged circuit wires, damaged connector or damaged ECM output pins.	Make sure sensor connector is fully inserted and check knock system.
P0335	ECM	Crankshaft Position Sensor	Damaged CPS, damaged circuit wires, damaged connector or damaged ECM output pins.	Make sure sensor connector is well inserted Disconnect the associated ECM connector Measure the resistance of the harness wires, between the ECM and sensor connectors (Expected value < 2 Ohms)
P0359	ECM	Ignition coil	Damaged ignition coil, damaged circuit wires, damaged connector or damaged ECM output pins.	Open the ECM Activation page in BUDS Perform an ignition coil activation and check if ignition coil is reacting as expected Check related fuse(s) Measure the voltage of the harness power wire relative to ground (Expected value: Battery voltage) Disconnect the associated ECM connector Measure the resistance of the harness wires, between the ECM and tested device connectors (Expected value < 2 Ohms) Check if HIC connector is connecting the engine harness to the vehicle harness Refer to the service manual for detailed ignition coil testing procedure

PCODE	MODULE	DESCRIPTION	CAUSE	ACTION
P0360	ECM	Ignition coil	Damaged ignition coil, damaged circuit wires, damaged connector or damaged ECM output pins.	Open the ECM Activation page in BUDS Perform an ignition coil activation and check if ignition coil is reacting as expected Check related fuse(s) Measure the voltage of the harness power wire relative to ground (Expected value: Battery voltage) Disconnect the associated ECM connector Measure the resistance of the harness wires, between the ECM and tested device connectors (Expected value < 2 Ohms) Check if HIC connector is connecting the engine harness to the vehicle harness Refer to the service manual for detailed ignition coil testing procedure
P0361	ECM	Ignition coil range/performance	Damaged ignition coil, damaged circuit wires, damaged connector or damaged ECM output pins.	Open the ECM Activation page in BUDS Perform an ignition coil activation and check if ignition coil is reacting as expected Check related fuse(s) Measure the voltage of the harness power wire relative to ground (Expected value: Battery voltage) Disconnect the associated ECM connector Measure the resistance of the harness wires, between the ECM and tested device connectors (Expected value < 2 Ohms) Check if HIC connector is connecting the engine harness to the vehicle harness Refer to the service manual for detailed ignition coil testing procedure

PCODE	MODULE	DESCRIPTION	CAUSE	ACTION
P0362	ECM	Ignition coil range/performance	Damaged ignition coil, damaged circuit wires, damaged connector or damaged ECM output pins.	Open the ECM Activation page in BUDS Perform an ignition coil activation and check if ignition coil is reacting as expected Check related fuse(s) Measure the voltage of the harness power wire relative to ground (Expected value: Battery voltage) Disconnect the associated ECM connector Measure the resistance of the harness wires, between the ECM and tested device connectors (Expected value < 2 Ohms) Check if HIC connector is connecting the engine harness to the vehicle harness Refer to the service manual for detailed ignition coil testing procedure
P0480	ECM	Radiator cooling fan relay	Blown fuse, damaged or disconnected relay, damaged circuit wires or connectors, damaged ECM output pins, damaged Relay.	Check related fuse(s) Disconnect relay and measure his coil resistance (Expected value: 70 to 90 Ohms) Disconnect the associated ECM connector and measure resistance between harness wires and ground (Expected value: open) Measure the resistance of the harness wire, between the ECM and tested device connectors (Expected value < 2 Ohms)

PCODE	MODULE	DESCRIPTION	CAUSE	ACTION
P0500	DPS	Invalid or missing vehicle speed	No vehicle speed available & Vehicle is in (H or L Gear) with Engine RPM over 4000RPM. Damaged Vehicle Speed sensor circuit, Damaged sensor, Wrong mounting position of speed sensor.	Check if vehicle speed is available in BUDS Monitoring page Check related fuse(s) Disconnect the sensor, measure the voltage of the harness power wire relative to ground (Expected value: Battery voltage) Measure the resistance of the harness wires, between the ECM and sensor connectors (Expected value < 5 Ohms)
P0501	ECM	Vehicle speed not plausible	Vehicle speed correlation check failed	Check if vehicle speed is available in Monitoring page in BUDS Check related fuse(s) Disconnect the sensor, measure the voltage of the harness power wire relative to ground (Expected value: Battery voltage) Measure the resistance of the harness wires, between the ECM and sensor connectors (Expected value < 5 Ohms)
P0504	ECM	Brake signal not plausible	Brake signal correlation check failed	Open the ECM Monitoring page in BUDS. Check fuse Press on brake pedal. Ensure that brake switch light comes on ECM Monitoring page
P0512	ECM	Starter control circuit	Damaged or disconnected relay, damaged circuit wires, damaged connectors or damaged ECM output pins.	Measure voltage between harness connector SS1 and ground (Expected value: 11 to 13 volts) Measure resistance from connector: ECMB-L4 to SS2 (Expected value: < 2 ohms)
P0513	ECM	Invalid Access Key Detected	A non stored access key was detected when key switch was turned to ON.	Use a stored access key to turn key switch. If no stored access keys are available program one and try again

Midwest Manuals
Green Manuals
Paperless Manuals For a Better Tomorrow
If you bought this manual from any other seller please leave them NEGATIVE feedback and notify me at bestshopmanuals@gmail.com

PCODE	MODULE	DESCRIPTION	CAUSE	ACTION
P0520	ECM	Engine oil pressure sensor circuit malfunction	Damaged switch, damaged circuit wires, damaged connector, damaged ECM pins.	Measure resistance between harness connector EOP and ground When engine stopped. (Expected value < 2 Ohms) Measure resistance between harness connector EOP and ground When engine running. (Expected value = open) Measure resistance from harness connector: EOP to ECMA-E3 (Expected value: < 2 Ohms) Check if HIC connector is properly connected (engine harness to the vehicle harness).
P0523	ECM	Engine oil pressure sensor sticking	Damaged switch, damaged circuit wires, damaged connector, damaged ECM pins.	Measure resistance between harness connector EOP and ground When engine stopped. (Expected value < 2 Ohms) Measure resistance between harness connector EOP and ground When engine running. (Expected value = open) Measure resistance from harness connector: EOP to ECMA-E3 (Expected value: < 2 Ohms) Check if HIC connector is properly connected (engine harness to the vehicle harness).

PCODE	MODULE	DESCRIPTION	CAUSE	ACTION
P0524	ECM	Engine oil pressure too Low	Damaged switch, damaged circuit wires, damaged connector, damaged ECM pins.	Measure resistance between harness connector EOP and ground When engine stopped. (Expected value < 2 Ohms) Measure resistance between harness connector EOP and ground When engine running. (Expected value = open) Measure resistance from harness connector: EOP to ECMA-E3 (Expected value: < 2 Ohms) Check if HIC connector is properly connected (engine harness to the vehicle harness)
P0551	DPS	TORQUE_SENSOR_ OPEN	Damaged DPS	External troubleshooting is not possible Clear the Fault. If Fault becomes Active Replace the DPS
P0552	DPS	TORQUE_SENSOR_ SHORT_GND	Damaged DPS	External troubleshooting is not possible Clear the Fault. If Fault becomes Active Replace the DPS
P0553	DPS	TORQUE_SENSOR_ SHORT_5V	Damaged DPS	External troubleshooting is not possible Clear the Fault. If Fault becomes Active Replace the DPS
P0560	ECM	Non-plausibility error on system voltage	Battery failure, voltage regulator failure, damaged circuit wires or connection, damaged magneto generator. An external battery charger may have been used.	Measure battery voltage with engine stopped. (Expected value: 11 to 13 volts) Measure battery voltage with engine running. (Expected value: 13 to 14.7 volts) Check connections on voltage regulator. Check ground and positive connections on battery. Check ground on vehicle frame

PCODE	MODULE	DESCRIPTION	CAUSE	ACTION
P0562	DPS	System voltage low	Blown fuse, battery low (damaged magneto/regulator), damaged circuit wires or connection, Intense usage of WINCH	Check related fuse(s) Measure battery voltage with engine stopped (Expected value: 11 to 13 Volts) Check ground and positive connections on battery Validate that all the DPS connectors are secured On the DPS power connector, measure the voltage between the two harness wires (Expected value: Battery voltage)
P0562	DPS GLOBE	BATTERY LOW	Battery low (damaged magneto/regulator), damaged circuit wires or connection. Intense usage of WINCH	Measure battery voltage with engine stopped (Expected value: 11 to 13 Volts) Check ground and positive connections on battery Validate that all the DPS connectors are secured On the DPS power connector pins, measure the voltage between the two harness power wires (Expected value: Battery voltage) Measure the resistance of the harness wire, between the DPS power connector and ground (Expected value < 2 Ohms)
P0562	ECM	System voltage low	Blown fuse FC, battery failure, voltage regulator failure, damaged circuit wires or connection, damaged magneto generator. An external battery charger may have been used. Intense usage of WINCH	Measure battery voltage with engine stopped. (Expected value: 11 to 13 volts) Measure battery voltage with engine running. (Expected value: 13 to 14.7 volts) Check connections on voltage regulator. Check ground and positive connections on battery. Check ground on vehicle frame

PCODE	MODULE	DESCRIPTION	CAUSE	ACTION
P0563	DPS	system voltage high	Rectifier failure, damaged circuit wires or connection.	Measure battery voltage with engine stopped. (Expected value: 11 to 13 volts) Measure battery voltage with engine Running at 3500RPM. (Expected value: 13 to 14.7 volts) Check connections on voltage regulator. Check ground and positive connections on battery.
P0563	DPS GLOBE	BATTERY HIGH	Rectifier failure, damaged circuit wires or connection./ Improper battery charger could raise that fault	Measure battery voltage with engine stopped. (Expected value: 11 to 13 volts) Measure battery voltage with engine Running at 3500RPM. (Expected value: 13 to 14.7 volts) Check connections on voltage regulator. Check ground and positive connections on battery.
P0563	ECM	System voltage high	Damaged regulator. An external battery charger may have been used.	Measure battery voltage with engine stopped. (Expected value: 11 to 13 volts) Measure battery voltage with engine running. (Expected value: 13 to 14.7 volts) Check connections on voltage regulator. Check ground and positive connections on battery. Check ground on vehicle frame
P0601	DPS	CALIBRATION FAULT	DPS not calibrated or damage DPS	Try updating the DPS
P0601	SCM	SCM calibration fault	Calibration Checksum err	Update SCM
P0602	DPS GLOBE	Manufacturing CRC Programming Error	Internal error or damaged DPS	change dps if condition always active
P0605	SCM	EEPROM COMMUNICATION FAULT	Last minute memory or last modes memory check	External troubleshooting is not possible Check for communication fault using BUDS
P0606	DPS GLOBE	Application CRC(boot)	Application CRC(boot)	reflash DPS

PCODE	MODULE	DESCRIPTION	CAUSE	ACTION
P0606	ECM	Control Module Processor	Faulty calibration Faulty programming Damaged ECM	Try updating the ECM calibration If the problem persists, reflash ECM If the problem persists, replace the ECM.
P0607	DPS GLOBE	Boot Count(boot)	Battery low (damaged magneto/regulator), damaged circuit wires or connection. Intense usage of WINCH	Measure battery voltage with engine stopped (Expected value: 11 to 13 Volts) Check ground and positive connections on battery Validate that all the DPS connectors are secured On the DPS power connector, measure the voltage between the two harness power wires (Expected value: Battery voltage)
P060D	ECM	Throttle Accelerator Sensor (TAS) synchronistic error between sensor 1 and 2	Throttle Accelerator Sensors (TAS) plausibility check error	Make sure sensor connector is well inserted Disconnect the associated ECM connector Measure the resistance of the harness wires, between the ECM and sensor connectors (Expected value < 2 Ohms)
P060E	ECM	Throttle position performance	TPS plausibility check error	Disconnect the associated ECM connector Measure the resistance of the harness wires, between the ECM and sensor connectors (Expected value < 2 Ohms)
P0610	ECM	Variant Coding error	Faulty variant coding Faulty programming Wrong ECM after replacement	Try updating the ECM variant or calibration If the problem persists, reflash ECM If the problem persists, replace ECM.
P062F	DPS GLOBE	EEPROM SPI	internal error or damaged DPS, EEPROM SPI	change dps if condition still active after key-on cycle external troobleshooting not possible

PCODE	MODULE	DESCRIPTION	CAUSE	ACTION
P062F	ECM	Internal control module EEPROM error	Faulty calibration or variant Faulty programming Damaged ECM	Try updating the ECM variant or calibration If the problem persists, reflash ECM If the problem persists, replace ECM.
P0635	DPS GLOBE	EXCESSIVE ERROR CURRENT	internal error or damaged DPS	change DPS
P0636	DPS	MOTOR LOW CURRENT FAULT	Internal error or damaged DPS	External troubleshooting is not possible Clear the Fault. If Fault becomes Active Replace the DPS
P0637	DPS	MOTOR HIGH CURRENT FAULT	Internal error or damaged DPS	External troubleshooting is not possible Clear the Fault. If Fault becomes Active Replace the DPS
P0637	DPS GLOBE	OVER CURRENT	short-circuit in motor/ internal error	change DPS
P0658	DPS	PHASE A_LOW	DPS motor supply Damaged DPS	External troubleshooting is not possible Clear the Fault. If Fault becomes Active Replace the DPS
P0659	DPS	PHASE A_HIGH	DPS motor supply Damaged DPS	External troubleshooting is not possible Clear the Fault. If Fault becomes Active Replace the DPS
P0666	DPS	HIGH TEMPERATURE	High temperature of the DPS. Extreme usage of the unit.	Let the unit cool down.
P0685	ECM	Accessory relay circuit	Blown fuse, damaged or disconnected relay, damaged circuit wires, damaged connectors or damaged ECM output pins	Check related fuse(s) Disconnect Accessories and Lights relays, turn key switch (on w/lights) Measure coil resistance of both relays (Expected value: 70 to 90 Ohms) Measure the voltage of the harness power wires of both relays relative to ground (Expected value: Battery voltage) Disconnect the associated ECM connector Measure the resistance of the harness wires, between the ECM and both relays (Expected value < 2 Ohms)

PCODE	MODULE	DESCRIPTION	CAUSE	ACTION
P0686	ECM	Accessory relay circuit shorted to ground or open circuit	Blown fuse, damaged or disconnected relay, damaged circuit wires, damaged connectors or damaged ECM output pins	Check related fuse(s) Disconnect Accessories and Lights relays, turn key switch (on w/lights) Measure coil resistance of both relays (Expected value: 70 to 90 Ohms) Measure the voltage of the harness power wires of both relays relative to ground (Expected value: Battery voltage) Disconnect the associated ECM connector Measure the resistance of the harness wires, between the ECM and both relays (Expected value < 2 Ohms)
P0687	ECM	Accessory relay circuit shorted to battery +	Damaged relay, damaged circuit wires, damaged connector or damaged ECM output pins.	Check related fuse(s) Disconnect Accessories and Lights relays, turn key switch (on w/lights) Measure coil resistance of both relays (Expected value: 70 to 90 Ohms) Measure the voltage of the harness power wires of both relays relative to ground (Expected value: Battery voltage) Disconnect the associated ECM connector Measure the resistance of the harness wires, between the ECM and both relays (Expected value < 2 Ohms)
P0691	ECM	Radiator fan circuit shorted to ground or open circuit	Blown fuse, damaged or disconnected fan relay, damaged circuit wires, damaged connectors or damaged ECM output pins.	Check related fuse(s) Disconnect radiator fan relay and measure his coil resistance (Expected value: 70 to 90 Ohms) Measure the voltage of the harness power wire of relay relative to ground (Expected value: Battery voltage) Disconnect the associated ECM connector Measure the resistance of the harness wire, between the ECM and relay (Expected value < 2 Ohms)

PCODE	MODULE	DESCRIPTION	CAUSE	ACTION
P0692	ECM	Radiator fan circuit shorted to battery +	Damaged fan relay, damaged circuit wires, damaged connector or damaged ECM output pins.	Check related fuse(s) Disconnect radiator fan relay and measure his coil resistance (Expected value: 70 to 90 Ohms) Measure the voltage of the harness power wire of relay relative to ground (Expected value: Battery voltage) Disconnect the associated ECM connector Measure the resistance of the harness wire, between the ECM and relay (Expected value < 2 Ohms)
P0790	ECM	Check of Override Button	Damaged switch, damaged circuit wires, damaged connector, damaged ECM pins.	Open the ECM Monitoring page in BUDS. Press on Override button. Ensure that the 2 switch light change of state.
P0811	ECM	Clutch slippage detected	Excessive clutch slippage	Check clutch for proper clutch behavior
P1036	ECM	Internal fault path number for Signal error : power stage of heater of Sensor upstream catalyst, LSU 2	Blown fuse, damaged or disconnected O2 sensor, damaged or disconnected circuit wires, damaged ECM output pins.	Check related fuse(s) Disconnect the 2nd oxygen sensor and measure his resistance (Expected value: 7 to 12 Ohms) Measure the voltage of the harness power wire relative to ground (Expected value: Battery voltage) Disconnect the associated ECM connector and measure resistance between harness wires and ground (Expected value: open) Measure the resistance of the harness wires, between the ECM and sensor connectors (Expected value < 2 Ohms)
P1120	ECM	Wrong Throttle Accelerator Sensor (TPS) position	Wrong TPS sensor position. Both TPS position failed test.	Check TAS adjustment.

PCODE	MODULE	DESCRIPTION	CAUSE	ACTION
P1130	ECM	ECU int. fault path no.: electrical diagnosis for lambda sensor upstream cat. Sig-error	Damaged O2 sensor, damaged circuit wires, damaged connector or damaged ECM output pins.	Check related fuse(s) Disconnect the 1st oxygen sensor (FRONT cylinder) and measure his resistance (Expected value: 7 to 12 Ohms) Measure the voltage of the harness power wire relative to ground (Expected value: Battery voltage) Disconnect the associated ECM connector and measure resistance between harness wires and ground (Expected value: open) Measure the resistance of the harness wires, between the ECM and sensor connectors (Expected value < 2 Ohms)
P1136	ECM	ECU int. fault path no.: electrical diagnosis for second lambda sensor upstream cat. Sig-error	Damaged O2 sensor, damaged circuit wires, damaged connector or damaged ECM output pins.	Check related fuse(s) Disconnect the 2nd oxygen sensor (REAR cylinder) and measure his resistance (Expected value: 7 to 12 Ohms) Measure the voltage of the harness power wire relative to ground (Expected value: Battery voltage) Disconnect the associated ECM connector and measure resistance between harness wires and ground (Expected value: open) Measure the resistance of the harness wires, between the ECM and sensor connectors (Expected value < 2 Ohms)

PCODE	MODULE	DESCRIPTION	CAUSE	ACTION
P1171	ECM	Diagnostic Fault code for Fuel Supply System (ORA Max Fault) Exhaust Bank1	Injection and fuel supply system. Adaptation of the air charge reaching the limits (min and max) based on the lambda sensors feedback. Too much variation in the engine itself in reference to a nominal engine. It can be cause by an engine that has been modified or out of spec (airbox, air filter, injectors, exhaust system, valve clearance, etc.) or any other components that can influence the engine performance.	Check injector and fuel supply system.
P1172	ECM	Diagnostic Fault code for Fuel Supply System (ORA Min Fault) Exhaust Bank1	Injection and fuel supply system. Adaptation of the air charge reaching the limits (min and max) based on the lambda sensors feedback. Too much variation in the engine itself in reference to a nominal engine. It can be cause by an engine that has been modified or out of spec (airbox, air filter, injectors, exhaust system, valve clearance, etc.) or any other components that can influence the engine performance.	Check injector and fuel supply system.
P1174	ECM	Diagnostic Fault code for Fuel Supply System (ORA Max Fault) Exhaust Bank2	Injection and fuel supply system. Adaptation of the air charge reaching the limits (min and max) based on the lambda sensors feedback. Too much variation in the engine itself in reference to a nominal engine. It can be cause by an engine that has been modified or out of spec (airbox, air filter, injectors, exhaust system, valve clearance, etc.) or any other components that can influence the engine performance.	Check injector and fuel supply system.

PCODE	MODULE	DESCRIPTION	CAUSE	ACTION
P1175	ECM	Diagnostic Fault code for Fuel Supply System (ORA Min Fault) Exhaust Bank2	Injection and fuel supply system. Adaptation of the air charge reaching the limits (min and max) based on the lambda sensors feedback. Too much variation in the engine itself in reference to a nominal engine. It can be cause by an engine that has been modified or out of spec (airbox, air filter, injectors, exhaust system, valve clearance, etc.) or any other components that can influence the engine performance.	Check injector and fuel supply system.
P1339	ECM	Signal fault at phase determination	backup phase detection strategies not able to find the correct phase	
P1606	ECM	Control Module Processor	Internal ECM problem	Check for ECM fault External troubleshooting not possible
P160E	ECM	Electrical Throttle Actuator (ETA) control fault	Damaged ETC, damaged circuit wires, damaged connector or damaged ECM output pins.	Disconnect ETC Measure the resistance of the harness wires, between the ECM and tested device connectors (Expected value < 2 Ohms)
P1610	ECM	Electrical Throttle Actuator (ETA) shorted to V +	Damaged ETC, damaged circuit wires, damaged connector or damaged ECM output pins.	Disconnect ETC Measure the resistance of the harness wires, between the ECM and tested device connectors (Expected value < 2 Ohms)
P1611	ECM	Electrical Throttle Actuator (ETA) shorted to ground	Damaged ETC, damaged circuit wires, damaged connector or damaged ECM output pins.	Disconnect ETC Measure the resistance of the harness wires, between the ECM and tested device connectors (Expected value < 2 Ohms)
P1612	ECM	Electrical Throttle Actuator (ETA) signal not plausible	Damaged ETC, damaged circuit wires, damaged connector or damaged ECM output pins.	Disconnect ETC Measure the resistance of the harness wires, between the ECM and tested device connectors (Expected value < 2 Ohms)

PCODE	MODULE	DESCRIPTION	CAUSE	ACTION
P1613	ECM	Electrical Throttle Actuator (ETA)	Damaged ETC, damaged circuit wires, damaged connector or damaged ECM output pins.	Disconnect ETC Measure the resistance of the harness wires, between the ECM and tested device connectors (Expected value < 2 Ohms)
P1614	ECM	Throttle idle position failure on throttle release	Throttle mechanical adjustment No initialization after throttle body/ ECM replacement	Check throttle mechanical adjustment. Check idle stop for wear. Ensure throttle plate is against throttle stop. Check throttle angle at idle. Perform THROTTLE POSITION SENSOR RESET in BUDS with throttle completely OFF. Refer to the service manual for more details.
P1615	ECM	TPS position deviation fault	Throttle mechanical adjustment No initialization after throttle body/ ECM replacement	Check throttle mechanical adjustment. Check idle stop for wear. Ensure throttle plate is against throttle stop. Check throttle angle at idle. Perform THROTTLE POSITION SENSOR INITIALIZATION in BUDS with throttle completely OFF. Refer to the service manual for more details.
P1616	ECM	Throttle limp-home-position failed	Throttle mechanical stop No initialization after throttle body/ ECM replacement	Check throttle mechanical adjustment. Check idle stop for wear. Ensure throttle plate is against throttle stop. Check throttle angle at idle. Perform THROTTLE POSITION SENSOR INITIALIZATION in BUDS with throttle completely OFF.. Refer to the service manual for more details.

Midwest Manuals
Green Manuals
Paperless Manuals For a Better Tomorrow
If you bought this manual from any other seller please leave them NEGATIVE feedback and notify me at bestshopmanuals@gmail.com

PCODE	MODULE	DESCRIPTION	CAUSE	ACTION
P1619	ECM	TPS adaptation failure	Wrong throttle body mechanical position during reset of closed TPS or no initialization after ECM replacement.	Check THROTTLE cable adjustment. Check idle stop for wear. Ensure throttle plate is against throttle stop. Perform THROTTLE POSITION SENSOR INITIALIZATION in BUDS with throttle completely OFF.FF.
P1620	ECM	TPS adaptation failure	Wrong throttle body mechanical position during reset of closed TPS or no initialization after ECM replacement.	Check cable adjustment. Check idle stop for wear. Make sure throttle plate is against throttle stop. Perform THROTTLE POSITION SENSOR INITIALIZATION in BUDS with throttle completely OFF.
P1621	ECM	TPS adaptation cancelled lower mechanical stop failed	Throttle mechanical stop No initialization after throttle body/ ECM replacement	Check cable adjustment. Check idle stop for wear. Ensure throttle plate is against throttle stop. Check throttle angle at idle. Perform THROTTLE POSITION SENSOR INITIALIZATION in BUDS with throttle completely OFF. Refer to the service manual for more details.
P1622	ECM	TPS adaptation failed	Throttle mechanical stop No initialization after throttle body/ ECM replacement	Check cable adjustment. Check idle stop for wear. Ensure throttle plate is against throttle stop.. Check throttle angle at idle. Perform THROTTLE POSITION SENSOR INITIALIZATION in BUDS with throttle completely OFF. Refer to the service manual for more details.
P16C0	ECM	ECU ADC plausibility check	Monitoring plausibility check failed	Check for ECM fault
P16C1	ECM	ECU ADC test failed	Monitoring plausibility check failed	Check for ECM fault
P16C2	ECM	ECU monitoring error	Monitoring plausibility check failed	Check for ECM fault
P16C3	ECM	Throttle Accelerator Sensors (TAS) monitoring check fault	Monitoring plausibility check failed	Check for ECM fault

PCODE	MODULE	DESCRIPTION	CAUSE	ACTION
P16C4	ECM	Engine speed monitoring check fault	Monitoring plausibility check failed	Check for ECM fault
P16C5	ECM	Safety fuel cut-off activated monitoring check level 1	Monitoring plausibility check failed	Check for ECM fault
P16C6	ECM	Safety fuel cut-off activated monitoring check level 2	Monitoring plausibility check failed	Check for ECM fault
P16C7	ECM	Throttle valve plausibility check failed	Monitoring plausibility check failed	Check for ECM fault
P16C8	ECM	Permitted throttle valve position monitoring check exceeded	Monitoring plausibility check failed	Check for ECM fault
P1F01	DPS	Power output overload	Motor short circuit or power output failed	Reset fault, If fault re-occur, replace DPS unit
P1F02	DPS	Power output overload (18V).	High voltage at the unit input.	Measure battery voltage with engine stopped. (Expected value: 11 to 13 volts) Measure battery voltage with engine running. (Expected value: 13 to 14.7 volts) test charging system as per shop manual
P1F03	DPS	Electronic Circuit Overheat	Hi temperature detected by on board temperature sensor.	Fault may become Active in extreme use situations. Reset fault and let DPS cool down. If fault re-occur in normal riding conditions, replace DPS unit
P1F05	DPS	Motor current sensor range/performance	Motor input vs output Current correlation check failed	External troubleshooting is not possible Clear the Fault. If Fault becomes Active Replace the DPS
P20EB	ECM	Main relay de-energized too late or sticking	Damaged circuit wires, damaged connectors or damaged ECM output pins. Damaged relay	Disconnect main relay and measure his coil resistance (Expected value: 70 to 90 Ohms)

PCODE	MODULE	DESCRIPTION	CAUSE	ACTION
P212C	ECM	2nd Throttle Accelerator Sensors (TPS) low	Damaged TPS, damaged circuit wires, damaged connector or damaged ECM output pins.	Make sure sensor connector is well inserted Disconnect the sensor and associated ECM connector Measure the resistance of the harness wires, between the ECM and sensor connectors (Expected value < 2 Ohms)
P212D	ECM	2nd Throttle Accelerator Sensors (TPS) high	Damaged TPS, damaged circuit wires, damaged connector or damaged ECM output pins.	Make sure sensor connector is well inserted Disconnect the sensor and associated ECM connector Measure the resistance of the harness wires, between the ECM and sensor connectors (Expected value < 2 Ohms)
P2228	ECM	Ambient pressure sensor shorted to ground	Damaged sensor, damaged circuit wires, damaged connector or damaged ECM pins, ECM voltage supply low	Make sure sensor connector is well inserted Disconnect the sensor, measure the voltage of the harness power wires (Expected value: 4.8 to 5.1 Volts) Measure the resistance of the harness wires, between the ECM and sensor connectors (Expected value < 2 Ohms)
P2229	ECM	Ambient pressure sensor short to V +	Damaged sensor, wires shorted to battery +, ECM voltage supply too high.	Make sure sensor connector is well inserted Disconnect the sensor, measure the voltage of the harness power wires (Expected value: 4.8 to 5.1 Volts) Measure the resistance of the harness wires, between the ECM and sensor connectors (Expected value < 2 Ohms)
P2279	ECM	Intake Air System leak	Check for cracked plenum	Intake or throttle body air leak

PCODE	MODULE	DESCRIPTION	CAUSE	ACTION
P2299	ECM	Throttle and break pedal are used at the same time	If the accelerator pedal and the brake are activated simultaneously for a delay time and the vehicle is moving faster than Speed-threshold	
P2416	ECM	exchanged lambda sensors upstream catalyst	Wrong O2 sensor position after O2 replacement or wire replacement.	Swap O2 sensor wires.
P2530	ECM	Ignition switch state not plausible	Ignition key switch connection or internal switch fault	Check ignition key contacts and wire connections
P2620	ECM	Throttle Accelerator Sensors (TPS) position	Wrong TPS sensor position.	Check TAS adjustment.
P2621	ECM	First Throttle Accelerator Sensor (TPS) low	Damaged TPS, damaged circuit wires, damaged connector or damaged ECM output pins.	Make sure sensor connector is well inserted Disconnect the sensor and associated ECM connector Measure the resistance of the harness wires, between the ECM and sensor connectors (Expected value < 2 Ohms)
P2622	ECM	First Throttle Accelerator Sensors (TPS) high	Damaged TPS, damaged circuit wires, damaged connector or damaged ECM output pins.	Make sure sensor connector is well inserted Disconnect the sensor and associated ECM connector Measure the resistance of the harness wires, between the ECM and sensor connectors (Expected value < 2 Ohms)
P2670	DPS	PHASE B_LOW	DPS motor supply Damaged DPS	External troubleshooting is not possible Clear the Fault. If Fault becomes Active Replace the DPS
P2671	DPS	PHASE B_HIGH	DPS motor supply Damaged DPS	External troubleshooting is not possible Clear the Fault. If Fault becomes Active Replace the DPS

PCODE	MODULE	DESCRIPTION	CAUSE	ACTION
P2801	ECM	Gear position sensor invalid range	Damaged circuit wires, damaged gear position sensor, damaged ECM pins or damaged transmission.	Open ECM Monitoring page in BUDS, Verify that gear position information changes with gear selection changes on vehicle. Disconnect GBPS Measure voltage between harness connector 5-GBPS-1 and 5-GBPS-3. (Expected value: 4.8 to 5.1 Volts) Measure resistance from connector: 5-ECM-B13 to 5-GBPS-2 (Expected value: < 2 Ohms) Measure resistance from connector: 5-ECM-B22 to 5-GBPS-3 (Expected value: < 2 Ohms)
P2806	ECM	Gear position sensor angle defined area vs position not plausible	Damaged circuit wires, damaged gear position sensor, damaged ECM pins or damaged transmission.	Open ECM Monitoring page in BUDS, Verify that gear position information changes with gear selection changes on vehicle. Disconnect GBPS Measure voltage between harness connector 5-GBPS-1 and 5-GBPS-3. (Expected value: 4.8 to 5.1 Volts) Measure resistance from connector: 5-ECM-B13 to 5-GBPS-2 (Expected value: < 2 Ohms) Measure resistance from connector: 5-ECM-B22 to 5-GBPS-3 (Expected value: < 2 Ohms)
U0073	DPS	CAN bus off, no messages	Damaged circuit wires or damaged DPS pins.	On the Diagnostic connector, measure the resistance between the two CAN lines (Expected value: 50 to 70 Ohms) Measure the resistance of each CAN wire in the harness, between the Diagnostic and DPS connectors (Expected value < 5 Ohms)

PCODE	MODULE	DESCRIPTION	CAUSE	ACTION
U0073	DPS GLOBE	CAN LOSS/CANBUS FAILURE/CANBUSS OFF	Damaged CAN Bus wires to Network, damaged DPS pins or wires.	On the Diagnostic connector, measure the resistance between the two CAN lines (Expected value: 50 to 70 Ohms) Measure the resistance of each CAN wire in the harness, between the Diagnostic and DPS connectors (Expected value < 5 Ohms)
U0073	SCM	CAN-Bus failure, CAN-Bus OFF	Damaged circuit wires or damaged SCM pins.	On the Diagnostic connector, measure the resistance between the two CAN lines (Expected value: 50 to 70 Ohms) Measure the resistance of each CAN wire in the harness, between the Diagnostic and SCM connectors (Expected value < 2 Ohms)
U0100	DPS	Lost communication with ECM (lost of CAN ID's)	Damaged CAN Bus wires to ECM, damaged DPS/ECM pins.	On the Diagnostic connector, measure the resistance between the two CAN lines (Expected value: 50 to 70 Ohms) Measure the resistance of each CAN wire in the harness, between the Diagnostic and ECM connectors (Expected value < 5 Ohms)
U0100	DPS GLOBE	ECM CAN COMMUNICATION OFF	Damaged CAN Bus wires to Network, damaged DPS pins or wires.	On the Diagnostic connector, measure the resistance between the two CAN lines (Expected value: 50 to 70 Ohms) Measure the resistance of each CAN wire in the harness, between the Diagnostic and DPS connectors (Expected value < 5 Ohms)
U0100	SCM	Lost Communication With ECM (lost of CAN ID's)	Missing CAN ID from ECM Internal module error Damaged circuit wires or damaged module pins.	On the Diagnostic connector, measure the resistance between the two CAN lines (Expected value: 50 to 70 Ohms) Measure the resistance of each CAN wire in the harness, between the Diagnostic and ECM connectors (Expected value < 2 Ohms)

PCODE	MODULE	DESCRIPTION	CAUSE	ACTION
U0155	DPS	Lost communication with CLUSTER	Damage CAN Bus wires to cluster Damaged circuit wires or damaged Cluster module pins.	On the Cluster power connector, measure the voltage between the two harness power wires (Expected value: Battery voltage) On the Diagnostic connector, measure the resistance between the two CAN lines (Expected value: 50 to 70 Ohms) Measure the resistance of each CAN wire in the harness, between the Diagnostic and Cluster connectors (Expected value < 2 Ohms)
U0155	ECM	Lost communication with CLUSTER (lost of CAN ID's)	Missing CAN ID Module internal error Damaged circuit wires or damaged module pins.	With vehicle connected to BUDS with MPI2, check for CLUSTER fault or ECM fault Disconnect the cluster connector Measure the voltage of the harness power wires relative to ground (Expected value: Battery voltage) Disconnect MPI2 from DB connector Measure the resistance between the two CAN lines (Expected value: 50 to 70 Ohms) Disconnect the ECM connector Measure the resistance of each CAN wire in the harness, between the Diagnostic and ECM connectors (Expected value < 2 Ohms) Measure the resistance of each CAN wire in the harness, between the Diagnostic and Cluster connectors (Expected value < 2 Ohms)

PCODE	MODULE	DESCRIPTION	CAUSE	ACTION
U0155	ECM	Lost communication with CLUSTER (lost of CAN ID's)	Missing CAN ID Module internal error Damaged circuit wires or damaged module pins.	With vehicle connected to BUDS with MPI2, check for CLUSTER fault or ECM fault Disconnect the cluster connector Measure the voltage of the harness power wires relative to ground (Expected value: Battery voltage) Disconnect MPI2 from DB connector Measure the resistance between the two CAN lines (Expected value: 50 to 70 Ohms) Disconnect the ECM connector Measure the resistance of each CAN wire in the harness, between the Diagnostic and ECM connectors (Expected value < 2 Ohms) Measure the resistance of each CAN wire in the harness, between the Diagnostic and Cluster connectors (Expected value < 2 Ohms)
U0155	SCM	Lost Communication With Cluster (lost of CAN ID's)	Missing CAN ID Module internal error Damaged circuit wires or damaged module pins.	Check for Cluster fault Measure the voltage of the cluster harness power wires relative to ground (Expected value: Battery voltage) On the Diagnostic connector, measure the resistance between the two CAN lines (Expected value: 50 to 70 Ohms) Measure the resistance of each CAN wire in the harness, between the Diagnostic and SCM connectors (Expected value < 2 Ohms) Measure the resistance of each CAN wire in the harness, between the Diagnostic and Cluster connectors (Expected value < 2 Ohms)

PCODE	MODULE	DESCRIPTION	CAUSE	ACTION
U0167	ECM	Lost communication with Vehicle Immobilizer Control Module	The Vehicle Immobilizer is reporting an electrical fault on the communication line.	Check for dirty or oxidized Key contact. Clean key contact if needed. Check for broke key contact Ensure sensor connector is fully inserted. Measure resistance between ECMB-A1 and CC-C (Expected value < 2 Ohms). Measure resistance between ECMB-C2 and CC-E (Expected value < 2 Ohms).
U0300	ECM	Invalid Security Exchange received	Incorrect ECM or CLUSTER, Incorrect software version.	Install the proper ECM or CLUSTER on vehicle. Update security coding using BUDS
U0301	ECM	Variant Coding, software incompatibility (DFC_MoFVar)	Faulty calibration or variant Faulty programming Damaged ECM	Try updating the ECM variant or calibration If the problem persists, reflash ECM If the problem persists, replace ECM.
U0302	ECM	Variant Coding, software incompatibility (DFC_MTVARNPL)	Faulty calibration or variant Faulty programming Damaged ECM	Try updating the ECM variant or calibration If the problem persists, reflash ECM If the problem persists, replace ECM.
U0400	DPS	Variant Coding failure Software incompatibility	Faulty variant coding Faulty programming	Check in the BUDS Tab "vehicle configuration" if the DPS option is checked. Reflash the DPS with the latest software
U0400	DPS GLOBE	VARIANT IMCOMPATIBILITY	vehicle configuration error or DPS software mismatch or error	look at BUDS vehicle config. check DPS for reflash write config and cycle on/off vehicle
U0400	SCM	Variant Coding failure Software incompatibility	SCM not install on expected vehicle Faulty programming	Check if SCM is install on a valid vehicle Update SCM Open Vehicle Configuration in Setting page in BUDS & if check vehicle configuration is set as expected for the vehicle.

PCODE	MODULE	DESCRIPTION	CAUSE	ACTION
U0416	DPS GLOBE	VEHICLE SPEED ERROR VALUE	vehicle speed error value received from ECM	Check if vehicle speed is available in Monitoring page in BUDS Check related fuse(s) Remove the sensor connector, measure the voltage of the harness power wire relative to ground (Expected value: Battery voltage) Measure the resistance of the harness wires, between the ECM and sensor connectors (Expected value < 5 Ohms)
U0426	ECM	Invalid Data Received From Vehicle Immobilizer Control Module	The Vehicle Immobilizer could not read the number of the access key.	Check for dirty or oxidized Key contact. Clean key contact if needed. Check for broke key contact Ensure sensor connector is fully inserted. Measure resistance between ECMB-A1 and CC-C (Expected value < 2 Ohms). Measure resistance between ECMB-C2 and CC-E (Expected value < 2 Ohms).
U220E	ECM	Invalid Check Sum from CLUSTER message	Check Sum error	External troubleshooting is not possible Check for communication fault
U3001	DPS	Module improper shutdown	Lost of power on DPS that can be caused by damaged circuit wires or damaged DPS pins.	Check the two DPS fuses Ensure DPS connector is fully inserted. Check for Damaged tail light, DPS, Cluster circuit wires Check for damaged DPS pins.
U3001	SCM	Module improper shutdown	Lost of power on SCM Damaged circuit wires or damaged SCM pins.	Check fuse Ensure SCM connector is fully inserted. Check for Damaged circuit wires or damaged SCM pins.

INTELLIGENT THROTTLE CONTROL (iTC)

GENERAL

SYSTEM DESCRIPTION

The iTC is an electronic throttle control system that includes:

– Throttle accelerator sensor (TAS)
– Electric throttle actuator (ETA)
– Throttle position sensor (TPS).

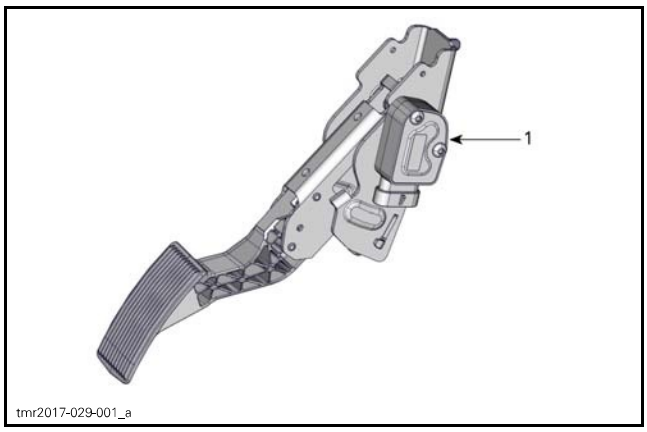

ACCELERATOR PEDAL
1. TAS

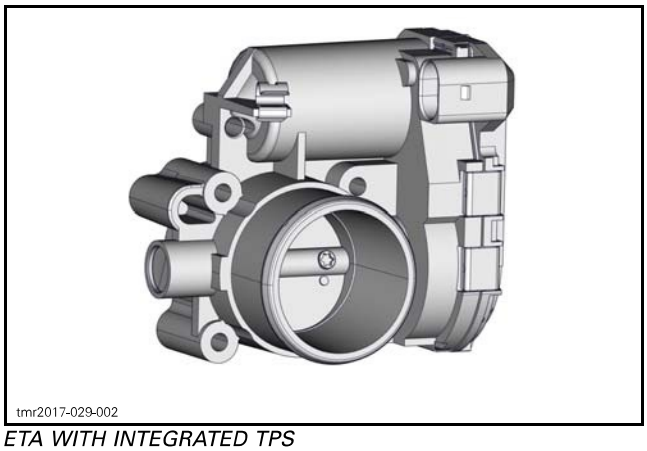

ETA WITH INTEGRATED TPS

The TAS is part of the accelerator pedal module. The ETA and TPS are comprised in the throttle body.

The iTC is often referred to as a "throttle by wire" system (no throttle cable is used).

According to the accelerator pedal position and other inputs, the ECM powers the ETA motor using pulse width modulation (PWM), to control the throttle plate. When the ECM detects through the TPS that the throttle plate has reached the targeted position, the ECM stops the throttle actuator.

Depending on various conditions and the type of key used, the iTC can modify the ETA response, limit the engine torque or vehicle speed.

For torque limitation, the ECM processes the TAS input differently depending on the specific mode. In other words, the driver's demand may not necessarily result in the corresponding throttle opening.

For vehicle speed limitation, the iTC controls the throttle opening to maintain a maximum set speed even if the accelerator is pedal fully depressed.

SYSTEM MAIN FEATURES

The use of the iTC allows the following features:

– Key modes
– ECO/Sport modes
– Override functions.

Key Modes

Normal Key

When a normal key is used and sport mode is selected, engine delivers approximately 70% of the accelerator pedal demand (less if ECO mode is selected). Vehicle speed is limited to 70 km/h (43 MPH).

Performance Key

When a performance key is used and sport mode is selected, engine delivers 100% of the accelerator pedal demand (less if ECO mode is selected). The vehicle speed is limited to 133 km/h (83 MPH).

ECO/Sport Modes

When sport mode is selected, the full potential of the specific ignition key is deployed except when gearbox is in reverse or low gear.

When ECO mode selected, the full potential of the specific ignition key is not reached and the accelerator pedal response is smoother than in sport mode.

Reverse Override Function

In reverse gear, engine delivers less than the accelerator pedal demand and vehicle speed is limited to 20 km/h (12 MPH). Also, the accelerator pedal response is smoother than in high gear.

If the override button is depressed, vehicle speed and engine acceleration are increased. Even with the override is activated, the ECM will not allow the engine to deliver 100% of the accelerator pedal demand.

SYSTEM OTHER FEATURES

Driver's Seat Belt Monitoring

If driver's seat belt not fastened, speed is limited to approximately 20 km/h (12 MPH).

Brake Monitoring

If the ECM receives a brake switch signal while gearbox is in gear and the vehicle moving, the ETA will decrease throttle plate opening and engine speed will drop to idle.

NOTE: A defective brake light switch that would stay in a closed position would force the engine to run at idle.

Electronic Engine Braking

The ECM commands the throttle to open enough to bring engine RPM slightly above CVT drive belt engagement speed. This keeps the drive pulley and belt engaged and allows for engine braking.

The engine braking function stops when vehicle stops.

Pressing on the brake pedal does not cancel the electronic engine braking function.

Electronic Drive Belt Protection

Electronic drive belt protection works in all modes (ECO,Sport).

This function is activated when riding at too slow speed for the **high range**, such as in the following situations:

- Pulling
- Pushing
- Hauling a load
- 4X4 applications
- Mud holes
- Water holes
- Crossing obstacles
- Climbing onto trailer
- Hill climbing

In the above mentioned situations the electronic drive belt protection will help protect the CVT drive belt from being damaged by activating the engine torque limiter. The gauge will also scroll a *LOW GEAR* message, suggesting the operator to immobilize the vehicle and set to LOW GEAR.

The ECM will temporarily deactivate and activate cylinder(s) to vary engine speed. This results in very apparent vehicle stuttering. The goal is to move the drive belt to a cooler section of the CVT drive and driven pulley sheaves.

Low Range Operation

When gearbox is in low range, engine delivers less than the accelerator pedal demand and the accelerator pedal response is smoother than in high gear.

Engine Temperature Monitoring

If coolant gets too hot, engine will deliver less than the accelerator pedal demand. The limitation is proportional to the overheat degree.

Battery Voltage Monitoring

If the battery voltage gets low, the engine idle RPM will be increased at approximately 1500 RPM.

Drowned Mode

In case of a fuel flooded engine, the engine can be cranked without fuel injection.

To enter the drowned mode, the TAS signals must indicate a throttle demand of at least 20% before and during engine cranking.

Limp Home Mode

When certain faults are occurring, the ECM will enter the limp home mode. In this mode, the engine will deliver less than the accelerator pedal demand.

PROCEDURES

SPORT/ECO SWITCH

Sport/ECO Switch Wire Information

FUNCTION	PIN	COLOR
Signal (to ECM B pin D4)	1	BROWN/GREEN
Ground through ECM (to ECM B pin A1)	2	ORANGE/VIOLET

SEAT BELT SWITCH

Seat Belt Switch Wire Information

FUNCTION	PIN	COLOR
Signal (to ECM B pin E3)	B	YELLOW/GREY
Ground through ECM (to ECM B pin A1)	A	ORANGE/VIOLET

OVERRIDE SWITCH

Override Switch Wire Information

FUNCTION	PIN	COLOR
Normal position signal (to ECM B pin D3)	1	VIOLET/YELLOW
Ground through ECM (to ECM B pin B1)	2	VIOLET/GREY
Override position signal (to ECM B pin F3)	3	VIOLET/ORANGE

THROTTLE ACCELERATOR SENSOR (TAS)

TAS Description

The throttle accelerator sensor (TAS) is a double hall effect sensor that sends a signal to the ECM which is proportional to the accelerator pedal. The redundancy is used for security purposes.

The voltage output of the hall effect sensors are different.

Replacing the TAS

The TAS is part of the accelerator pedal.

1. Note the wire routing and locking tie position.
2. Disconnect electrical connector.
3. Remove both accelerator pedal retaining nuts outside the passenger compartment. Reach nuts by the RH side of the vehicle above the rack and pinion, beside the coolant hoses.

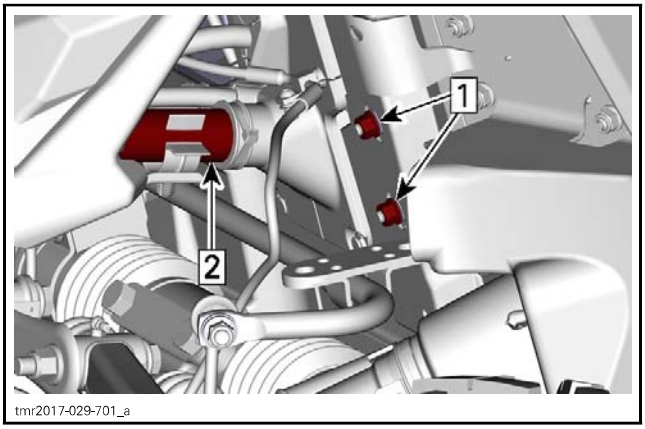

PARTS REMOVED FOR CLARITY
1. retaining nuts
2. Coolant hoses

To install, reverse the removal procedure, however pay attention to the following:

Route and attach wires correctly.

Tighten nuts to the specified torque.

TIGHTENING TORQUE	
Accelerator pedal retaining nuts	13 N•m ± 1 N•m (115 lbf•**in** ± 9 lbf•**in**)

Carry out the *ECM FIRST INITIALIZATION*, refer to *ELECTRONIC FUEL INJECTION (EFI)* subsection.

TAS Wire Information

FUNCTION	PIN	COLOR
Signal (E1)	A	GRAY/GREEN
Ground through ECM (K3)	B	GRAY/BLACK
Voltage input (5 volt) (K1)	C	GRAY/VIOLET
Voltage input (5 volt) (J3)	D	ORANGE/VIOLET
Signal (A3)	E	ORANGE/GREEN
Ground through ECM (B3)	F	ORANGE/BLACK

TAS Failure

If one TAS signal fails, the vehicle will enter the limp home mode. In this case, depressing the override button will temporarily restore accelerator pedal operation (while button is depressed).

If both TAS signals fail, the engine speed will drop to idle. Depressing the override button will force the ECM to open the ETA to an angle that allows the vehicle to move.

Testing the TAS with BUDS2

Connect toBUDS2 software. Refer to *COMMUNICATION TOOLS* subsection.

Select the **Measurements** and **ECM** tabs.

Look at the **TAS (%)** window as you depress the accelerator pedal.

The TAS signal should vary from near 0% to near 100% depending on the pedal position, which confirms the TAS signal reaches the ECM.

If the TAS signal is above 2% with the accelerator pedal at released, the MODE button will not be able to select between ECO/Sport modes. Replace the accelerator pedal assembly.

ELECTRONIC FUEL INJECTION (EFI)

SERVICE TOOLS

Description	Part Number	Page
ECM ADAPTER TOOL	529 036 166	5, 20, 25–26, 28–30, 32, 35
FLUKE 115 MULTIMETER	529 035 868	5, 10–11, 20, 23, 25–26, 28–30, 32, 34–35
FUEL HOSE DISCONNECT TOOL	529 036 037	13

SERVICE TOOLS – OTHER SUPPLIER

Description	Part Number	Page
FLUKE AUTOMOTIVE BACK PROBE PIN	TP40	23
FLUKE SUREGRIP INSULATED TEST LEADS	TL224	23

SERVICE PRODUCTS

Description	Part Number	Page
DIELECTRIC GREASE	293 550 004	24
LOCTITE 243 (BLUE)	293 800 060	33
LOCTITE 767 (ANTISEIZE LUBRICANT)	293 800 070	35

GENERAL

⚠ WARNING

When electrically disconnecting or removing the throttle body from the intake manifold, always remove the tether cord from the engine cut-off switch and disconnect the battery.

⚠ WARNING

Always disconnect battery prior to working on the fuel system. Always disconnect battery exactly in the specified order, BLACK (-) cable first. Electrical connections should be disconnected prior to disconnecting fuel lines.

⚠ WARNING

Fuel is flammable and explosive under certain conditions. Wear safety glasses and work in a well ventilated area. Do not smoke or allow open flames or sparks in the vicinity.

⚠ WARNING

Proceed with care and use appropriate safety equipment when working on the fuel system. Wipe off any fuel spillage in the engine compartment. Do not allow fuel to spill on hot engine parts and/or on electrical connectors.

Cover the fuel line connection with an absorbent shop rag before disconnecting them. Slowly disconnect the fuel hose to minimize spilling.

⚠ WARNING

Replace any damaged, leaking or deteriorated fuel lines or connections. After working on the fuel system, always pressurize the fuel system and check for fuel leaks. Refer to *FUEL SYSTEM PRESSURIZATION* in *FUEL TANK AND FUEL PUMP* subsection.

SYSTEM DESCRIPTION

The electronic fuel injection system (EFI) is comprised of various sensors used for detecting ongoing operating conditions of the engine and vehicle, and includes all the components that perform the required adjustments to the engine.

Electrical System

ECM (Electronic Control Module)

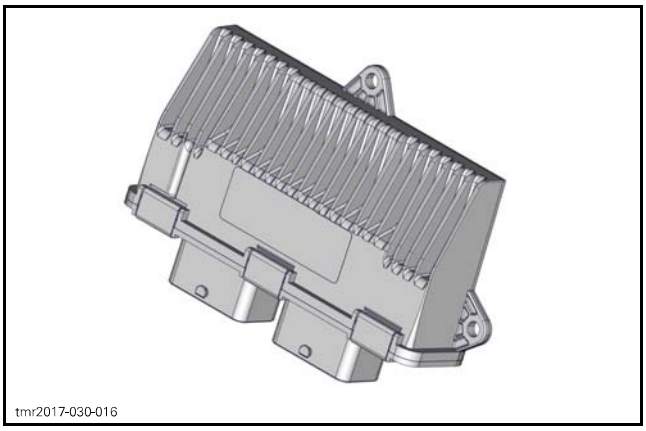

The ECM controls the engine operation and the vehicle power management. To control the engine, the ECM reads the inputs from the sensors which it compares to predetermined parameters stored in the ECM (fuel and ignition maps), makes computations, and activates the outputs accordingly (injectors, ignition coils etc.).

Refer to *ENGINE MANAGEMENT SYSTEM (EMS)* subsection for more information.

EFI Sensors

To control the injection system, the engine management uses input signals from the following sensors:

- Camshaft position sensor (CAPS)
- Crankshaft position sensor (CPS)
- Manifold absolute pressure and temperature sensor (MAPTS)
- Boost pressure sensor (BPS)
- Throttle position sensor (TPS) which is integrated to the throttle body (Electronic Throttle Control (ETC))
- Throttle accelerator sensor (TAS).
- Coolant Temperature Sensor (CTS)

Refer to *ENGINE MANAGEMENT SYSTEM (EMS)* subsection for more information.

Air Intake System

Air Filter

Air, drawn into the air filter housing, first passes through an inlet duct.

After it passes through the air filter, an air duct (intake adapter) is used to channel the air to the turbocharger.

The intercooler then cools the air before going to the throttle body.

Refer to *AIR INTAKE SYSTEM* subsection for more information.

Throttle Body ((ETC) Electronic Throttle Control)

Air for combustion is drawn in by the engine. The air flows through the throttle body (ETC) and is controlled by a throttle plate.

The Electronic Throttle Control (ETC) is a heated single 54 mm throttle body with integrated dual throttle position sensors (TPS) and electric throttle actuator (ETA) and is mounted on the intake manifold.

The ETA allows the ECM to electronically control the throttle plate opening which regulates the amount of air that enters the engine, and therefore engine speed.

There is no idle air control valve (IACV).

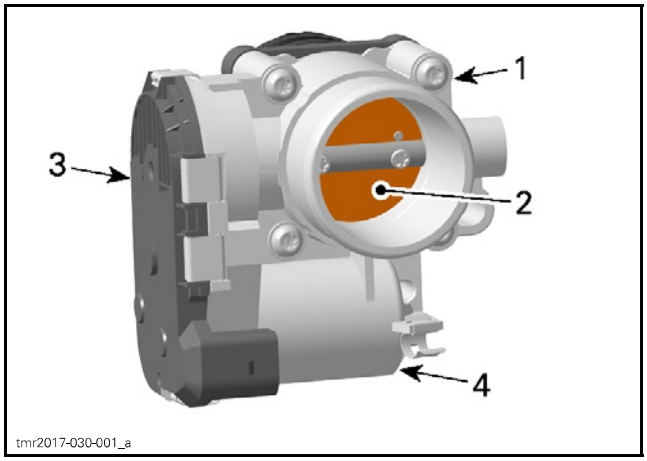

ELECTRONIC THROTTLE CONTROL (ETC)

1. *Throttle body (ETC)*
2. *Throttle plate*
3. *Dual Throttle Position Sensor (TPS)*
4. *Electric throttle actuator (ETA) (electric motor)*

Refer to *INTELLIGENT THROTTLE CONTROL (iTC)* subsection for more information.

Fuel System

Fuel Rail

A fuel rail is mounted on the intake manifold. The fuel rail, which is used to secure the injectors to the manifold, also provides to the injectors the fuel pressure that it receives from the fuel pump.

The fuel pressure applied to the fuel rail is regulated by the fuel pressure regulator located in the fuel pump module.

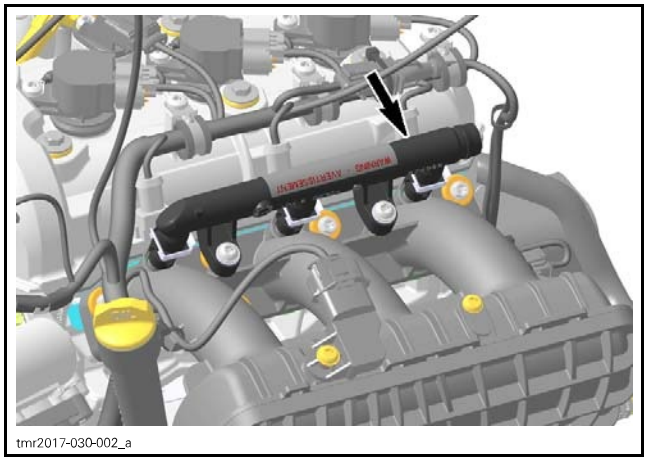
tmr2017-030-002_a

Fuel Injectors

Three fuel injectors are used to inject fuel into the intake ports of the cylinder head. One injector is used per cylinder.

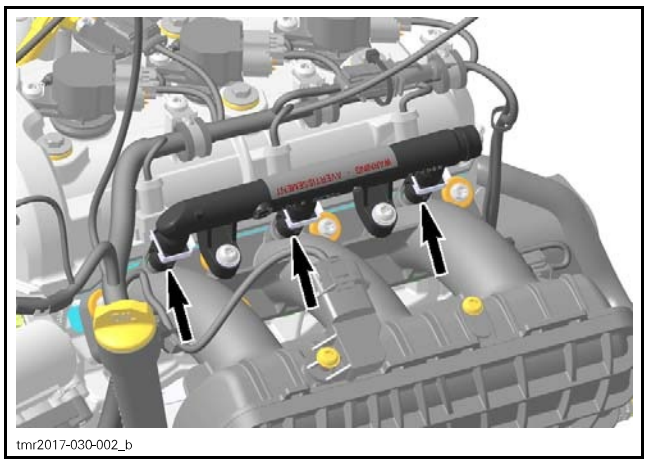
tmr2017-030-002_b

Fuel is injected in accordance with injection signals received from the ECM.

Fuel Pump

An electric fuel pump with an integrated pressure regulator and fuel system filters is used. For more details on the fuel pump unit, refer to *FUEL TANK AND FUEL PUMP* subsection.

ADJUSTMENT

IDLE SPEED

Idle speed is not adjustable. The EMS (Engine Management System) controls the idle speed of the engine through the iTC system by controlling throttle plate opening using the ETA (electric throttle actuator).

The vehicle multifunction gauge can provide a readout of the engine's idle RPM.

Indicated engine RPM may be verified using the BUDS2 software, refer to *COMMUNICATION TOOLS* subsection.

NOTE: The gauges and BUDS2 use the same signal to provide the engine RPM indication.

TROUBLESHOOTING

DIAGNOSTIC TIPS

Engine problems are not necessarily related to the fuel injection system.

It is important to ensure that the engine and propulsion system, fuel delivery and electrical systems are functioning normally.

For diagnostics purposes, use BUDS2 software. See *COMMUNICATION TOOLS* subsection.

After a problem has been solved, be sure to clear the fault(s) recorded in the ECM using the BUDS2 software.

⚠ WARNING

Electrical actuators and electronic modules may be powered up as soon as the START/STOP button is depressed. Always disconnect the battery prior to disconnecting any electrical or electronic parts.

Never use a battery charger to temporarily substitute the battery as it may cause the ECM to function erratically, or not at all.

Check related-circuit fuse solidity and condition with an ohmmeter. A visual inspection could lead to a false diagnosis.

Poor Idling

If poor idling is experienced, check the following:
- Poor quality fuel or water in the fuel
- Fault codes using BUDS2
- Throttle body cleanliness
- Engine leaks or other mechanical problem.

Electrical Related Problems

It is important to check the following in the electrical system:
- Battery voltage
- Fuses
- Ground connections
- Wiring and connectors.

Ensure that all electronic components are original BRP recommended components. Any modification to the wiring harness may lead to poor system operation or generate fault codes.

Electrical Connections

Pay particular attention to ensure that terminals and pins are not out of their connectors, corroded, or out of shape.

When probing terminals, pay attention not to deform the terminals as this could cause a loose or intermittent connection that would be difficult to troubleshoot.

NOTE: Do not apply dielectric grease or other lubricants on the ECM connectors.

PROCEDURES

ENGINE CONTROL MODULE (ECM)

NOTE: As a first troubleshooting step, always check for applicable fault codes using BUDS2 software.

Locating the ECM

The ECM is located behind the driver seat.

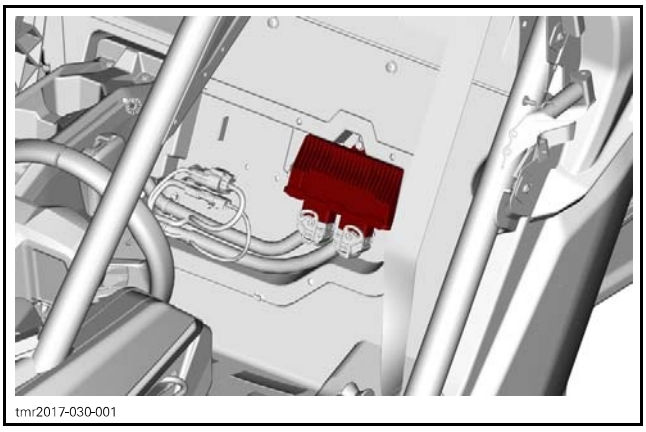
tmr2017-030-001

ECM Connector Identification

There are 2 connectors connected to the ECM:

– Engine harness connected to ECM-A
– Vehicle system control harness connected to ECM-B.

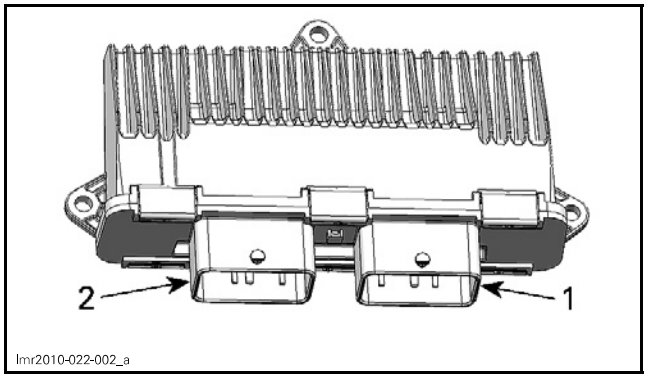

ECM CONNECTOR IDENTIFICATION - COOLING FINS FACING OUT
1. *Connector A*
2. *Connector B*

The ECM connectors have 48 pins.

NOTE: For connector information, cleaning and probing, refer to *WIRING HARNESS AND CONNECTORS* subsection.

ECM Power Circuit Validation

Briefly press START/STOP button.

This should wake up the ECM . The ECM will then activate relay 1 for approximately 12 seconds after which it will turn off all power. If the D.E.S.S. key is installed when the START/STOP button is pressed, the power will stay on for approximately 40 seconds.

QUICK INDICATION THAT ECM IS POWERED (ASSUMING THE OBSERVED COMPONENT IS WORKING)
Multifunction gauge comes ON.
Fuel pump turns on for approx. 2 seconds (if key on D.E.S.S. post installed).

If ECM does not turn on, check the following:

– Fuse F6 and F8.
– Battery voltage. Refer to *CHARGING SYSTEM* subsection.
– Relay R2
– START/STOP switch. Refer to *STARTING SYSTEM* subsection.
– ECM power circuit wires and ground wires.

For testing of fuses and relay R2, refer to *POWER DISTRIBUTION* subsection.

NOTE: When relay 2 is not working, the ECM and the complete vehicle electrical system will not be powered.

Testing the ECM Wake Up Circuit

1. Disconnect ECM-B connector and connect it to the ECM adapter tool.

REQUIRED TOOL	
ECM ADAPTER TOOL (P/N 529 036 166)	

2. Use a multimeter and select Vdc.

REQUIRED TOOL	
FLUKE 115 MULTIMETER (P/N 529 035 868)	

3. While pressing the START/STOP button, read voltage as follows.

ECM ADAPTER	BATTERY	READING
PIN	TERMINAL	VOLTAGE
B-D1	Negative (Ground)	Battery Voltage

If voltage is as per specification, refer to *TESTING THE ECM POWER SUPPLY*.

If voltage is out of specification:

– Test the START/STOP switch, refer to *STARTING SYSTEM* subsection.
– If the START/STOP switch tests good, test wiring and connectors from battery to ECM. Refer to *WIRING DIAGRAM*.

Testing the ECM Power Supply

1. Disconnect connector "B" from the ECM.
2. Install ECM connector "B" on the ECM ADAPTER TOOL (P/N 529 036 166).
3. Install a jumper wire between B-H2 and B-M2 on the ECM adapter tool.
4. Turn the ignition switch to ON.
5. Use the FLUKE 115 MULTIMETER (P/N 529 035 868) and select Vdc.
6. Check for voltage as follows.

ECM ADAPTER	BATTERY	VOLTAGE
B-M4	Negative post	Battery voltage

If voltage is not measured, check the following:

– Main relay
– Wiring and connections, refer to the *WIRING DIAGRAM*.

Testing the Continuity of ECM Ground Circuits

1. Connect ECM-B connector on the ECM adapter tool.

REQUIRED TOOL	
ECM ADAPTER TOOL (P/N 529 036 166)	

2. Set multimeter to Ω and probe adapter terminals as per following table.

REQUIRED TOOL	
FLUKE 115 MULTIMETER (P/N 529 035 868)	

ECM ADAPTER	BATTERY	READING
PIN	TERMINAL	Ω
1L	Negative (Ground)	Close to 0 Ω
2M		
3M		

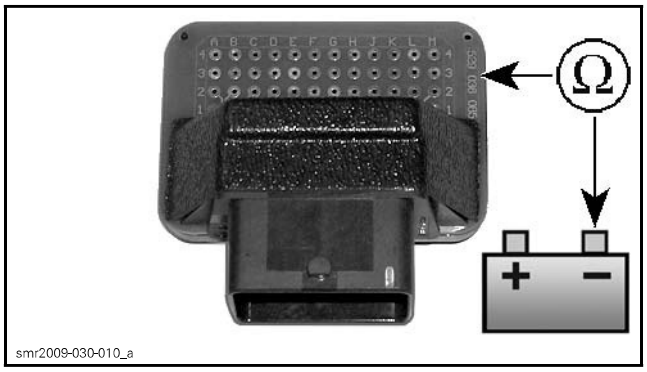

If any measurement is out of specification refer to *POWER DISTRIBUTION* subsection and check the following:

– Wiring and connections
– Engine ground
– Battery ground
– Frame ground.

Removing the ECM

NOTE: If a new ECM is to be installed, first read the procedures in *ECM REPLACEMENT* in this subsection.

1. Disconnect battery cables.

NOTICE Always disconnect the BLACK (–) battery cable first, then disconnect RED (+) cable.

2. Refer to appropriate subsection and remove the driver seat.

Installing the ECM

1. Reverse removal procedure however, pay attention to the following.

TIGHTENING TORQUE	
ECM screw	2.5 N•m ± 0.5 N•m (22 lbf•**in** ± 4 lbf•**in**)

2. Reconnect ECM connectors.
3. Reconnect battery cables.

⚠ WARNING

Always reconnect the RED (+) battery cable first, then reconnect BLACK (–) cable.

4. If a new ECM is installed, refer to *REPLACING THE ECM* in this subsection.

NOTICE Always replace ECM by the same part number or by a BRP approved equivalent.

Replacing the ECM

NOTE: Prior to replacing an ECM, ensure that all the recommendations in the general introduction of this subsection have been followed and all applicable testing procedures have been carried out.

When the ECM is replaced, data must be entered into the new ECM . Refer to *ECM MANUAL DATA ENTRY FOR ECM REPLACEMENT* further in this subsection.

ECM Data Entry for ECM Replacement

Use one of the following 2 methods to collect the required information. The 1st being the easiest:

1. Use BUDS2 to obtain the data from a saved "*.buds2" file on your PC computer.
2. Collect the information from the vehicle and on the Knowledge Center.

Once the required information has been collected, refer to *ENTERING THE COLLECTED INFORMATION INTO THE ECM*.

1st Collecting Method: Obtaining the Data from a Saved .buds2 File

1. Start BUDS2.

NOTE: It is not necessary to perform any connection. The PC computer can be used alone.

2. In BUDS2, click on the **Open a BUDS2 file** button.

Make sure you are at: C:\Program Files(x86)\BRP\BUDS2\Files.

IMPORTANT: Be sure to use the file that specifically matches the vehicle you are servicing.

NOTE: The file name structure is as follows:
VIN_date read (yyyymmdd)_hour read (hhmmss).mpem
Example: **2BPSBK8C68V000168_20090206_111640.buds2** Therefore: VIN: 2BPSBK8C68V000168 Date: 2009 02 06 Hour: 11h 16m 40s

3. Select the **Summary/ Vehicle** page tab and record (write down) the following information.
   1. Vehicle serial number
   2. Engine serial number
   3. Vehicle model number
   4. Customer name.

2nd Collecting Method: Collect the Information from the Vehicle and BOSSWeb

1. Record engine serial number.

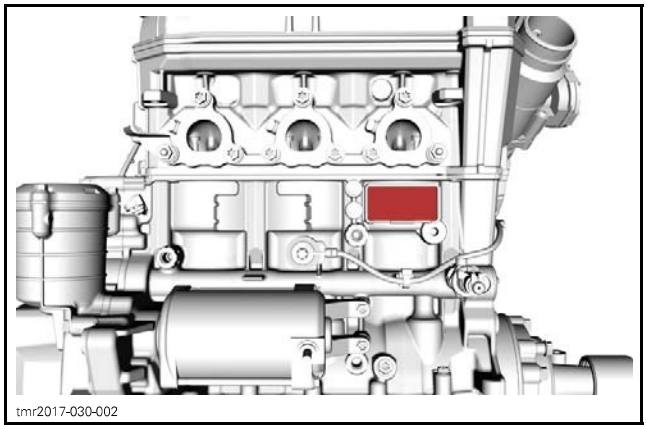

LH SIDE OF ENGINE
1. Engine serial number plate
2. Exhaust manifold

2. Record the following numbers from BOSSWeb. Look in **Sales** menu and choose **Unit history**.
   1. Vehicle serial number
   2. Vehicle model number
   3. Customer name.

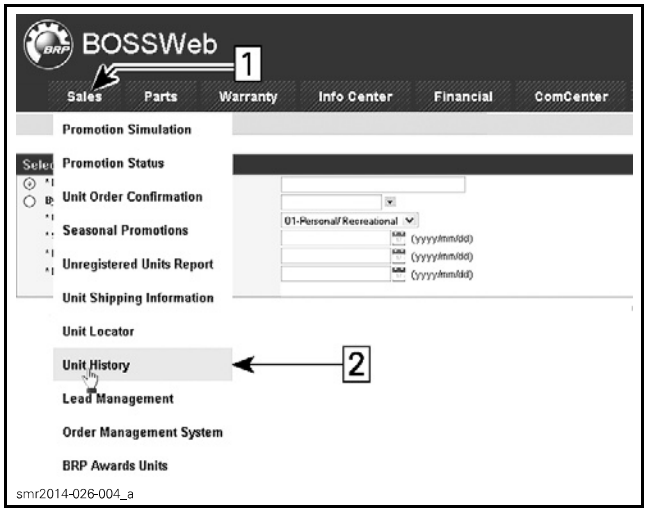

SERVICE, UNIT HISTORY
1. *Click on* SALES *menu*
2. *Select* Unit History

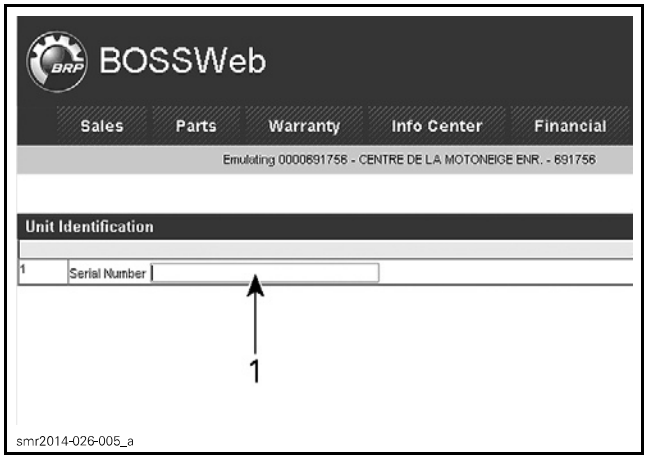

1. *Vehicle Serial Number here*

3. Enter the recorded data in the new ECM as detailed in *ENTERING THE COLLECTED INFORMATION INTO THE ECM*.

Entering the Collected Information Into the ECM

1. Connect the vehicle to BUDS2. Refer to *COMMUNICATION TOOLS* subsection.
2. In BUDS2, click the **Scan** button to read the new ECM.
3. Select the **Summary/ Vehicle** page tab and write all of the following information you recorded previously.
   1. Vehicle serial number (VIN)
   2. Engine serial number
   3. Vehicle model number
   4. Customer name.

NOTICE . Enter only the appropriate product model number as obtained when gathering the information.

NOTICE Pay particular attention when typing the V.I.N. and model numbers. Once **Write Data** button is pressed, the data cannot be modified.

4. Perform the *CLOSED THROTTLE RESET* procedure, refer to *ADJUSTMENTS* in this subsection.
5. Start the engine and ensure proper operation.
6. Reinstall any remaining removed parts.

FUEL INJECTOR

Accessing the Fuel Injector Connector

Remove air box cover and intercooler grill.

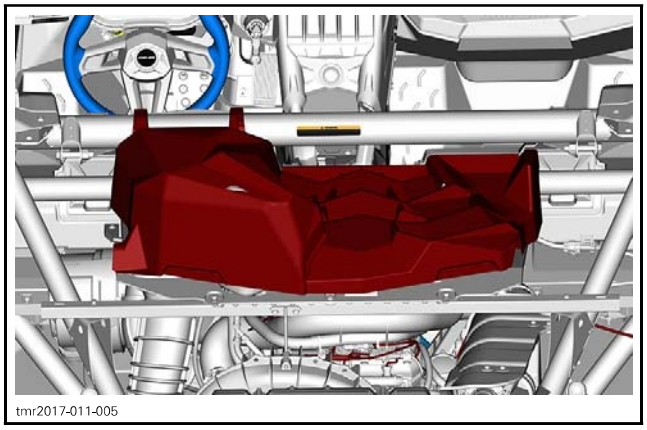

Remove rear body module, refer to *BODY* subsection

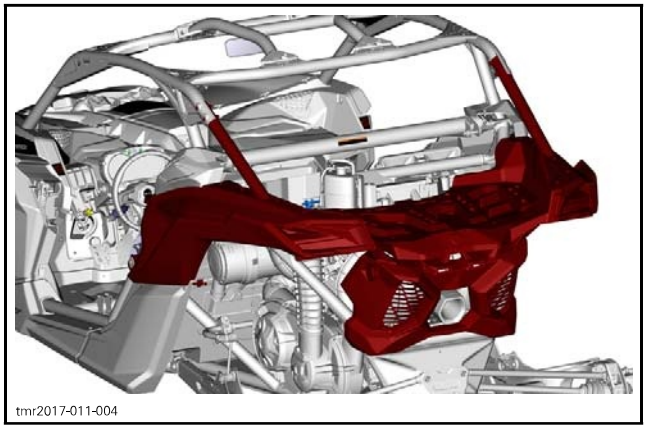

Unhook the coolant expansion tank and slide under the intercooler shroud

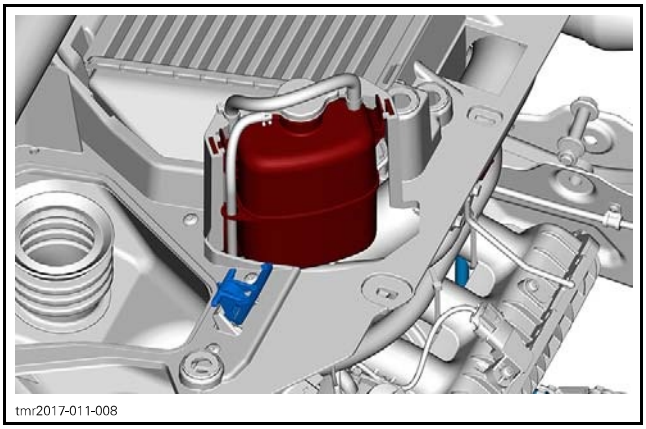
tmr2017-011-008

Unscrew the TCV.

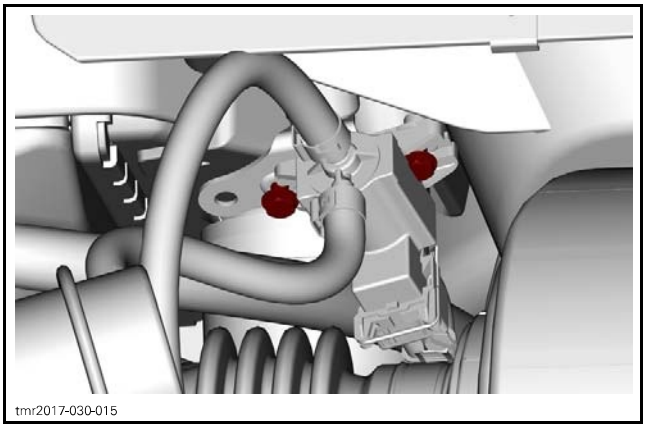
tmr2017-030-015

Remove intercooler shroud.

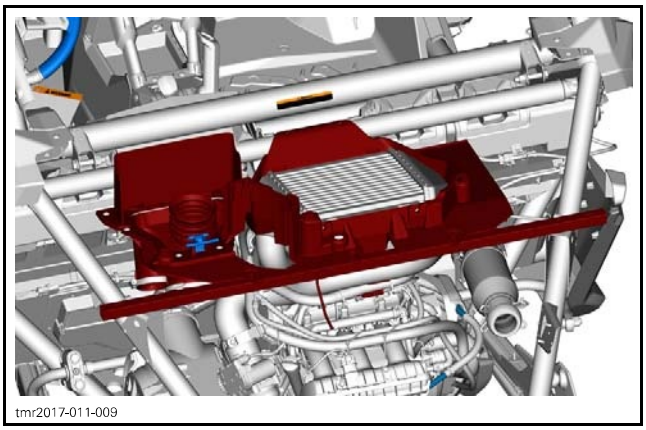
tmr2017-011-009

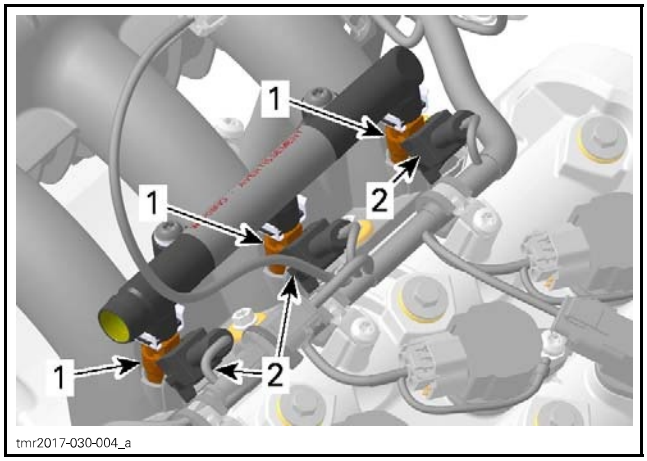

tmr2017-030-004_a

1. *Fuel Injectors*
2. *Fuel Injector connectors*

Testing the Fuel Injector Operation (Dynamic)

1. Connect vehicle to BUDS2 software. Refer to *COMMUNICATION TOOLS*
2. Start engine.
3. In BUDS2, click the following:
   – **Scan** button
   – **Functions** tab.
4. Using the BUDS2 software, shut down each engine cylinder one at a time by clicking on the button under the applicable cylinder.

If the engine RPM drops when clicking on a cylinder, the injector and the ignition of this cylinder are functioning normally.

If the engine RPM does not drop when clicking on a cylinder, this cylinder is not functioning properly. Check the following:

– Fuel injector operation. Refer to *TESTING THE FUEL INJECTOR OPERATION (STATIC)*.
– Spark plug and ignition coil. Refer to *IGNITION COILS AND SPARK PLUGS* subsection.
– Engine condition.

Testing the Fuel Injector Operation (Static)

NOTICE **After fuel injector activation using BUDS2, always crank engine in drowned mode to ventilate engine and prevent a potential backfire due to fuel accumulation in the engine.**

1. Connect vehicle to BUDS2 Refer to *COMMUNICATION TOOLS* subsection.
2. Click the **Scan** button to read the ECM.
3. On the **Functions** page, energize the fuel injector to be tested.

You should hear the injector functioning.

This will validate the injector mechanical and electrical operation.

If the injector does not function, carry out *TESTING THE FUEL INJECTOR RESISTANCE*.

Testing the Fuel Injector Balance

NOTICE **After fuel injector activation using BUDS2, always crank engine in drowned mode to ventilate the engine of fuel.**

1. Install a fuel pressure gauge as described in *FUEL PUMP PRESSURE TEST* of *FUEL TANK AND FUEL PUMP* subsection.
2. Connect vehicle to BUDS2 Refer to *COMMUNICATION TOOLS* subsection.
3. In **Functions**, activate fuel pump
4. Fuel pressure must be within specification. Refer to *FUEL TANK AND FUEL PUMP* subsection. Re-activate fuel pump as necessary.
5. In BUDS2, energize fuel injector **no. 1**.
6. Record the fuel pressure drop for injector **no. 1**.
7. Repeat the procedure for fuel injector **no. 2** and **no. 3** and record the pressure drop for each injector.
8. The maximum fuel pressure drop between injectors should not exceed the following specification:

MAXIMUM FUEL PRESSURE DROP ALLOWED BETWEEN FUEL INJECTORS
10 kPa (1.5 PSI)

If the pressure drop between fuel injectors is greater than the specification, replace the injector with the least pressure drop, then repeat the test.

9. Using the valve on the fuel pressure gauge, release the pressure in the system (if so equipped).
10. Remove fuel pressure gauge and reinstall removed parts.
11. Crank engine in drowned mode (accelerator held all the way in) to ventilate the engine of the fuel that was injected during the test.

⚠ WARNING

Always crank engine in drowned mode to ventilate all fuel that was injected during the test. Failure to do so may result in severe engine damage and injury.

Testing the Fuel Injector Leakage

Test Setup

1. Ensure there is enough fuel in fuel tank.
2. Ensure fuel pressure from fuel pump is within specification. Refer to *FUEL TANK AND FUEL PUMP* subsection.

NOTE: Keep the pressure gauge installed for the leakage test.

3. Connect vehicle to BUDS2 Refer to *COMMUNICATION TOOLS* subsection, Go to **Function** and execute a fuel pressure relief.
4. Remove fuel rail with injectors from engine however, **do not** disconnect fuel pump pressure hose from fuel rail. Refer to *FUEL INJECTORS* in this subsection.
5. Position fuel rail so that an appropriate container may be placed under the injectors to collect any fuel leakage.

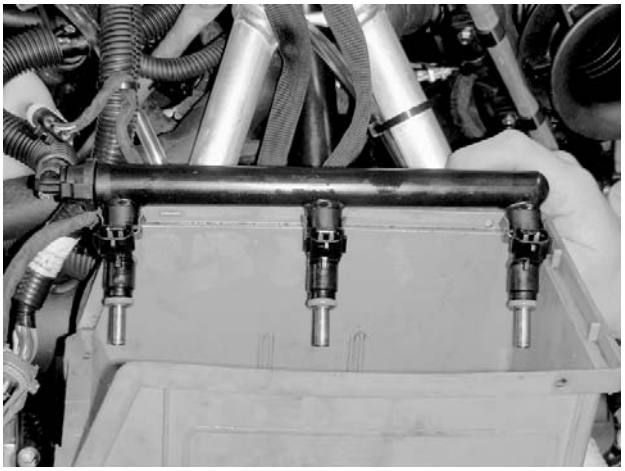

mmr2009-120-017

INJECTOR LEAKAGE TEST SETUP

6. Install key on D.E.S.S. post.

Testing the Leakage

1. With BUDS2, go to **Function** and activate the fuel pump.
2. Check for fuel leakage from the injector nozzles.
3. Monitor fuel pressure at fuel pressure gauge. If pressure drops below 372 kPa (54 PSI) during the test, re-activate fuel pump as necessary.

FUEL INJECTOR LEAKAGE	
TEST DURATION	SPECIFICATION
2 minutes	1 drop per minute maximum

If test is not within specification, replace the faulty fuel injector.

4. Properly reinstall fuel rail. Refer to *FUEL RAIL* in this subsection.
5. Reinstall remaining removed components.

⚠ WARNING

Wipe up any spilled fuel.

Testing the Fuel Injector Resistance

1. Ensure vehicle electrical power is off.
2. Disconnect connector "A" from the ECM, refer to *ECM CONNECTOR ACCESS* in this subsection.
3. Remove cover from the fuse box and locate fuse F5 (ign/inj/fuel pump fuse).
4. Check resistance value between fuse box and ECM connector terminals as follows.

REQUIRED TOOL	
FLUKE 115 MULTIMETER (P/N 529 035 868)	

NOTE: It is not necessary to remove the fuse. Refer to *POWER DISTRIBUTION* subsection for fuse box information.

INJECTOR	ECM	FUSE BOX	READING
CYLINDER	PIN	TERMINAL	Ω @ 20°C (68°F)
1	B3	B4	11.4 - 12.6 Ω
2	K1		
3	J1		

If resistance value obtained is correct, carry out *TESTING THE FUEL INJECTOR INPUT VOLTAGE*.

If resistance value obtained is incorrect, repeat test at HIC connector located beside the ECM.

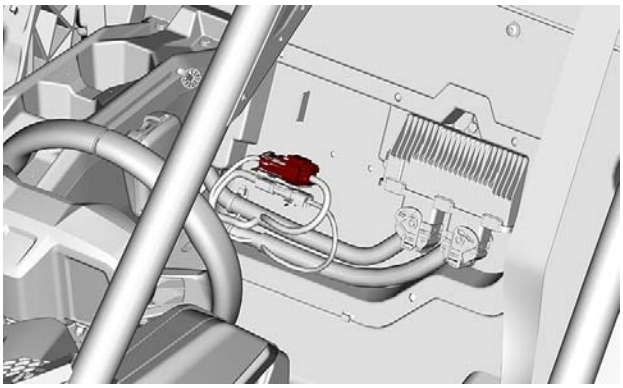

tmr2017-030-003

INJECTOR	ECM	HIC	READING
CYLINDER	PIN		Ω @ 20°C (68°F)
1	B3	D	11.4 - 12.6 Ω
2	K1		
3	J1		

If resistance value obtained is incorrect, remove injector connector and check resistance value between injector pins as follows. Refer to *FUEL INJECTOR ACCESS* in this subsection.

INJECTOR		READING
PIN		Ω @ 20°C (68°F)
1	2	11.4 - 12.6 Ω

If readings are out of specifications, replace injector.

Testing the Fuel Injector Input Voltage

1. Ensure both ECM connectors are properly connected.
2. Ensure the HIC connector is properly connected.
3. Disconnect the fuel injector connector. Refer to *FUEL INJECTOR CONNECTOR ACCESS* in this subsection.

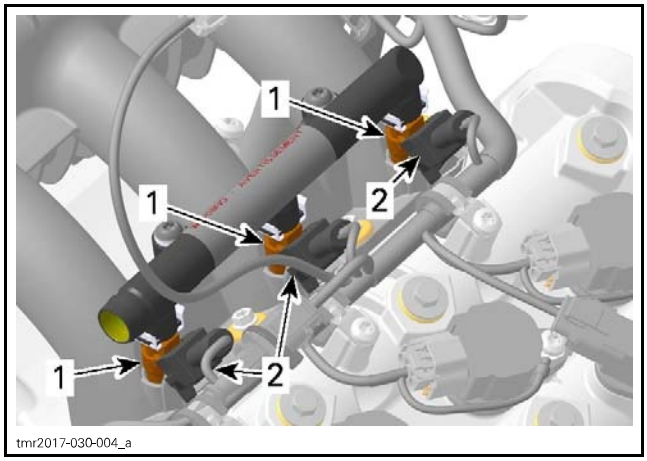

1. Fuel Injectors
2. Fuel Injector connectors

NOTE: Press against tab underneath connector as illustrated to unlock it.

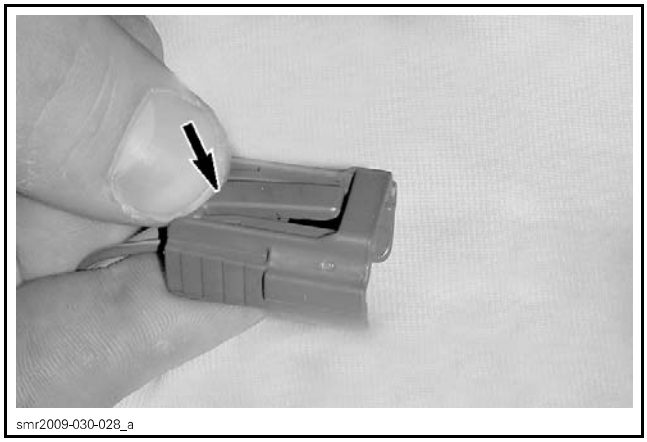

PRESS HERE TO UNLOCK

4. Ensure fuse F5 (Ign/Inj/fuel pump) is properly installed.
5. Install key on D.E.S.S post.
6. Momentarily press the START/STOP button to wake up the ECM without holding the brakes.

NOTE: It is not necessary to activate the injector since it is continuously powered when the ECM is awake.

7. Use a multimeter and set it to Vdc. Read voltage.

INJECTOR CYLINDER	INJECTOR WIRE	BATTERY TERMINAL	READING VOLTAGE
1	VIOLET/ BLUE	Battery Ground	Vdc
2			
3			

If injector input voltage is good, carry out the following:

– Circuit continuity test between injector and ECM, refer to *WIRING DIAGRAM* subsection.
– Test the injector signal, go to: *TESTING THE FUEL INJECTOR SIGNAL* subsection

If injector input voltage is not good, check the following:

– Fuse F5
– Circuit continuity between fuse F5 and injector. Refer to *POWER DISTRIBUTION* and *WIRING DIAGRAM* subsections.

Testing the Fuel Injector Signal

1. Connect vehicle to BUDS2 Refer to *COMMUNICATION TOOLS* subsection.
2. Select the **Functions** page tab.
3. Set multimeter to Vdc.

REQUIRED TOOL	
FLUKE 115 MULTIMETER (P/N 529 035 868)	

NOTE: Make sure multimeter is in the **Auto Range** mode.

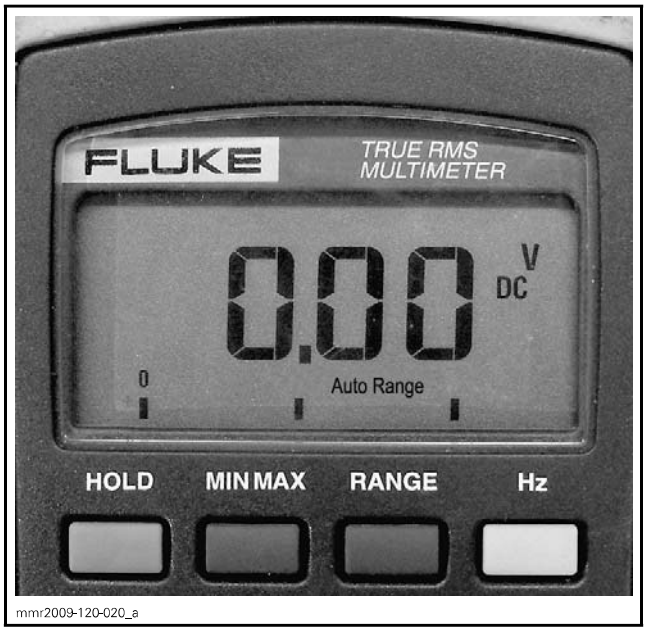

4. Press the **Hz** button so that the display shows Hz.

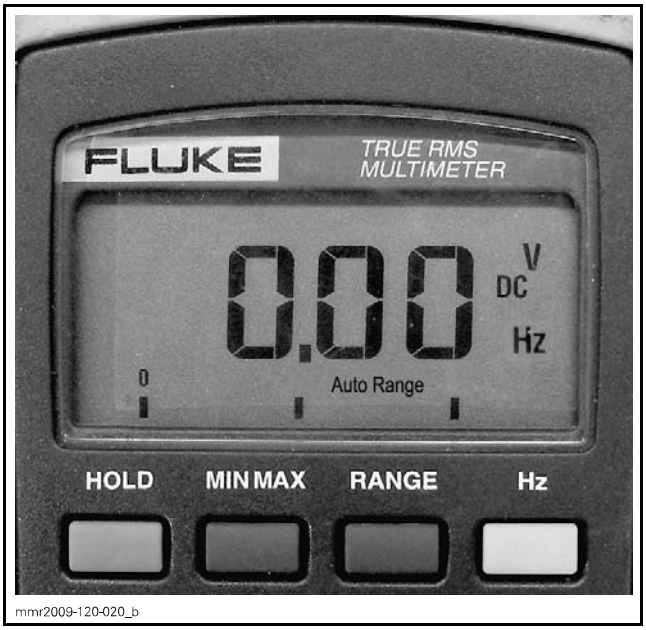

mmr2009-120-020_b

5. Connect the multimeter probes as indicated in the following table and using the BUDS2 software, activate each injector and read the frequency on the multimeter.

NOTE: The multimeter counts the pulses per seconds (Hertz) of current the ECM sends to the injector.

INJECTOR CYLINDER	INJECTOR WIRE	BATTERY TERMINAL	READING FREQ.
1	BROWN/ RED	Battery Ground	9 Hz
2	BROWN/ BLUE		
3	BROWN/ GREY		

If reading is good, the control circuit is functional.

If there is no reading, check continuity of control circuit (ECM to injectors). Refer to *WIRING DIAGRAM* for circuit details.

Fuel Injector Access

Remove air box cover and intercooler grill.

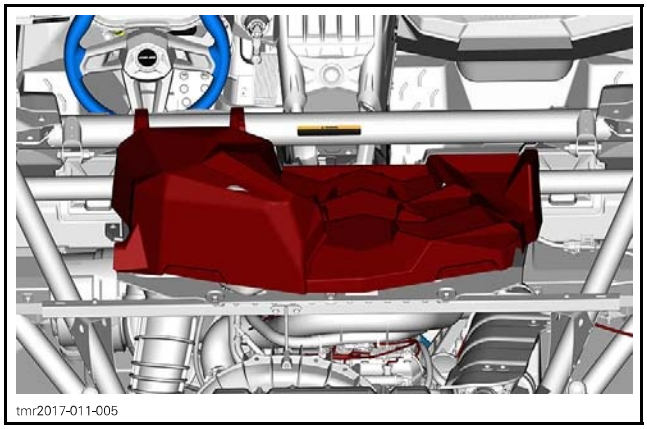
tmr2017-011-005

Remove rear body module, refer to *BODY* subsection.

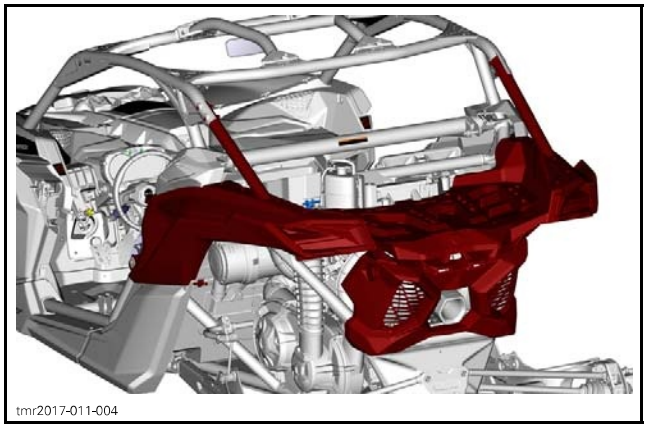
tmr2017-011-004

Unhook the coolant expension tank and slide under the intercooler shroud.

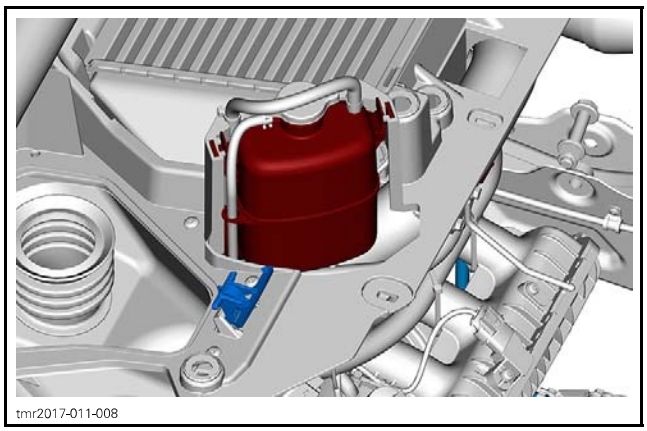
tmr2017-011-008

Unscrew the TCV.

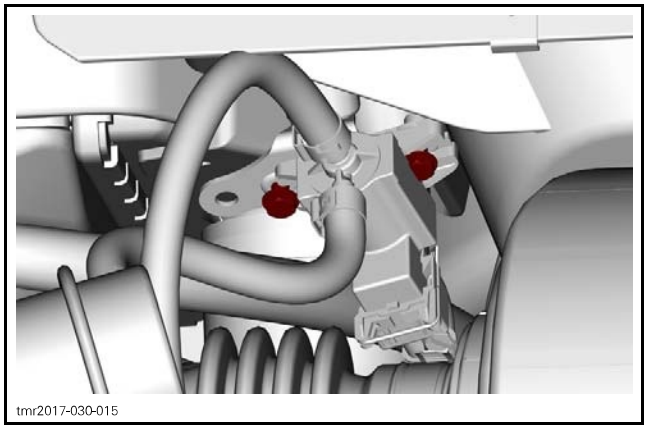
tmr2017-030-015

Remove intercooler shroud.

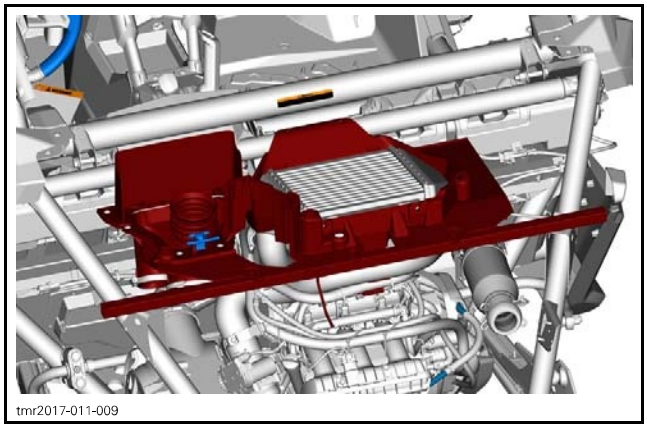
tmr2017-011-009

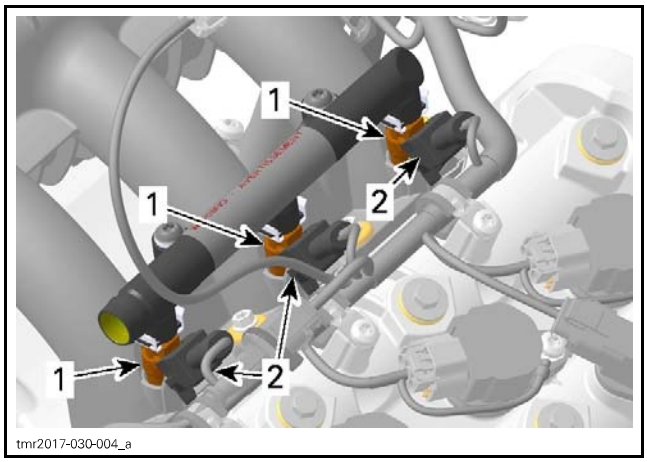

tmr2017-030-004_a

1. *Fuel Injectors*
2. *Fuel Injector connectors*

Removing the Fuel Injector

1. Connect vehicle to BUDS2 and, in the **Functions** page, do a fuel pressure relief.
2. Disconnect the battery, refer to *CHARGING SYSTEM* subsection.

⚠ WARNING

When removing or disconnecting the fuel injectors, always disconnect the battery.

3. Remove parts required for access to the fuel rail and fuel injectors, refer to *FUEL INJECTOR ACCESS*.
4. Disconnect the fuel injector electrical connectors.
5. Disconnect the fuel pressure hose from the fuel rail.

REQUIRED TOOL	
FUEL HOSE DISCONNECT TOOL (P/N 529 036 037)	


lmr2006-008-010

NOTE: Wrap a rag around the hose end to catch any fuel leakage.

6. Remove the fuel rail mounting screws.

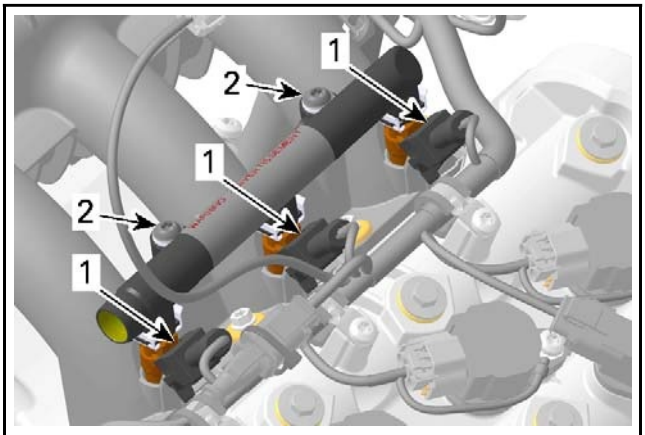

tmr2017-030-004_b

1. *Injector connectors*
2. *Fuel rail mounting screws*

7. Pull on fuel rail to remove the fuel rail and injectors from the engine.
8. Remove the fuel injector retaining clips from the fuel rail.

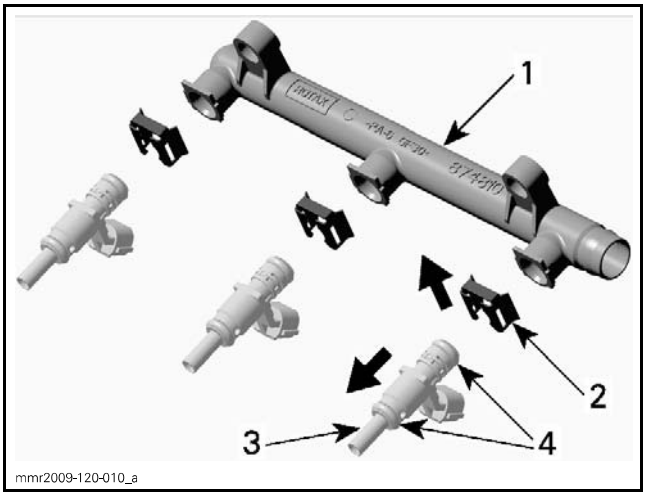

TYPICAL - FUEL RAIL ASSEMBLY
1. *Fuel rail*
2. *Fuel injector retaining clip*
3. *Injector*
4. *Injector O-rings*

9. Pull the fuel injector(s) out of the fuel rail.

Installing the Fuel Injector

For the installation, reverse the removal procedure however, pay attention to the following details.

NOTICE **If installing the removed injector(s), ensure injector O-rings are in good condition. Replace O-rings as required.**

1. Apply a thin film of engine oil to O-rings to ease insertion in rail.
2. Install fuel injector with your hand. Do not use any tool.

FUEL INJECTOR INSTALLATION		
O-RINGS	New	Lubricate with engine oil

3. Firmly push injector until it bottoms out.
4. Install fuel rail.

TIGHTENING TORQUE	
Fuel rail retaining screw	9 N•m ± 1 N•m (80 lbf•**in** ± 9 lbf•**in**)

5. Apply engine oil on O-rings of fuel pressure hose fitting.

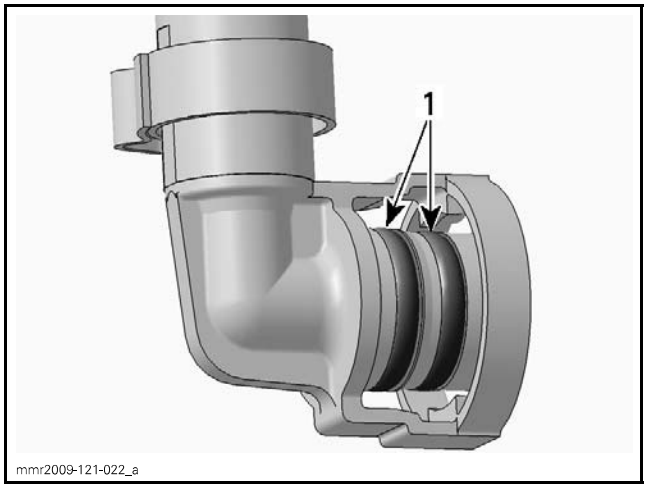

FUEL PRESSURE HOSE FITTING
1. *Apply oil on O-rings*

6. Connect fuel pressure hose to fuel rail.

IMPORTANT: Push fuel hose fitting on fuel rail until you hear a "click". Try pulling on fuel hose fitting to ensure it is properly locked.

Pressurize the fuel system and check for fuel leaks. Refer to *FUEL SYSTEM PRESSURIZATION* in *FUEL TANK AND FUEL PUMP* subsection.

⚠ WARNING

Failure to pressurize the fuel system and checking for fuel leaks may result in severe injury or a life threatening situation should a leak occur.

7. Reinstall all remaining removed parts.

THROTTLE BODY (ETC (ELECTRONIC THROTTLE CONTROL))

Throttle Body (ETC) Description

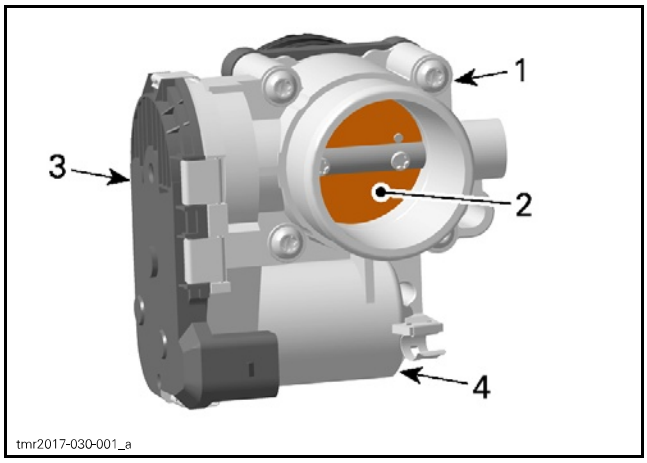

1. *Throttle body*
2. *Throttle plate*
3. *TPS (Throttle Position Sensor) (inside)*
4. *ETA (Electric Throttle Actuator) (electric motor inside)*

Electric Throttle Actuator (ETA)

The electric throttle actuator (ETA) is a DC motor on the throttle body that regulates the throttle plate via a drive gear. It receives its control signal from the ECM. Pulse width modulation (PWM) is used to control the motor.

Throttle Plate Operating Positions

Two torsional springs are connected to the throttle plate. A main spring and another one in a plunger mechanism.

When there is no power to the throttle actuator (ETA), the plunger mechanism maintains the throttle plate at a rest position. This also serves as the limp home position.

When the throttle plate is opened by the ETA as commanded by the ECM, it acts against the main spring. If the ETA failed, the return spring would bring the throttle plate back to the limp home position.

ECM	ENGINE	THROTTLE BODY
OFF	Stopped	Throttle actuator: Off. Throttle plate: Rest position, maintained opened at approximately 8° (1). This is also the limp home position.
ON	Not started	Throttle actuator: On. Throttle plate: Moves from the rest position to approximately 15°. It then moves back to the rest position. This is the diagnostic mode where the rest position, actuator opening force to overcome the return springs and the motor return rate are monitored. If any of these parameters are out of range, a fault code is initiated.
ON	Not started. Very cold environment	Throttle actuator: On. Throttle plate: Execute check for ice on throttle plate. If throttle plate does not reach the fully closed position, throttle plate is moving until closed position can be reached.
ON	Started. Normal operation at idle	Throttle actuator: On. Throttle plate: Moves from the rest position to idle position (approximately 1-3°) according to ECM injection and ignition maps. Throttle plate is opened and closed as necessary to control the idle speed.
ON	Started. Normal operation at various RPM	Throttle actuator: On. Throttle plate: Opens and closes according to ECM torque management priorities.
(1) Degree values are given from the fully closed position.		

Throttle Body (ETC) Faults and Effects

NOTE: Among other things, a weak or broken spring and a sticky throttle plate are validated by the throttle body diagnostic mode.

FAULT	EFFECT
Partial failure of TAS sensor (one internal sensor only)	Limp home mode. Engine speed limited to idle. ECM will use the remaining TAS sensor. Fault code set and beeper activated to emit warning signals. Check engine light is turned ON. Driveability could be reset by releasing and reapplying the throttle.
Complete failure of TAS sensor (both internal sensors)	Limp home mode. Engine speed limited to 2500 RPM. Fault code set and beeper activated to emit warning signals. Check engine light is turned ON.
Any throttle body failure	Limp home mode. Engine speed limited to 2500 RPM. Engine speed can still be increased up to 3200 RPM using the throttle lever. Fault code set and beeper activated to emit warning signals. Check engine light is turned ON.

NOTE: Refer to *DIAGNOSTIC AND FAULT CODES* and *INTELLIGENT THROTTLE CONTROL* (iTC) subsections for more informations.

Throttle Body (ETC) Access

Remove the CVT duct.

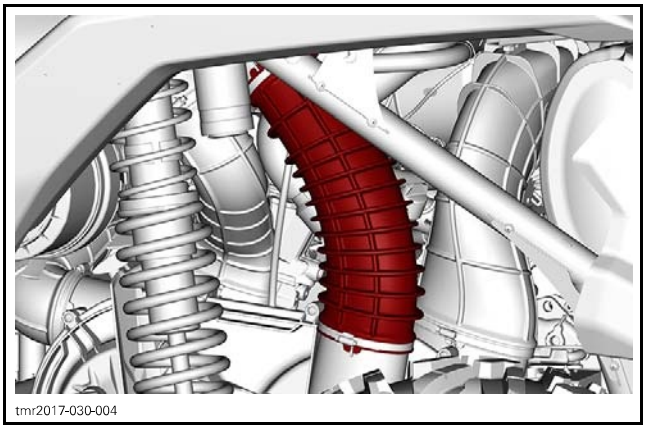

tmr2017-030-004

Disconnect intercooler hose.

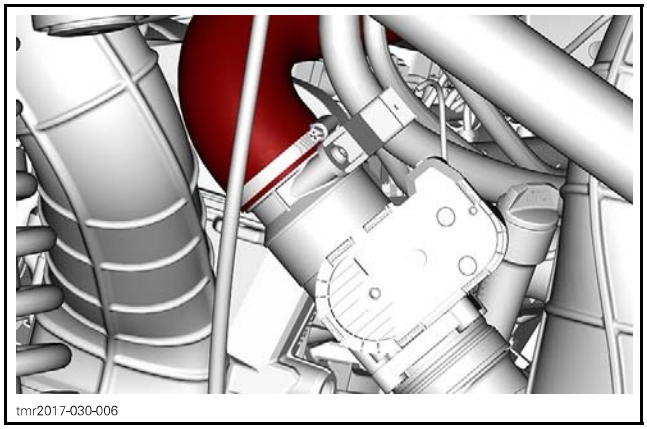

tmr2017-030-006

Disconnect electrical connectors.

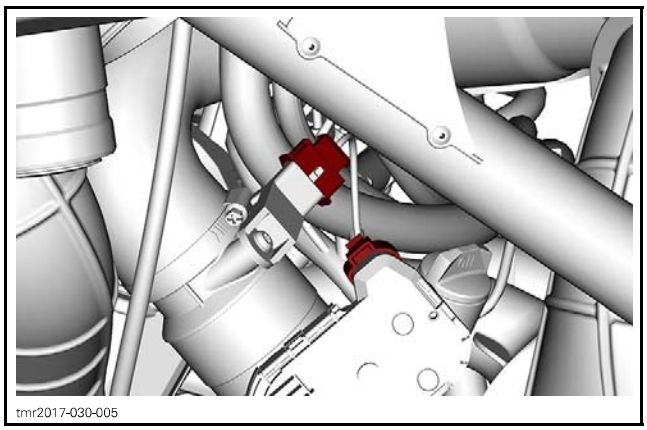

tmr2017-030-005

Loosen clamp.

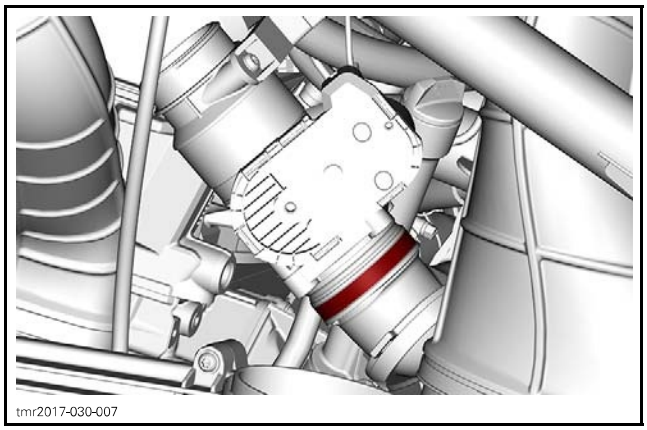

tmr2017-030-007

Lubricating the Throttle Body (ETC)

No lubrication is required.

Testing the Electric Throttle Actuator (ETA)

Electric Throttle Actuator (ETA) Test with BUDS2

1. Connect vehicle to BUDS2, refer to *COMMUNICATION TOOLS* subsection.
2. Install key on D.E.S.S. post.

3. Press the START/STOP button without holding the brakes to wake up the ECM.
4. In BUDS2, select:
   – **Scan** button
   – **Setting** page tab.

NOTE: Use the **Setting** page to confirm ETA movement. The Monitoring page will not read the actual ETA movement.

5. Slowly depress the throttle to WOT. The ETA should go from almost 10% to 100%.

If result is out of specification, carry out a *THROTTLE POSITION SENSOR INITIALIZATION*. Refer to *THROTTLE POSITION SENSOR (TPS)* in this subsection.

NOTE: The ETA is reset at the same time as the TPS.

After the reset, test ETA again.

If the result is still out of specification, check wire continuity between ECM and throttle body before assuming the ETA is at fault.

Inspecting the Throttle Body (ETC)

1. Remove parts required to access throttle body, refer to *THROTTLE BODY (ETC) ACCESS*.
2. Carry out the following:
   – Inspect throttle body for cleanliness.
   – Ensure throttle plate opens fully and smoothly.
   – Check for corroded or damaged wiring or damaged ETC connectors.

Testing the Throttle Body (ETC) (Dynamic)

1. Remove the parts required to access the throttle body (ETC), refer to *REMOVING THE THROTTLE BODY (ETC).*
2. Remove the air inlet hose from the throttle body.
3. Observe the throttle plate with the engine stopped.

The throttle plate should be in the rest position (slightly opened).

⚠ CAUTION Keep your fingers out of the throttle plate area while the ECM turns on. The throttle actuator will cycle. This could cause serious finger injuries as throttle plate quickly moves.

4. As you observe the throttle plate, have someone press the START/STOP button to wake up the ECM.

The throttle plate should cycle quickly from the rest position to a partially open position (approximately 15°), then back to the rest position.

5. Install the tether cord on the D.E.S.S. post.

The throttle plate should cycle again.

6. As you observe the throttle plate, have someone gradually and evenly pull in the throttle lever, then release it in the same way.

The throttle plate should open then close according to throttle lever position however, the movement of the throttle plate may not be linear with the displacement of the throttle lever.

If any test failed, proceed with *TESTING THE THROTTLE BODY (ETC) (STATIC).*

Testing the Throttle Body (ETC) (Static)

⚠ CAUTION First ensure the ECM is off. Do not move the throttle plate using your fingers. Otherwise, should the START/STOP button be pressed, the ECM would turn on and quickly cycle the throttle plate which could cause serious finger injury.

1. Using a blunt tool, push in on the throttle plate and ensure it opens smoothly within the throttle body.

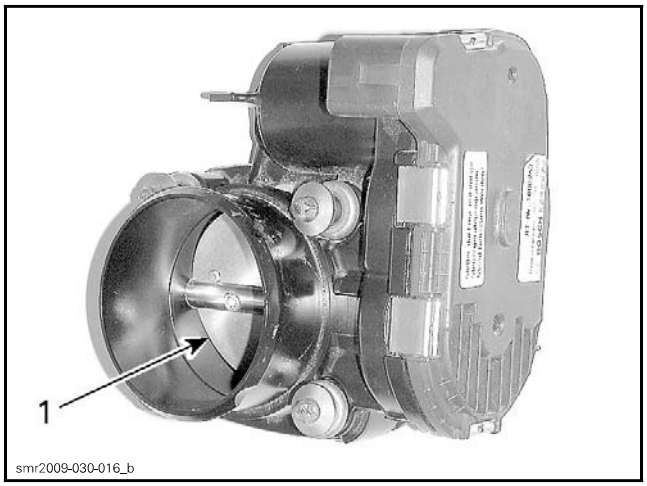

1. Push here to open

NOTE: The throttle plate must open fully and return freely to the rest position (slightly opened) when released.

2. Push throttle plate closed as indicated in following illustration. It must close completely and return freely to the rest position (slightly opened) when released.

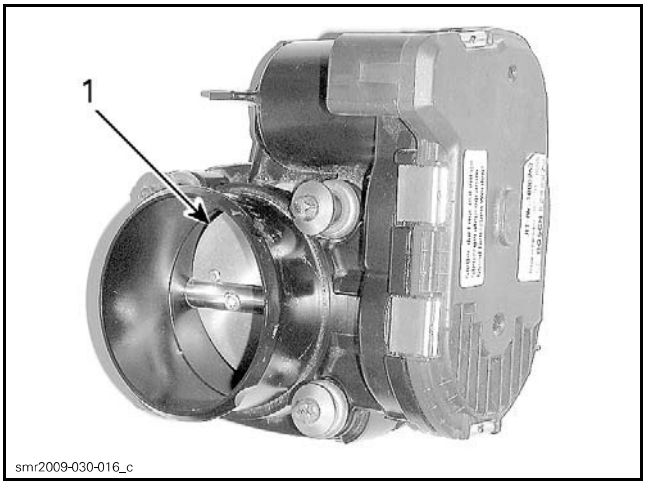

1. Push here to close

If the throttle plate does not move smoothly or does not return freely to the rest position, the problem is mechanical. Check for dirt accumulation on throttle plate shaft. It may also be an actuator or gear problem. Replace throttle body as necessary.

If throttle plate operates normally, the problem is electrical. Check electric throttle actuator (ETA) wiring continuity, throttle position sensor (TPS) and throttle accelerator sensor (TAS).

Cleaning the Throttle Body (ETC)

1. Remove throttle body from intake manifold. Refer to *REMOVING THE THROTTLE BODY (ETC)* further in this subsection.
2. Check throttle body cleanliness using a flashlight. Fully open throttle plate and verify:

– Throttle body bore
– Throttle plate edge.

Look for:

– Dirt
– Oily surfaces
– Carbon and dirt deposits on throttle plate and the surrounding bore.

3. Clean as necessary. Use a throttle body cleaner such as GUNK INTAKE MEDIC or an equivalent

NOTICE **Only use an appropriate throttle body cleaner that will not damage O-rings and EFI sensors.**

4. To avoid getting dirt into engine, spray cleaner on a clean rag then rub rag against throttle plate and bore. A toothbrush may also be used.
5. Gently open throttle plate and hold fully open to clean all surfaces.
6. To remove residual dirt, spray cleaner on throttle plate and throttle bore.
7. Reinstall all removed parts.

Removing the Throttle Body (ETC)

⚠ CAUTION **Ensure the key is removed from D.E.S.S. post and battery cables are disconnected so that nobody can activate the electrical system, otherwise the ECM would turn on and the throttle actuator (ETA) would cycle. This could cause serious finger injury as the throttle plate moves quickly.**

1. Remove parts required to access throttle body, refer to *THROTTLE BODY (ETC) ACCESS*.
2. Loosen gear clamp and remove throttle body from intake manifold.
3. Disconnect BPS and ETC connectors.

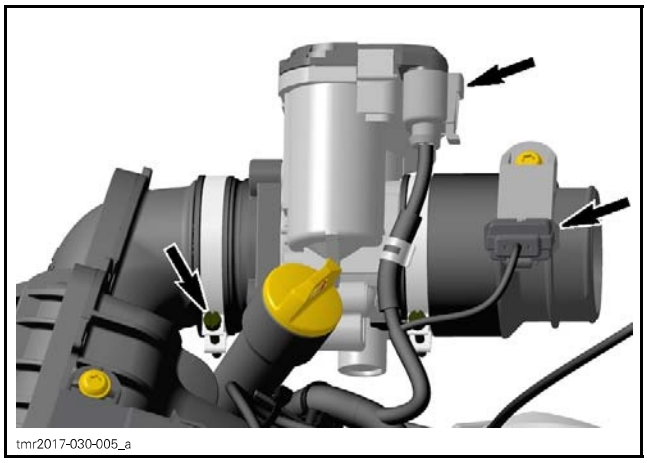

Installing the Throttle Body (ETC)

Installation of the throttle body is the reverse of the removal procedure. However, pay attention for the following details.

1. Perform the *THROTTLE POSITION SENSOR INITIALIZATION* reset procedure. Refer to *THROTTLE POSITION SENSOR (TPS)* in this subsection.
2. Install all remaining removed parts, refer to applicable subsections.
3. Start engine and ensure proper idle and throttle control.

THROTTLE POSITION SENSOR (TPS)

TPS Description

The TPS is part of the throttle body (ETC).

The throttle position sensor (TPS) is a double potentiometer that sends signals to the ECM that are proportional to the throttle plate angle.

As a first troubleshooting step, always check for applicable fault codes using BUDS2 software.

Throttle Position Sensor Initialization

NOTE: The TPS initialization procedure **must** be carried out whenever the throttle body (ETC) is replaced, unless an ECM first initialization reset is carried out.

This operation performs a reset of the TPS basic values in the ECM. This reset is very important as the TPS values are part of the basic parameters for all fuel mapping calculations and control of several settings such as for idle speed, LIMP HOME mode and maximum RPM of the engine.

NOTICE **An improperly set TPS may lead to improper idle speed (too low or too high), poor engine performance, poor engine starting and engine stop on deceleration, fault codes and possible engine damage. Emission compliance may also be affected.**

Use the BUDS2 software to perform this setting. Refer to *COMMUNICATION TOOLS AND B.U.D.S.* subsection.

1. Install key on D.E.S.S. post.
2. Press the START/STOP button to wake up the ECM.
3. Ensure throttle lever is completely released.
4. In BUDS2, select
   - **Settings** button
   - **ECM** page tab
   - **Initialization Tab** page
   - **Reset TPS**.

Reset is completed.

Exit BUDS2.

NOTE: If the throttle valve was not within the allowed range when the Closed Throttle Reset was carried out, no error message would be displayed. However, a fault code would be set when the engine is started.

5. Start engine and make sure it operates normally through its full engine RPM range.
6. Check for fault codes using BUDS2, If a fault code related to the throttle actuator appears, clear it, then carry out another Closed Throttle Reset procedure. To clear faults, refer to *DIAGNOSTIC AND FAULT CODES* subsection.

Testing the TPS Wear

1. With the engine turned off, slowly press on the throttle lever and pay attention for smooth operation without physical stops.
2. Activate the electrical system to wake up the ECM.
3. Connect vehicle to BUDS2 software. Refer to *COMMUNICATION TOOLS* subsection.
4. Select the following:
   - **Measurements** tab
   - **ECM** tab.
5. Slowly and regularly move the throttle lever.
6. Observe the Throttle Opening indication movement

NOTE: The indication should move gradually and regularly as you move the throttle lever. If the TPS indication is erratic or suddenly drops off, it may indicate a worn TPS that needs to be replaced. An initial slight delay after the throttle lever is moved and before the indication starts to move is normal.

If the indication behavior is not as expected, proceed with the following steps.

7. Manually move the throttle plate in the throttle body using a blunt tool (without sharp tip).

⚠ CAUTION **Do not move throttle plate with your fingers. Otherwise, if ECM should turn off, it would quickly close the throttle plate which could cause finger injury.**

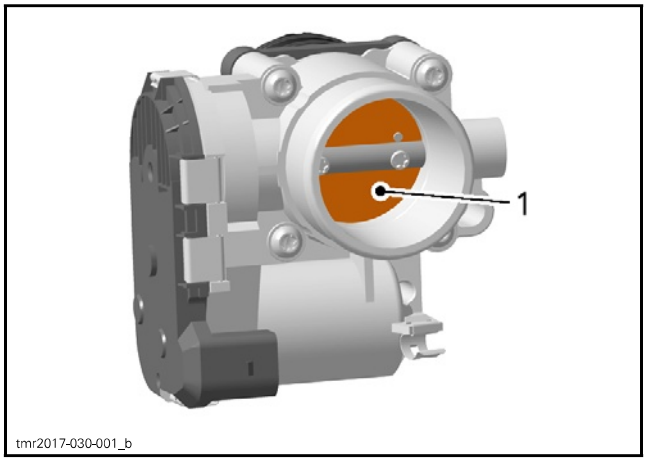

1. Push here

8. Check the indication movement again.
– If the indication moves as expected, check the throttle accelerator sensor (TAS). Refer to *THROTTLE ACCELERATOR SENSOR (TAS)* in this subsection.
– If the indication does not move as expected, perform the *TPS RESISTANCE TEST* in this subsection.

CRANKSHAFT POSITION SENSOR (CPS)

CPS TROUBLESHOOTING

When troubleshooting a CPS fault, take into account that a CPS fault can be triggered by bent or missing encoder wheel teeth.

Push START/STOP button and crank engine. If engine does not start within 15 seconds check for fault codes using BUDS2.

CPS and CPS Connector Location

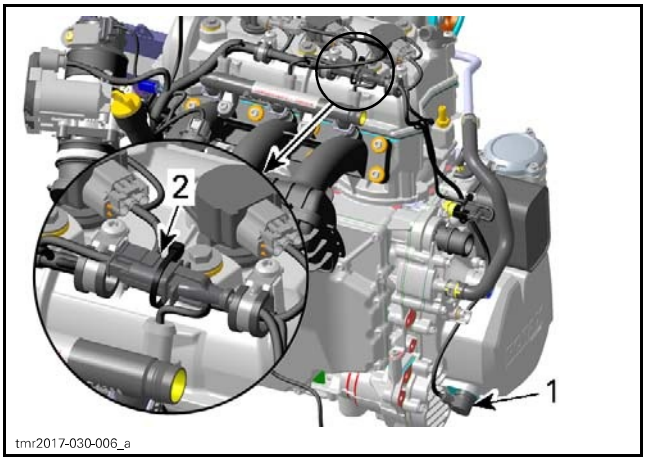

RH SIDE OF ENGINE
1. *CPS location*
2. *CPS connector location*

Testing the CPS Resistance at ECM Connector

1. Disconnect ECM-A connector from the ECM and connect it to the ECM adapter.

REQUIRED TOOL	
ECM ADAPTER TOOL (P/N 529 036 166)	

2. Set multimeter to Ω.

REQUIRED TOOL	
FLUKE 115 MULTIMETER (P/N 529 035 868)	

3. Measure the resistance of the sensor as per following table.

ECM ADAPTER		READING
PIN		Ω @ 20°C (68°F)
H1	K2	775 - 950 Ω

If resistance is as specified, test continuity of wiring between ECM-A and CPS connectors. Refer to *WIRING DIAGRAM* subsection.

If resistance value is not as specified, reconnect ECM-A connector to the ECM and refer to *TESTING THE CPS RESISTANCE AT CPS CONNECTOR*.

Testing the CPS Resistance at CPS Connector

1. Cut locking tie and disconnect CPS connector.

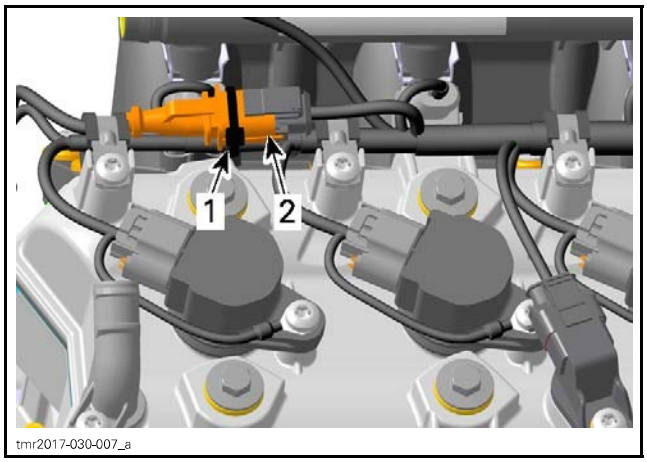

1. *Locking tie*
2. *CPS connector*

2. Probe CPS connector terminals as per following table.

CPS		READING
PIN		Ω @ 20°C (68°F)
1	2	775 - 950 Ω

If resistance is not within specifications, replace the CPS.

If resistance tests good, carry out *TESTING THE CPS OUTPUT VOLTAGE*.

Testing the CPS Output Voltage

1. Remove fuse F5.
2. Cut locking tie and disconnect the CPS connector.

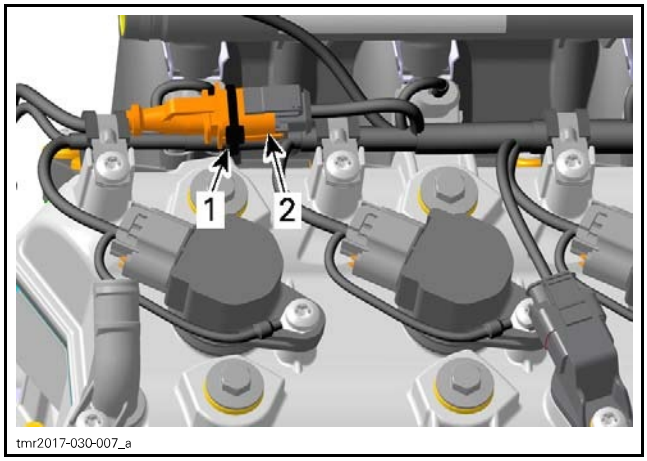

1. *Locking tie*
2. *CPS connector*

3. Probe CPS connector terminals while cranking engine as per following table.

CPS		READING
PIN		VOLTAGE
1	2	1 - 2 Vac min.

If voltage is out of specification, inspect wiring/connectors. Replace CPS if wiring is good.

If voltage is within specification, the problem may be related to the ECM.

4. Reconnect CPS connector and install all removed parts.

Replacing the CPS

1. Remove parts required to access the CPS.
2. Take note of factory CPS wire harness routing for reinstallation.
3. Cut harness locking ties and disconnect CPS connector.

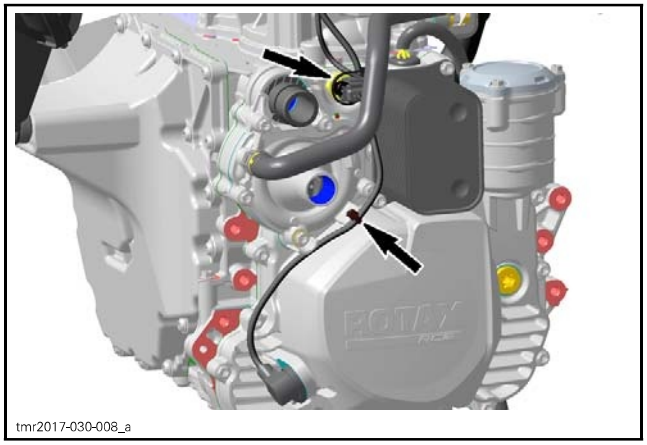

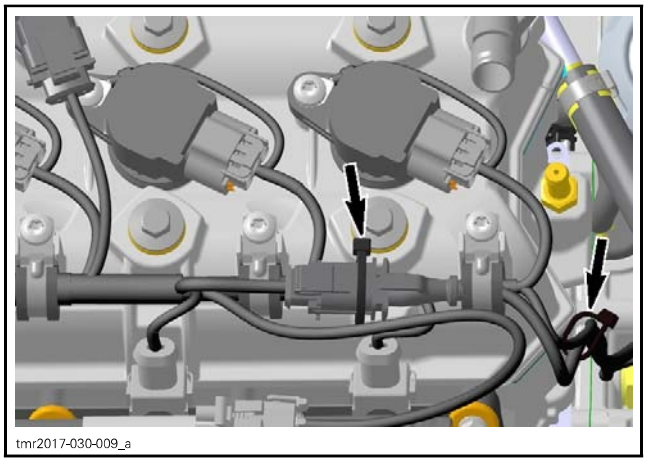

4. Remove CPS retaining screw and pull on CPS to remove it.

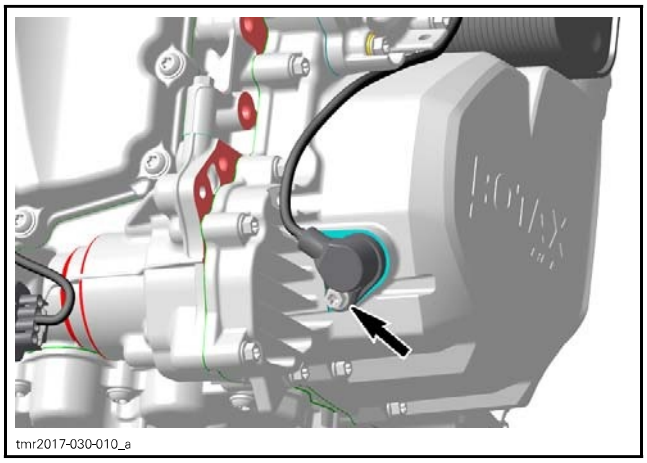

5. Install new CPS.

CPS INSTALLATION	
O-RING	SERVICE PRODUCT
	Apply engine oil on O-ring
Retaining SCREW	TIGHTENING TORQUE
	9 N•m ± 1 N•m (80 lbf•**in** ± 9 lbf•**in**)

6. Route and secure CPS harness using harness clamp and locking ties as noted prior to removal.

CAMSHAFT POSITION SENSOR (CAPS)

CAPS Location

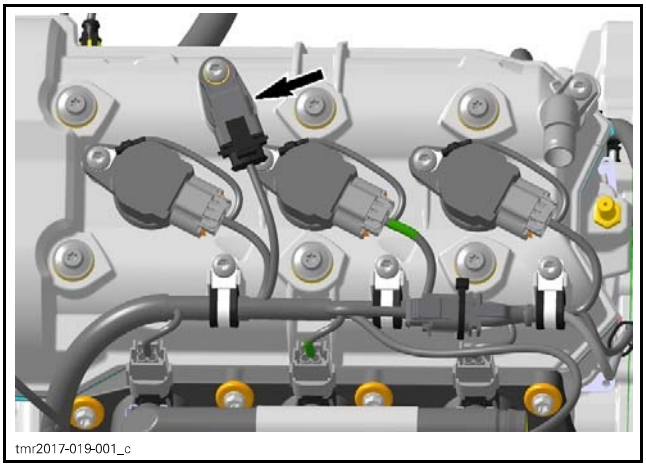
tmr2017-019-001_c

Testing the CAPS Voltage (Harness Side)

1. Remove the parts required to access the CAPS.
2. Disconnect CAPS connector.

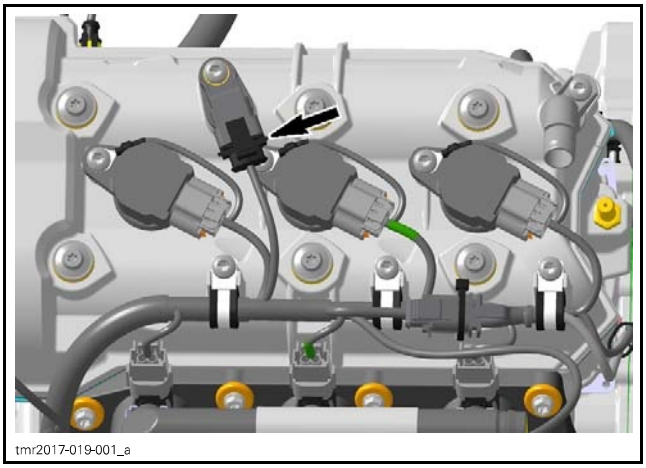
tmr2017-019-001_a

3. Install key on D.E.S.S. post.
4. Press the START/STOP button to wake up the ECM without holding the brakes.
5. Probe harness connector terminals as per following table.

CAPS		READING
PIN		VOLTAGE
3	1	Battery Voltage

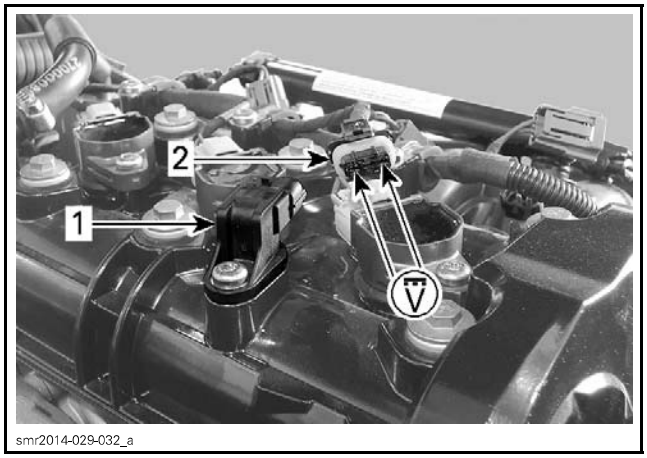

smr2014-029-032_a

TYPICAL
1. CAPS
2. CAPS connector

If battery voltage is read, proceed with *TESTING THE CAPS (DYNAMIC)* further in this subsection.

If battery voltage is not read, probe circuit as per following table.

CAPS	BATTERY	READING
PIN	TERMINAL	VOLTAGE
3	Battery Ground	Battery Voltage

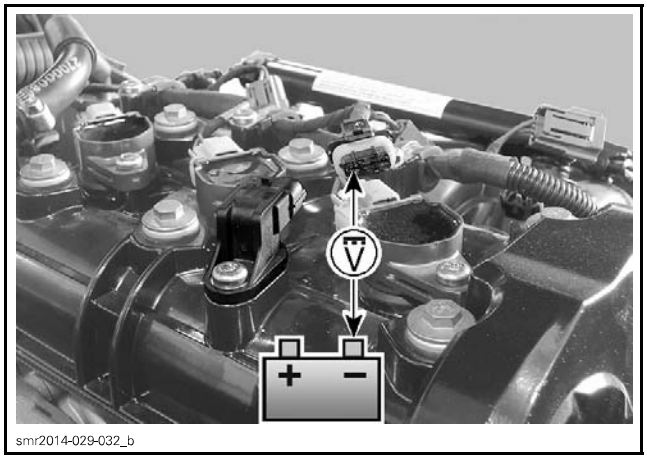

smr2014-029-032_b

TYPICAL

If voltage is read to battery ground, check continuity of ground circuit between CAPS pin 1 and ECM-A connector pin 4D. Repair or replace wiring and connectors.

If voltage is not read to battery ground, carry out *TESTING THE CONTINUITY OF CAPS POWER CIRCUIT*.

Testing the Continuity of CAPS Power Circuit

1. Remove the F5 fuse.

2. Use the FLUKE 115 MULTIMETER (P/N 529 035 868) and select Ω.
3. Read resistance of the CAPS circuit as per following table.

CAPS	FUSE BOX	READING
PIN	TERMINAL	Ω
3	B4	Close to 0 Ω

If continuity is good, wiring and connectors are functional.

If a high resistance or an open circuit is measured, refer to *WIRING DIAGRAM* and check the following:

– Continuity from CAPS connector pin 3 to HIC connector pin D.
– Continuity from HIC connector pin D to fuse box contact B4.

Pay attention to connector pin contact and junction JT-1 (VT/BU).

Repair or replace wiring and connectors as required.

4. Reinstall all removed parts.

Testing the CAPS (Dynamic)

1. Remove the parts required to access the CAPS.
2. Remove CAPS sensor from engine.
3. Back-probe connector and read voltage as follows.

NOTE: To safely probe wire terminals through the back of the connector, use the following tool or an equivalent.

REQUIRED TOOL	
FLUKE AUTOMOTIVE BACK PROBE PIN (P/N TP40)	

NOTICE **Do not use sharp end probes. They could damage the connector seal.**

Probes can be inserted at the end of the FLUKE SUREGRIP INSULATED TEST LEADS (P/N TL224).


tl224

4. Briefly press the START/STOP button to wake up the ECM.
5. Install the tether cord cap on the D.E.S.S. post.
6. Read voltage as per following tables.

CAPS		CAPS CONDITION	READING
PIN		SENSOR END	VOLTAGE
3	2	Free	Close to 0 Vdc

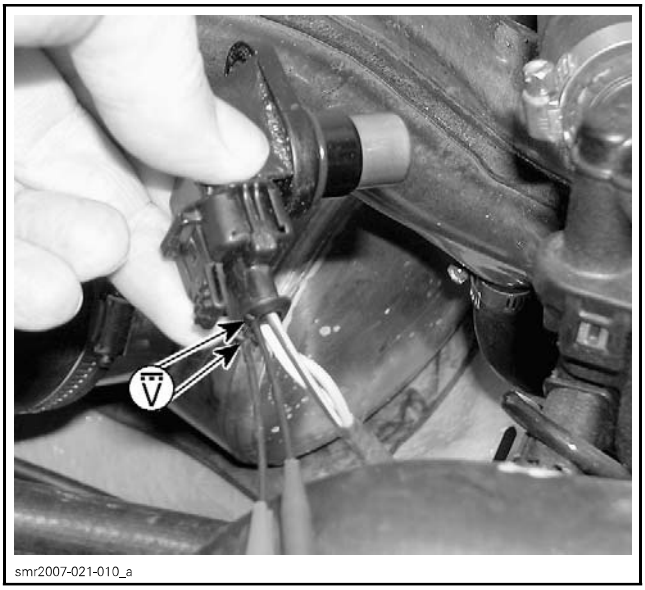

smr2007-021-010_a

TYPICAL

CAPS		CAPS CONDITION	READING
PIN		SENSOR END	VOLTAGE
3	2	Metallic Object on Sensor	Battery Voltage

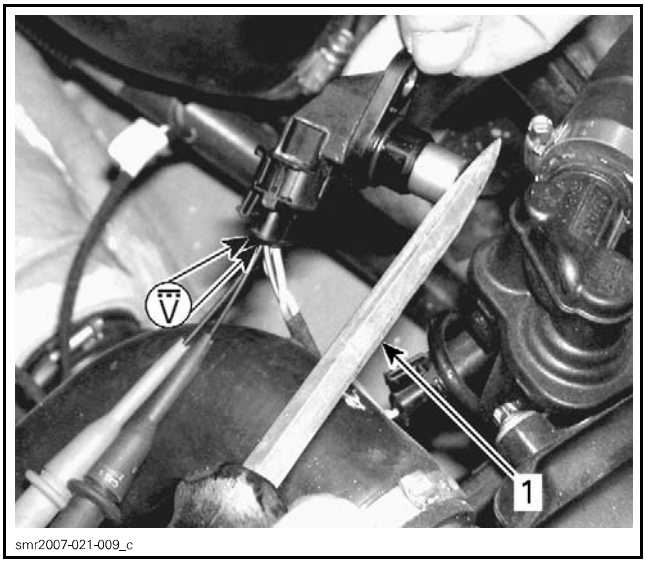

smr2007-021-009_c

TYPICAL
1. Metallic object

If voltage is as specified, repair or replace wiring and connectors between sensor and ECM.

If wiring is good, check ECM. Refer to *ENGINE CONTROL MODULE (ECM)*.

If battery voltage is not measured as specified, try a new CAPS.

Replacing the CAPS

1. Disconnect CAPS connector.

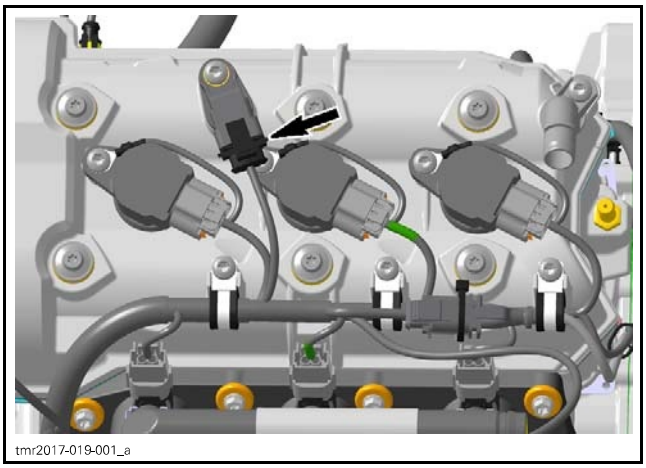
tmr2017-019-001_a

2. Unscrew the CAPS retaining screw.
3. Pull CAPS from engine.
4. Install the new CAPS.

NOTICE Be sure to install new O-ring on the new CAPS.

CAPS INSTALLATION	
O-RING	SERVICE PRODUCT
	APPLY ENGINE OIL ON O-RING

CAPS INSTALLATION	
CONNECTOR	SERVICE PRODUCT
	DIELECTRIC GREASE (P/N 293 550 004)
RETAINING SCREW	TORQUE
	9 N•m ± 1 N•m (80 lbf•**in** ± 9 lbf•**in**)

MANIFOLD ABSOLUTE PRESSURE AND TEMPERATURE SENSOR (MAPTS)

NOTE: This sensor is a multifunction device. It measures manifold absolute pressure and intake temperature for air flow calculations.

MAPTS Access

To access the MAPTS, remove the CVT ducts.

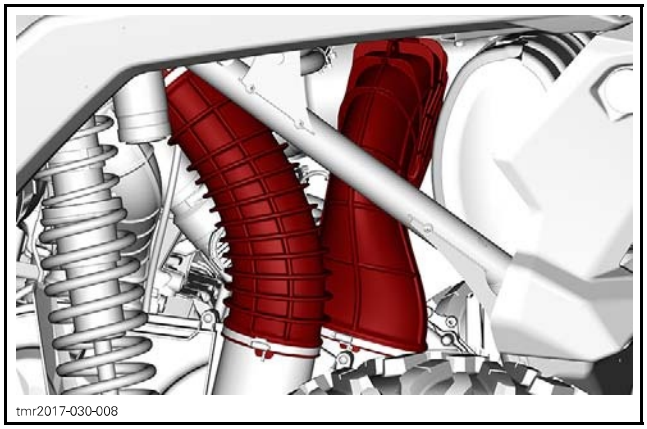
tmr2017-030-008

The MAPTS is located on the intake plenum.

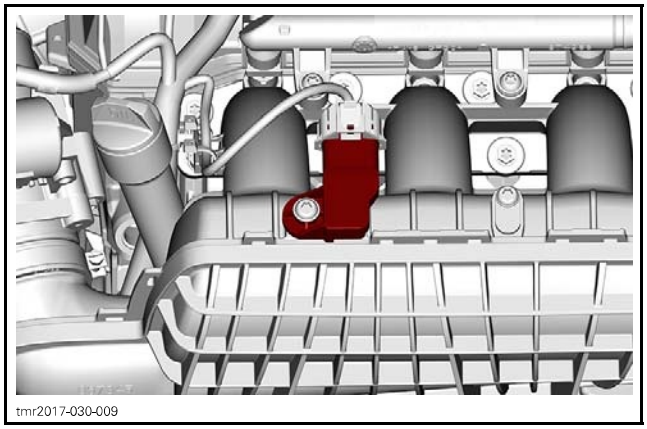
tmr2017-030-009

MAPTS Pressure Function

Before the engine is started, when power is applied to the system, the sensor measures the ambient air atmospheric pressure. The ambient

pressure is, at that moment, stored in the ECM. Thereafter, once the engine is started, it measures the air pressure in the intake manifold at operating RPMs.

The sensor must be correctly installed on the intake manifold. Otherwise, the MAPTS could generate a fault code for an unexpected sensor range at idle when it reads the atmospheric pressure. If this is the case, remove sensor and check for oil or dirt on its end and if problem persists, check throttle plate condition/position and the wiring harness. Perform the following tests.

Testing the MAPTS (Pressure Function)

1. Connect vehicle to BUDS2. Refer to *COMMUNICATION TOOLS* subsection.
2. Select the following:
   - **Measurements** page tab
   - **ECM** page.
3. Look for and take note of the MAPTS pressure reading while the engine is stopped.

NOTE: The indicated intake air pressure in BUDS2 must be within 3.4 kPa (.5 PSI) of local atmospheric pressure when the engine is stopped.

MAPTS PRESSURE FUNCTION QUICK TEST			
RESULT	SERVICE ACTION		
NO READING	Circuit Continuity Test of MAPTS Pressure Function	MAPTS Input Voltage Test	Repair or replace wiring
VALUE IS OUT OF RANGE	Replace MAPTS		

4. Perform the same test with a new MAPTS and compare both readings.

Testing the MAPTS Input Voltage

1. Remove parts required to access the MAPTS, refer to *MAPTS ACCESS*.
2. Remove electrical connector from MAPTS.

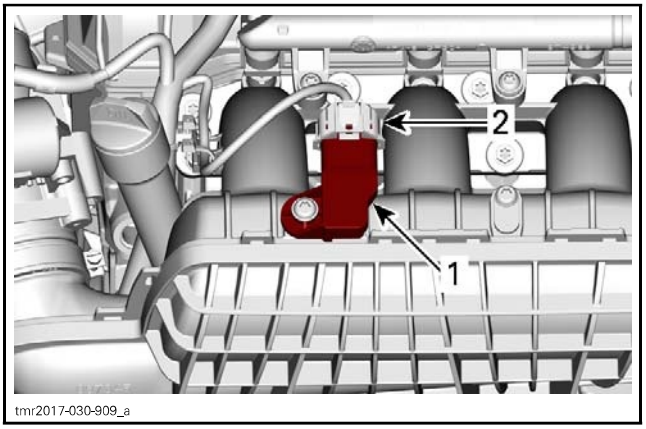

1. *MAPTS*
2. *MAPTS connector to remove*

3. Briefly push START/STOP button.
4. Set multimeter to Vdc, measure for MAPTS input voltage as per following table.

REQUIRED TOOL	
FLUKE 115 MULTIMETER (P/N 529 035 868)	

MAPTS		READING
PIN		VOLTAGE
1	3	5 Vdc

If voltage test is good, replace the MAPTS.

If voltage test is not good, carry out *TESTING THE MAPTS CIRCUIT CONTINUITY (PRESSURE FUNCTION)*.

Testing the MAPTS Circuit Continuity (Pressure Function)

1. Disconnect the ECM-A connector from the ECM and connect it to the ECM adapter tool.

REQUIRED TOOL	
ECM ADAPTER TOOL (P/N 529 036 166)	

2. Set multimeter to Ω and check continuity of the following circuits.

REQUIRED TOOL	
FLUKE 115 MULTIMETER (P/N 529 035 868)	

ECM ADAPTER	MAPTS	READING
PIN		Ω
B4	3	Close to 0 Ω
G4	4	
H2	1	

If resistance is not within specification, repair or replace the wiring harness between ECM connector and the MAPTS. Refer to *WIRING DIAGRAM.*

MAPTS Temperature Function

The MAPTS also monitors the temperature of the air in the intake manifold.

Quick Testing the MAPTS (Temperature Function)

1. Connect vehicle to BUDS2. Refer to *COMMUNICATION TOOLS* subsection.
2. Select the following:
   – **Measurements** page tab
   – **ECM** page.
3. Look for and take note of the MAPTS temperature reading while the engine is stopped.

NOTE: If the complete vehicle is at room temperature, BUDS2 should display the ambient air temperature at the intake manifold.

4. Perform the same test with a new MAPTS and compare both readings.

If the engine's MAPTS temperature reading is significantly different than the new MAPTS, replace it.

NOTE: Both sensors must feel same ambient air temperature.

If there is no reading, carry out *TESTING THE MAPTS RESISTANCE (TEMPERATURE FUNCTION).*

Testing the MAPTS Resistance (Temperature Function)

1. Disconnect the MAPTS connector.
2. Test MAPTS resistance at the sensor as per following tables.

REQUIRED TOOL	
FLUKE 115 MULTIMETER (P/N 529 035 868)	

MAPTS		READING
PIN		Ω
1	2	Refer to MAPTS TEMPERATURE SENSOR TABLE

MAPTS TEMPERATURE SENSOR TABLE		
TEMPERATURE		Ω
°C	°F	MAPTS
- 40	- 40	40528 to 56935
- 10	- 14	8103 to 10919
20	68	2193 to 2863
80	176	294 to 368
120	248	98 to 122

If resistance is not within specification, replace the MAPTS.

If resistance tests good, **reconnect** the MAPTS and proceed with the following steps.

3. Disconnect the ECM-A connector.
4. Install ECM-A connector on the ECM adapter tool.

REQUIRED TOOL	
ECM ADAPTER TOOL (P/N 529 036 166)	

5. Using a multimeter, recheck resistance value as per following table.

ECM ADAPTER		READING
PIN		Ω
H2	H3	Refer to MAPTS TEMPERATURE SENSOR TABLE

MAPTS TEMPERATURE SENSOR TEST RESULTS			
RESULT	SERVICE ACTION		
NO READING	Circuit Continuity Test of MAPTS Temperature Function	MAPTS Input Voltage Test	Repair or replace wiring
INCORRECT RESISTANCE VALUE	Check condition of connector pins, replace MAPTS		
CORRECT RESISTANCE VALUE	Try a new ECM		

Testing the MAPTS Circuit Continuity (Temperature Function)

ECM ADAPTER	MAPTS	READING
PIN		Ω
H2	1	Close to 0 Ω
H3	2	

Repair or replace wiring as required.

Replacing the MAPTS

1. Disconnect MAPTS connector and remove the MAPTS from the intake manifold.

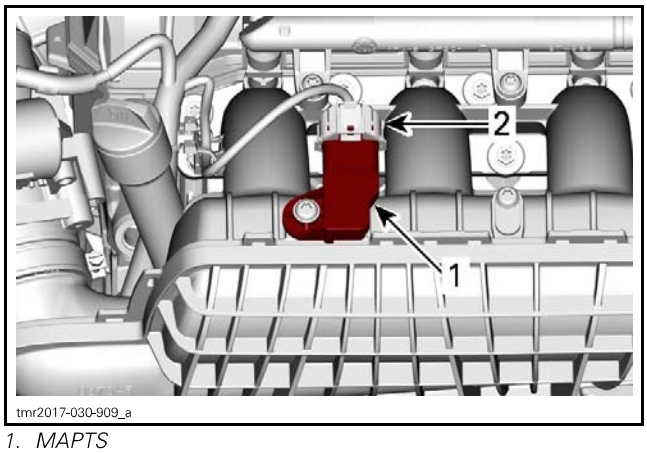

tmr2017-030-909_a

1. MAPTS
2. MAPTS connector

2. Install new MAPTS as per following table.

TIGHTENING TORQUE	
MAPTS retaining screw	4.5 N•m ± 0.5 N•m (40 lbf•**in** ± 4 lbf•**in**)

COOLANT TEMPERATURE SENSOR (CTS)

Overheat Warning

The CTS will cause the engine overheat warning to come on when the coolant temperature is above 110°C (230°F).

CTS Access

The CTS is located on the RH side of the engine, between the water pump and oil cooler.

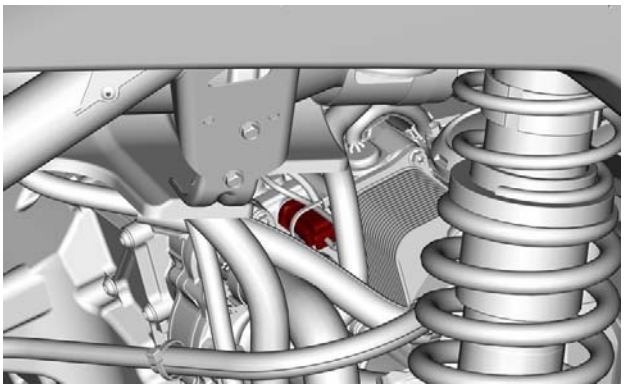
tmr2017-030-010

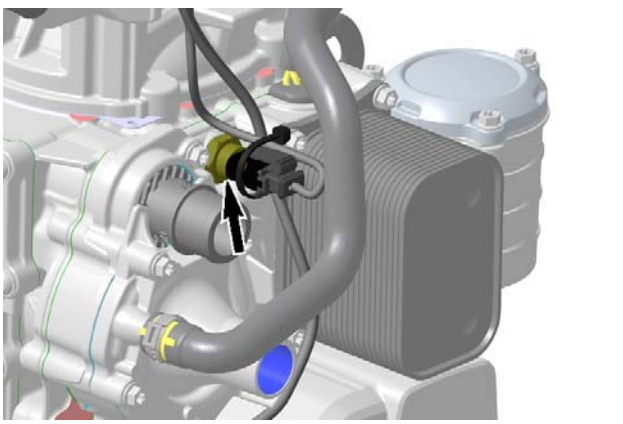
tmr2017-030-011_a

CTS - RH SIDE OF THE ENGINE

Testing the CTS using BUDS2

1. Connect the vehicle to BUDS2. Refer to *COMMUNICATION TOOLS* subsection.
2. Select the following:
   - **Measurements** page tab
   - **ECM** page.
3. Look for the engine temperature indication.

The engine temperature gauge in BUDS2 should provide an indication of the actual engine coolant temperature. Otherwise, perform *TESTING THE CTS RESISTANCE*.

Testing the CTS Resistance

1. Disconnect the CTS connector.
2. Test the resistance of the sensor as per following tables.

CTS		READING
PIN		Refer to CTS TEMPERATURE SENSOR TABLE
1	2	

CTS TEMPERATURE SENSOR TABLE			
TEMPERATURE		Ω	
°C	°F	LOW	HIGH
- 40	- 40	38400	52600
- 10	14	8200	10,600
0	32	5900	6900
20	68	2200	2800
80	176	295	350
120	248	105	120

NOTE: To test sensor at various temperatures, remove sensor and use a heat gun, ice and a thermometer.

If resistance is out of specification, replace the CTS.

If resistance test is good, proceed with the following steps.

3. Reconnect the CTS connector.
4. Disconnect the ECM-A connector.
5. Install ECM-A connector on adapter tool.

REQUIRED TOOL	
ECM ADAPTER TOOL (P/N 529 036 166)	

6. Recheck resistance from the ECM connector as per following table.

REQUIRED TOOL	
FLUKE 115 MULTIMETER (P/N 529 035 868)	

ECM ADAPTER		READING
PIN		Refer to CTS TEMPERATURE SENSOR TABLE
A1	J2	

If resistance value is correct, refer to *REPLACING THE ECM*.

If resistance value is incorrect, repair the connectors or replace the wiring harness between ECM connector and the CTS.

Replacing the CTS

1. Drain coolant, refer to *PERIODIC MAINTENANCE PROCEDURES* subsection.
2. Cut locking ties of wiring harnesses and move wiring aside for access.

NOTE: Take note of wiring and locking tie position before removal.

3. Disconnect CTS connector.
4. Remove CTS from engine.
5. Install new CTS and torque as specified.

TIGHTENING TORQUE	
CTS	16 N•m ± 2 N•m (142 lbf•**in** ± 18 lbf•**in**)

6. Reinstall remaining removed parts.

NOTE: Ensure to reinstall wiring harness as noted prior to removal.

7. Refill and bleed the cooling system, refer to *PERIODIC MAINTENANCE PROCEDURES* subsection.

BOOST PRESSURE SENSOR (BPS)

The BPS is a piezoresistive absolute pressure sensor. Refer to *TURBO CHARGER AND INTERCOOLER* subsection for more details.



BPS

Accessing the BPS

Remove the CVT duct

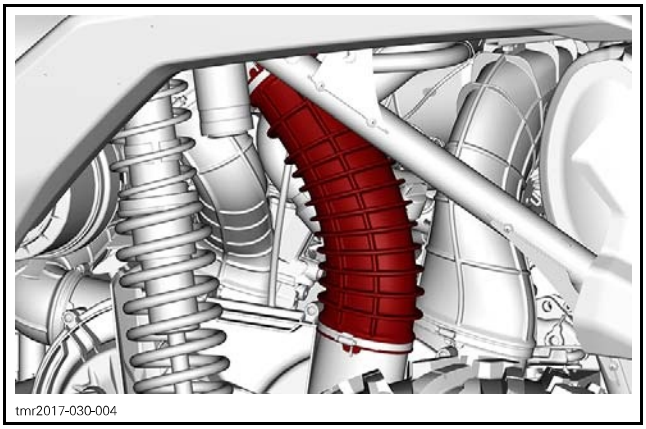
tmr2017-030-004

The BPS is located on the air hose between the ETA and the inter cooler.

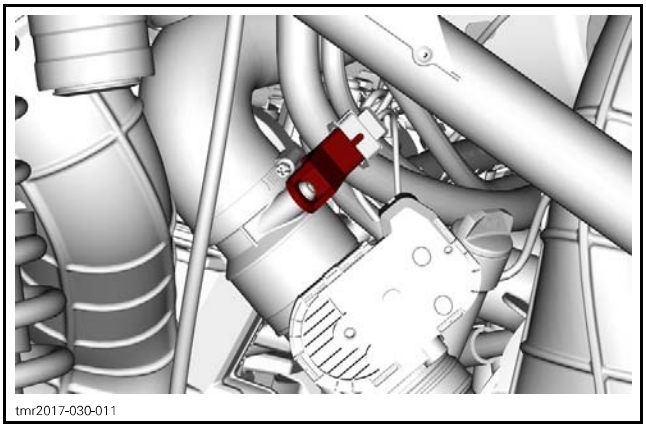
tmr2017-030-011

BPS Troubleshooting

BPS pin 3 to ECMA - G3 is the signal wire.

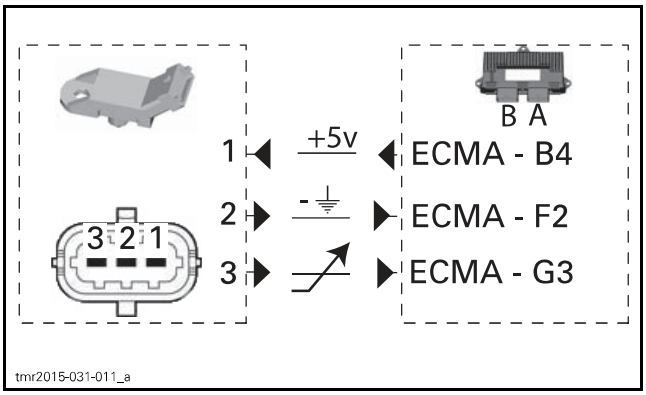

tmr2015-031-011_a

The BPS is powered at key on.

Testing the BPS Voltage

1. Disconnect connector from BPS.
2. Turn ignition key on.
3. Read voltage as per following table.

BPS CONNECTOR	VOLTAGE
Terminal 1 to battery ground	Approx. 5 V
Terminal 2 to battery ground	Approx. 0 V
Terminal 3 to battery ground	Approx. 0 V

If voltage measured is as specified, replace the BPS.

If voltage measured is not as specified, refer to *TESTING THE CONTINUITY OF BPS WIRING HARNESS*.

Testing the Continuity of BPS Wiring Harness

1. Disconnect ECM connector "A" from the ECM and connect it to the ECM adapter tool.

REQUIRED TOOL	
ECM ADAPTER TOOL (P/N 529 036 166)	
FLUKE 115 MULTIMETER (P/N 529 035 868)	

2. Test for circuit continuity as per following table.

BPS CONNECTOR	ECM CONNECTOR	RESISTANCE
Pin 1	B4	Close to 0 Ω continuity
Pin 2	F2	
Pin 3	G3	

3. If wiring harness is good, check ECM. Refer to *ENGINE CONTROL MODULE (ECM)* in this subsection.
4. If a high resistance or an open circuit is measured, repair or replace wiring and connectors between the ECM and the BPS.

Replacing the BPS

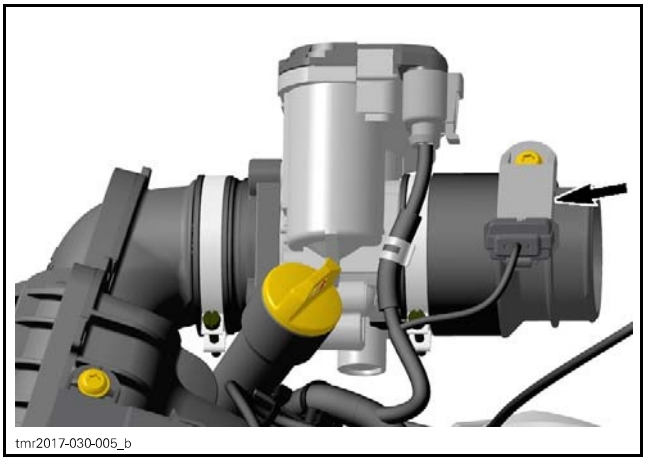
tmr2017-030-005_b

TIGHTENING TORQUE	
BPS retaining screw	6 N•m ± 0.7 N•m (53 lbf•**in** ± 6 lbf•**in**)

TURBO CONTROL VALVE (TCV)

The TCV is a pulse width modulated solenoid. Refer to *TURBO CHARGER AND INTERCOOLER* subsection for more details.

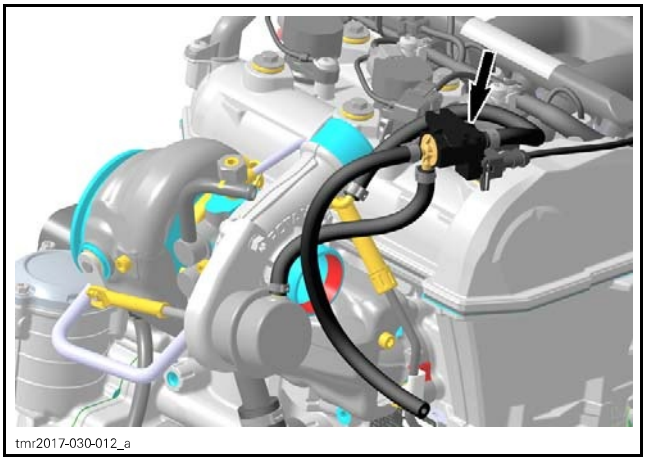
tmr2017-030-012_a

TCV

TCV Access

The TCV is located above the turbocharger's compressor.

Remove the bulkhead service cover.

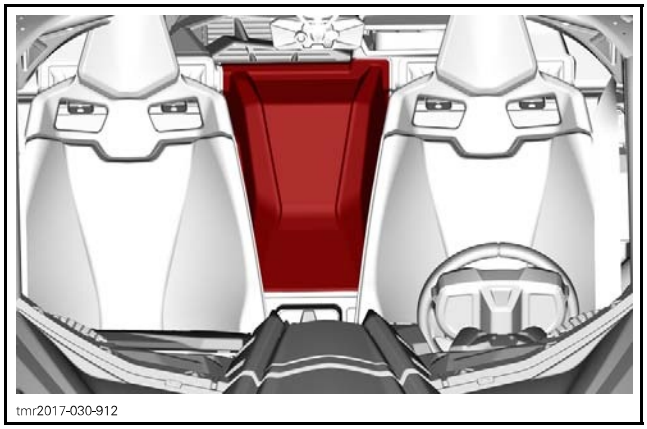
tmr2017-030-912

TCV Troubleshooting

REQUIRED TOOL	
ECM ADAPTER TOOL (P/N 529 036 166)	
FLUKE 115 MULTIMETER (P/N 529 035 868)	

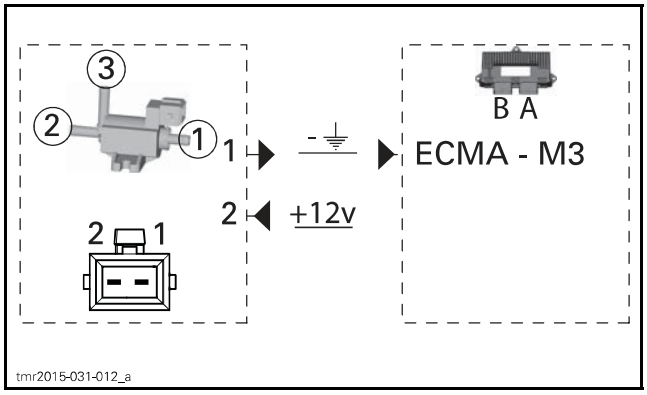

tmr2015-031-012_a

Replace TCV if it will not maintain pressure (leakage) or if flow is restricted.

Leakage

Plug port **no. 3**.

Apply 80 kPa ± 0.5 kPa (11.6 PSI ± .07 PSI) of pressure to port **no. 2**.

The TCV should maintain pressure for a minimum of 10 seconds.

Flow

Apply 12v to pin 2 and ground pin 1.

Air should flow freely from port **no. 2** to ports **no. 1** and **no. 3**.

TCV Specifications

SPECIFICATION	
TCV resistance	23 ± 2 Ω

Replacing the TCV

Replace all Oetiker clamps.

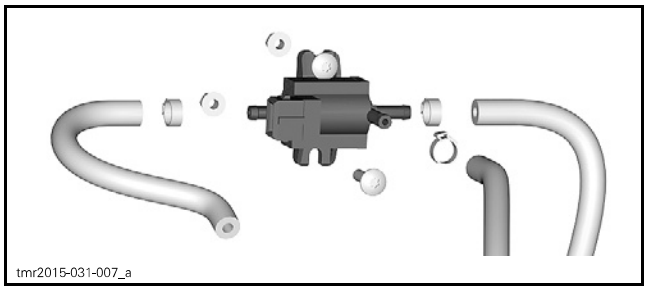

Ensure proper hose routing.

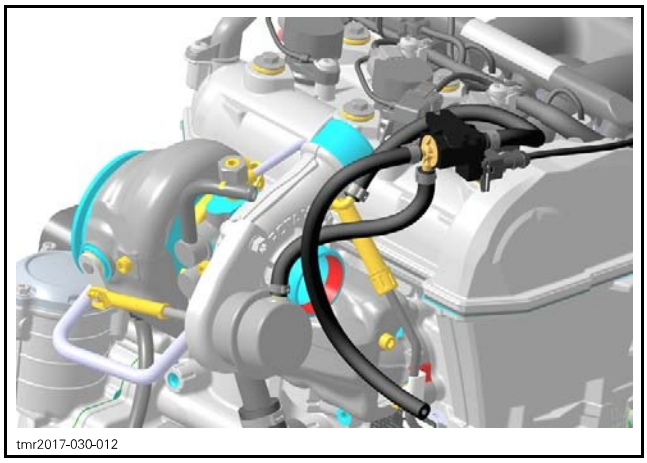

TIGHTENING TORQUE	
TCV retaining screws	5 N•m ± 0.5 N•m (44 lbf•**in** ± 4 lbf•**in**)

KNOCK SENSOR (KS)

This engine is equipped with one knock sensor (KS) that measures the amount of noise generated by the engine.

If an abnormally high amount of noise is measured, the ECM perceives this as a KNOCK condition and adjusts ignition timing by retarding it to correct the situation.

Knock Sensor Location

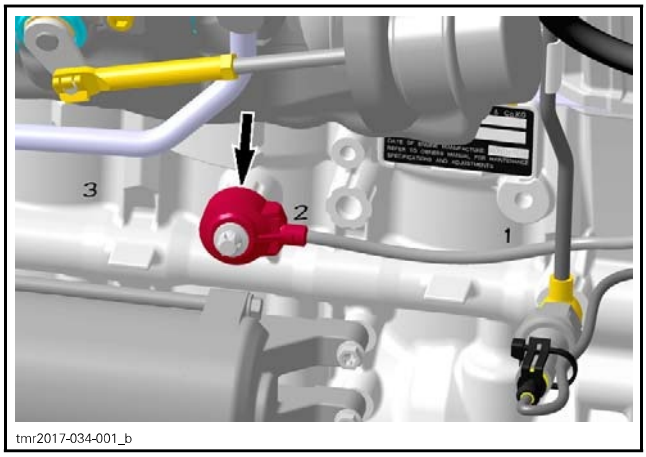

ENGINE - EXHAUST SIDE

Knock Sensor and Connector Location

Remove the bulkhead service cover to have access to the knock sensor.

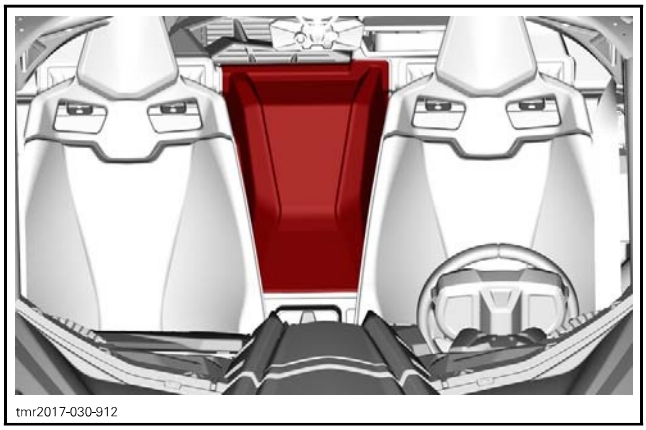

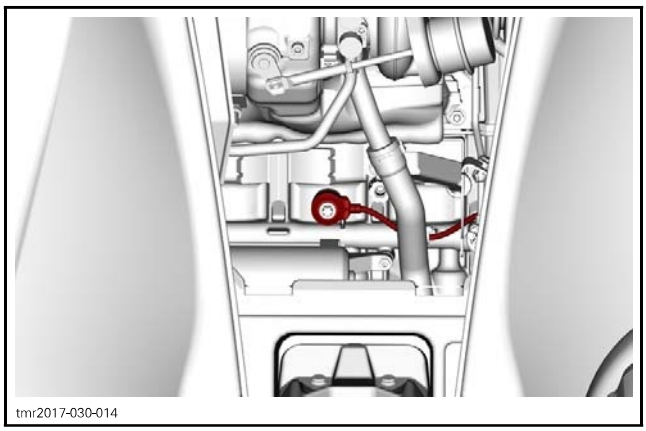

CVT DUCT REMOVED FOR CLARITY

The KS connector is located under the throttle body, behind the CVT ducts on the left side.

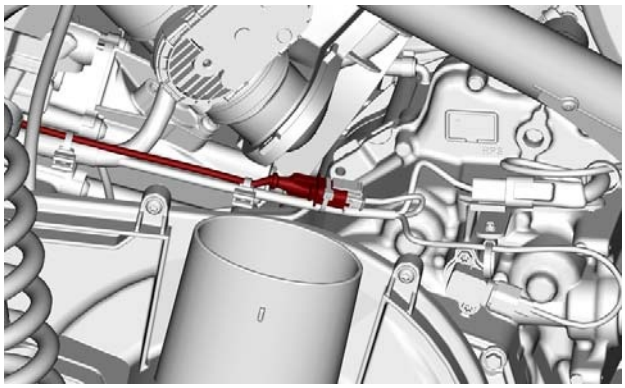
tmr2017-030-013

Knock Sensor Troubleshooting

Always use BUDS2 to check for a knock sensor related fault code and carry out service actions.

Knock sensor problems may be related to, but not limited to any of the following items:

– Loose or improperly torqued knock sensor
– Dirty or corroded mounting surface
– Cracked knock sensor from over torquing
– Bad wiring and connections
– An induced knock (or vibration) due to a loose part external to the engine.

Testing the Knock Sensor (KS)

Testing KS Operation (Dynamic Test)

1. Using BUDS2 to check for a knock sensor fault. If an occurred fault is present, reset the fault.
2. Disconnect vehicle from BUDS2 and make vehicle ready for a test ride.
3. During test ride, perform several accelerations under load and ensure engine RPM exceeds 4000 RPM.
4. After test ride, reconnect vehicle to BUDS2 and look for a knock sensor fault code.

If no fault code occurs, the knock sensor is good.

If a fault occurs, do the following:

– Refer to *KNOCK SENSOR TROUBLESHOOTING* and check for any of the problems listed. Repair as required.
– Carry out a knock sensor resistance test.

Testing the KS Resistance at the ECM

1. Disconnect ECM-A connector and install it on the ECM adapter tool.
2. Set multimeter to "Ω", measure the knock sensor circuit resistance as per following table.

REQUIRED TOOLS	
FLUKE 115 MULTIMETER (P/N 529 035 868)	ECM ADAPTER TOOL (P/N 529 036 166)
	

ECM ADAPTER			MEASUREMENT
SENSOR	PINS		RESISTANCE Ω @ 20°C (68°F)
KS	C3	G2	5 MΩ

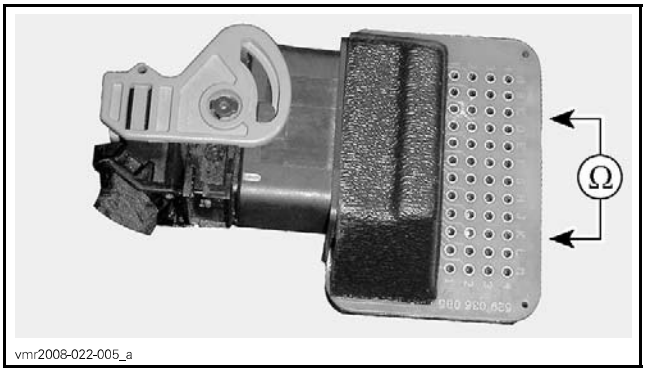

vmr2008-022-005_a

If knock sensor circuit resistance is as specified, wiring harness and sensor are good.

If resistance measured at ECM connector is not close to specification, refer to *TESTING THE KS RESISTANCE AT THE COMPONENT CONNECTOR*.

Testing the KS Resistance at the Component Connector

1. Remove the required parts to access the knock sensor connector.
2. Disconnect the knock sensor connector.
3. Using a multimeter, measure the resistance between both terminals on the knock sensor and compare the measurement with the preceding table.

If resistance is not as specified, replace knock sensor.

If resistance is good at the knock sensor, carry out a continuity check of the wiring between the knock sensor connector and ECM connector "A". Refer to applicable *WIRING DIAGRAM* for details.

NOTE: Although the knock sensor resistance is as specified, it may still be at fault as it may not be producing a signal within its design specification.

Repair or replace wiring and connectors between the ECM and knock sensor.

Replacing the KS

1. Remove rear CVT duct.
2. Disconnect KS sensor connector.
3. Cut locking ties and remove clamp securing wire harness.
4. Remove the bulkhead service cover
5. Remove knock sensor mounting screw.
6. Clean knock sensor contact surface on cylinder. Also clean threaded hole.
7. Install new knock sensor and tighten as specified.

TIGHTENING TORQUE	
Service product	LOCTITE 243 (BLUE) (P/N 293 800 060)
Knock sensor screw	23 N•m ± 3 N•m (17 lbf•ft ± 2 lbf•ft)

NOTICE **Improper torque may prevent sensor from functioning properly and lead to severe damage of internal engine components.**

8. Ensure knock sensor connector is clean and corrosion free before connecting it.
9. Install new locking ties as per factory specification.

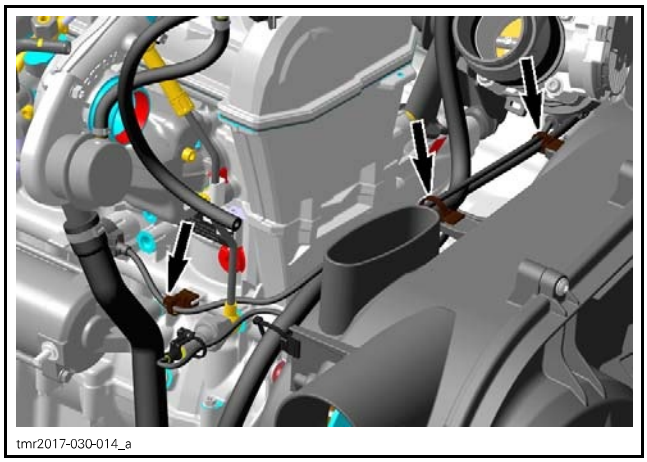
tmr2017-030-014_a

LOCKING TIES

10. Reinstall all remaining removed parts.
11. Install harness clamp and tighten to specification.

TIGHTENING TORQUE	
Harness clamp screw	11 N•m to 1 N•m (97 lbf•**in** to 9 lbf•**in**)

HEATED OXYGEN SENSOR (HO_2S)

Oxygen Sensor Location

This vehicle is equipped with 1 heated oxygen sensors (HO_2S): located on the exhaust pipe, near the turbo.

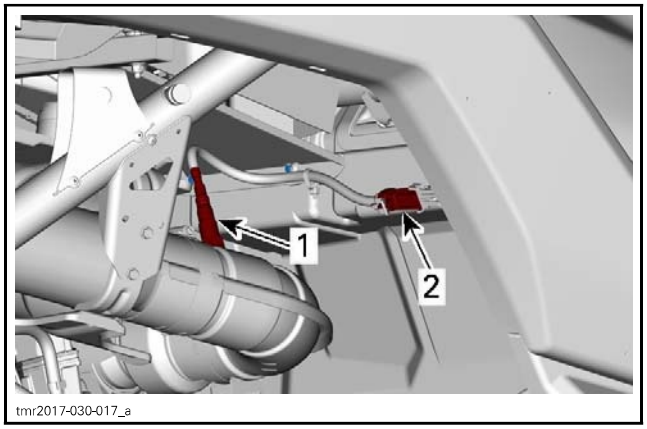

tmr2017-030-017_a

RIGHT SHOCK ABSORBER REMOVED FOR CLARITY
1. *Oxygen sensor*
2. *Connector*

Oxygen Sensor and Connector Access

The oxygen sensor and its connector are accessible behind the right rear shock absorber.

Oxygen Sensor General Precautions

Take the following precautions to avoid sensor malfunction:

- Do not use any product on sensor probe.
- Do not expose sensor to water, oil, windshield cleaner, anticorrosion oil, grease, terminal cleaner, etc.
- Do not drop or use an oxygen sensor that has been dropped.
- Do not use any compound on sensor threads unless labeled as compatible with oxygen sensor.
- Do not use impact wrench or conventional socket type wrench to install sensor.
- Do not allow sensor or wire to touch exhaust system or any other hot component.
- Do not route sensor wires to create tension in the wires. This could cause faults or sensor malfunction.

Oxygen Sensor Troubleshooting

Always use BUDS2 to check for fault codes. Carry out service actions.

In BUDS2, when checking oxygen sensor voltage, refer to the following table.

OXYGEN SENSOR VOLTAGE IN BUDS2	
VOLTAGE READING	CONDITION
Varies 0.1 to 0.8 Volts	Normal oxygen sensor operation in closed loop
Constant 0.45 Volts	Oxygen sensor circuit open
Constant low voltage	Indicates fuel mixture too lean, possible oxygen sensor fault, possible fuel system fault, possible air leak
Constant high voltage	Indicates fuel mixture too rich, possible fuel system fault

Testing the Oxygen Sensor

Testing the Oxygen Sensor Using BUDS2

1. Click on **Measurements** tab, then on **ECM** tab.
2. Start engine.
3. Observe the **O_2 sensor V** and **Oxygen Sensor Status** indications.

If a fault code related to an oxygen sensor is active, the oxygen sensor indicator will **not** turn on. The fault code(s) need(s) to be solved first.

When a properly functioning oxygen sensor circuit is first initiated, the oxygen sensor heats up and the ECM is operating in a closed loop control mode. The status of the oxygen sensor circuit will change from "Init" to "Active" as it progresses through a series of steps. These steps may be viewed on the **Measurements** page of BUDS2 in the **Oxygen Sensor Status** window.

NOTE: The steps listed in the following sensor status table may not all be displayed, and may vary from one time to the next. The steps displayed will depend on the engine operating status and oxygen sensor operating status.

LIST OF OXYGEN SENSOR STATUS INDICATIONS
Init
Heating Active
Control Active
Error

When the oxygen sensor reaches the "Active" state, it becomes operational and its indicator will turn on in BUDS2.

NOTE: At room temperature (approximately 21°C (70°F)), the engine needs to run for approximately 15 seconds before the oxygen sensor becomes **CONTROL ACTIVE** and its indicator light turns on in BUDS2.

If a sensor status does not change or does not reach the **CONTROL ACTIVE** state, or the oxygen sensor indicator light does not come on, try a new oxygen sensor.

NOTE: Before replacing a sensor, check wiring, terminals and sensor condition.

Testing for Oxygen Sensor Input Voltage

NOTE: This test validates the heater element circuit.

1. Ensure main power relay (R2) is installed and the F5 fuse is not burnt.
2. Disconnect the oxygen sensor connector.
3. Install key on D.E.S.S. post and press the START/STOP button.
4. Using a multimeter set to Vdc, read the input voltage provided to the sensor heater.

REQUIRED TOOLS	
FLUKE 115 MULTIMETER (P/N 529 035 868)	

OXYGEN SENSOR CONNECTOR (HARNESS SIDE)		MEASUREMENT
PIN		
C	Battery ground	Battery voltage

If Input voltage is good, refer to *TESTING THE RESISTANCE OF THE OXYGEN SENSOR HEATER* and *TESTING FOR OXYGEN SENSOR CIRCUIT CONTINUITY*.

If input voltage is not good, test the continuity of the power circuit from fuse F4 in fuse box 1. Refer to the applicable *WIRING DIAGRAM* for details.

If input voltage wire continuity is at fault, repair or replace wiring or connector.

Testing the Resistance of the Oxygen Sensor Heater

Test the resistance value of the oxygen sensor between the sensor pins as follows.

OXYGEN SENSOR PIN		RESISTANCE @ 20°C (68°F)
C	D	Approximately 7 - 11 Ω

If reading is **not** within specification, replace the oxygen sensor.

Testing for Oxygen Sensor Circuit Continuity

NOTE: This test validates the heater element circuit and the sensor circuits.

1. Remove main power relay (R2) in fuse box 1. Refer to *POWER DISTRIBUTION AND GROUNDS* subsection.
2. Disconnect ECM-B connector and install it on the ECM adapter tool. Refer to *ECM CONNECTOR ACCESS* in *ENGINE CONTROL MODULE (ECM)* in this subsection.
3. Using a multimeter set to "Ω", test for continuity between the oxygen sensor harness connector and the ECM adaptor as per following tables.

REQUIRED TOOLS	
FLUKE 115 MULTIMETER (P/N 529 035 868)	ECM ADAPTER TOOL (P/N 529 036 166)
	

OXYGEN SENSOR CIRCUIT CONTINUITY TEST		
OXYGEN SENSOR PIN	ECM CONNECTOR "B"	RESISTANCE @ 20°C (68°F)
A	J1	Close to 0 Ω
B	D2	
D	L2	

If a resistance value is NOT as specified, repair or replace the wiring and connectors.

Replacing the Oxygen Sensor

1. Remove main power relay (R2) in fuse box 1. Refer to *POWER DISTRIBUTION AND GROUNDS* subsection.

⚠ CAUTION Exhaust system and oxygen sensor may be hot. To avoid possible injury, allow exhaust system components time to cool before proceeding.

2. Disconnect oxygen sensor connector.
3. Cut locking tie securing oxygen sensor harness.
4. Unscrew oxygen sensor from exhaust pipe.

NOTICE Handle oxygen sensor with clean hands. Oxygen sensor probe must remain free of oil, grease, antiseize lubricant and any other foreign matter that could affect its operation.

If a new oxygen sensor is installed, its threads are already coated with an antiseize product. Sensor is ready for installation.

If the same oxygen sensor is installed, apply LOCTITE 767 (ANTISEIZE LUBRICANT) (P/N 293 800 070) on its **first two threads**. If not available, always use a product that is oxygen sensor safe.

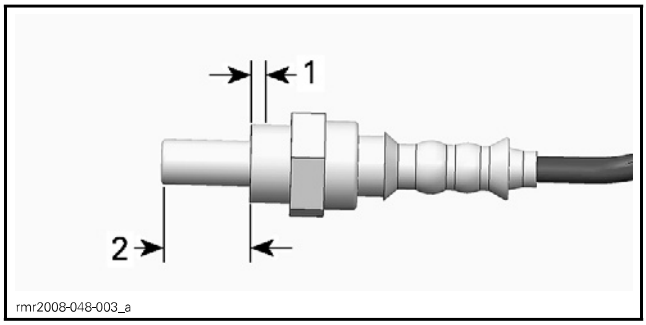

TYPICAL
1. Apply antiseize lubricant first two threads
2. Must be free of any product

NOTICE Do not apply any antiseize lubricant to the sensor probe as it could affect its operation.

5. Screw sensor in exhaust pipe.

TIGHTENING TORQUE	
Oxygen sensor	50 N•m ± 10 N•m (37 lbf•ft ± 7 lbf•ft) + LOCTITE 767 (ANTISEIZE LUBRICANT) (P/N 293 800 070)

6. Connect the electrical connector.
7. Reinstall the main relay (R2).

FUEL TANK AND FUEL PUMP

SERVICE TOOLS

Description	Part Number	Page
ECM ADAPTER TOOL	529 036 166	11
FUEL HOSE ADAPTER	529 036 023	5
OETIKER PLIER	295 000 070	8
PRESSURE GAUGE	529 035 709	5
VACUUM/PRESSURE PUMP	529 021 800	4, 14

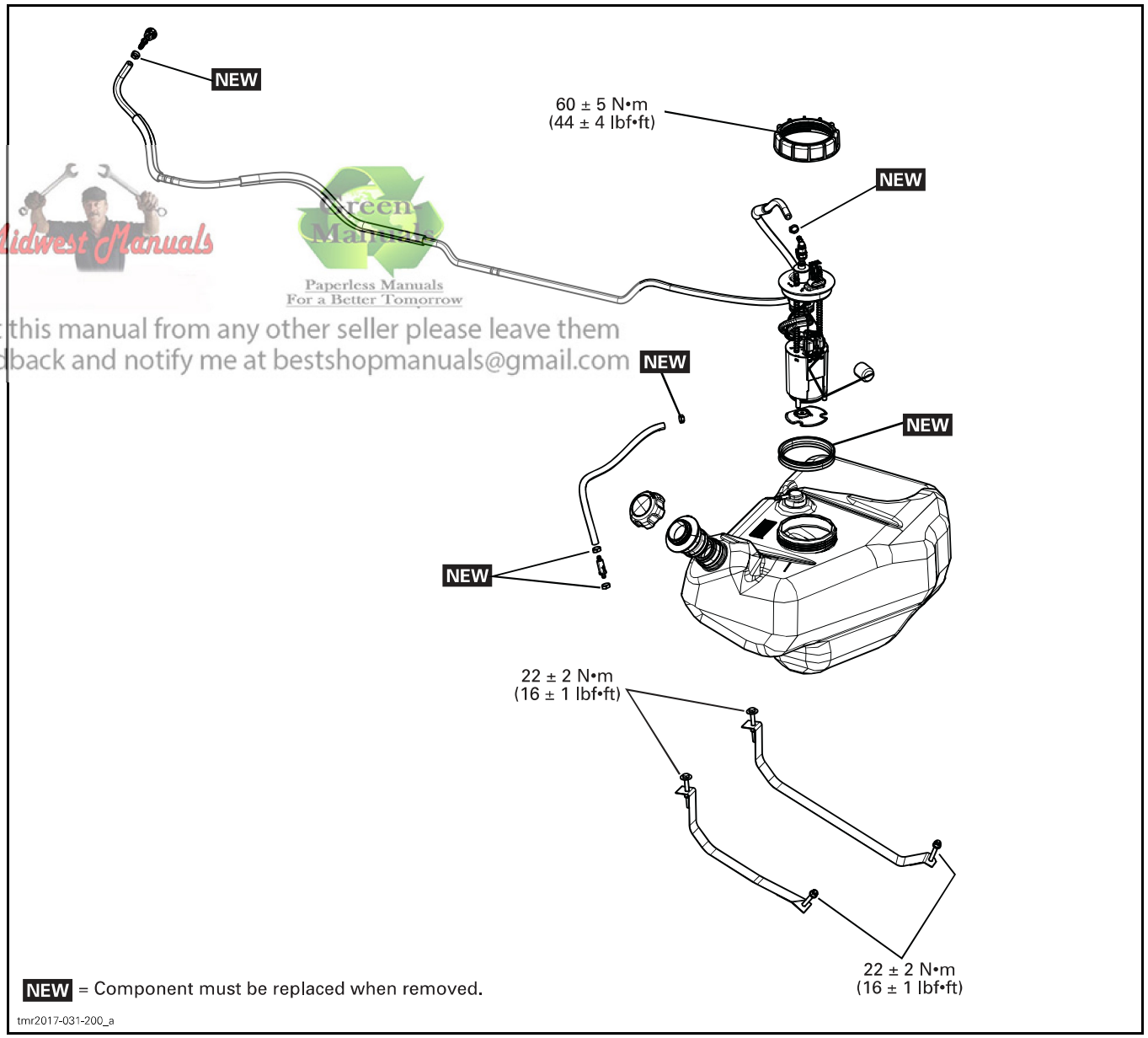

Midwest Manuals
Green Manuals
Paperless Manuals
For a Better Tomorrow
If you bought this manual from any other seller please leave them
NEGATIVE feedback and notify me at bestshopmanuals@gmail.com

GENERAL

⚠ WARNING

Fuel is flammable and explosive under certain conditions. Ensure work area is well ventilated. Do not smoke or allow open flames or sparks in the vicinity.

⚠ WARNING

Always disconnect battery prior to working on the fuel system.

⚠ WARNING

Do not allow fuel to spill on hot engine parts and/or on electrical connectors.

When the repair is completed, ensure that all hoses are connected and secured. Perform the *FUEL PRESSURE TEST* and the *FUEL TANK LEAK TEST* as explained in this subsection.

Fuel lines remain under pressure at all times. Proceed with care when removing/installing high pressure test equipment.

Use the appropriate diagnostic software or disconnect the fuel pump electrical connector to disable fuel pump and crank engine to release fuel pressure prior to disconnecting any fuel hose.

Cover the fuel hose connections with an absorbent shop rag and carefully disconnect them to minimize spilling.

SYSTEM DESCRIPTION

Fuel Tank Vent System

The fuel tank is equipped with a vent system that ensures the fuel tank remains at ambient pressure.

Air can enter and exit the fuel tank at all times through the fuel tank vent valve. This prevents negative pressure within the fuel tank which could cause fuel starvation.

The vent valve also prevents fuel from flowing out through the inlet of the vent system should the vehicle be overturned.

Fuel Tank Vent Breather Filter

The air inlet hose of the vent system is equipped with an in-line breather filter that prevents entry of particles such as dust or small insects.

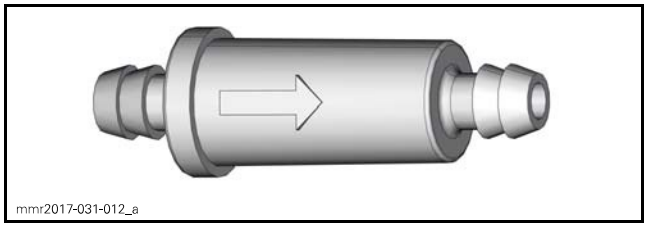

mmr2017-031-012_a

The arrow points towards the vent valve.

Fuel Pump Module

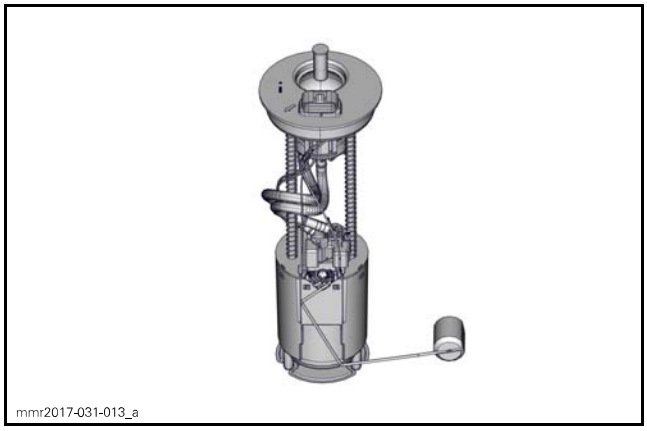

mmr2017-031-013_a

The fuel pump module is inserted in the fuel tank. It provides fuel delivery for the EFI system and encompasses the following components.

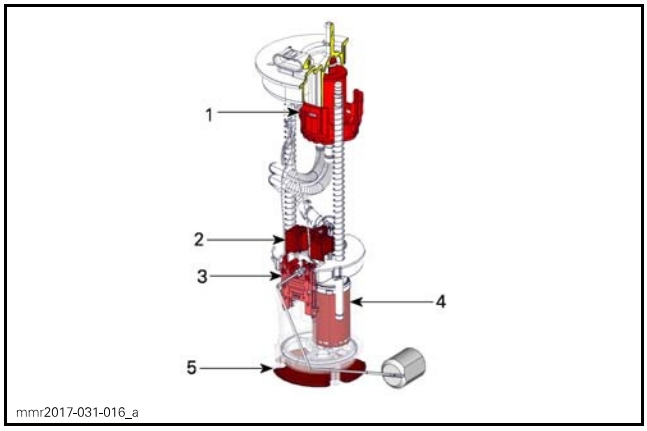

mmr2017-031-016_a

FUEL PUMP MODULE COMPONENTS
1. *Upper outlet filter*
2. *Fuel pressure regulator*
3. *Float type fuel level sensor*
4. *Fuel pump*
5. *Lower inlet filter*

Fuel Pump Operation

When the pump is in operation, it draws fuel into the reservoir through a lower inlet filter and a disk type valve.

The pressurized fuel is pushed through an upper outlet filter to the fuel rail.

Excess fuel pressure generated by the pump is routed from the upper outlet filter back to the pump canister reservoir by a pressure regulator mounted on the pump reservoir cover.

When the START button is pressed, the electrical system is powered. The fuel pump will come on momentarily to pressurize the fuel rail in preparation for the engine start.

The ECM supplies the ground (power control signal) to turn on the fuel pump motor.

The pressure regulator will ensure appropriate fuel pressure is supplied to the injectors.

When the ECM receives a signal to shut down the engine it removes the fuel pump ground signal.

Fuel Level Indication

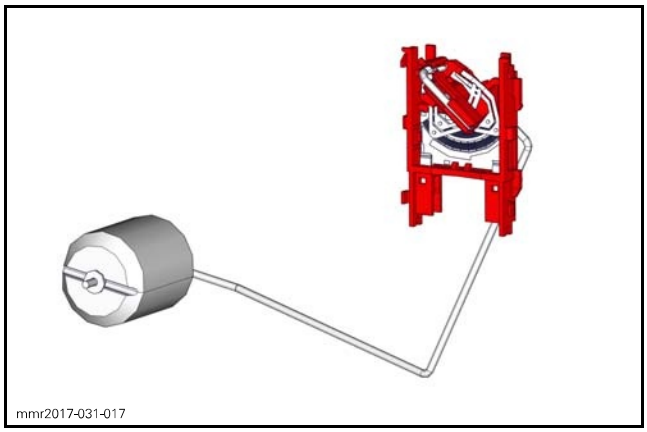

An electric float type fuel level sensor is mounted on the side of the fuel pump reservoir. As the float moves with changing fuel levels, it varies in resistance. This signal is representative of the fuel level.

The fuel level sensor resistance is at its lowest value when the fuel tank is full, and at its highest value when the tank is empty.

Refer to the *FUEL LEVEL SENSOR* in this subsection for fuel level sensor testing procedures.

Fuel Filters

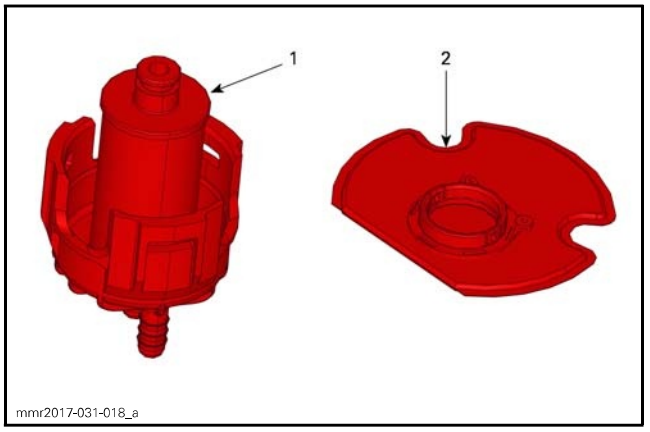

FUEL FILTERS
1. *Upper outlet filter*
2. *Lower inlet filter*

The system comprises two levels of filtration.

A lower inlet filter (prefilter) attached to the bottom of the pump, and a upper outlet filter that is integral to the fuel pump module.

Fuel Pump Pressure Regulator

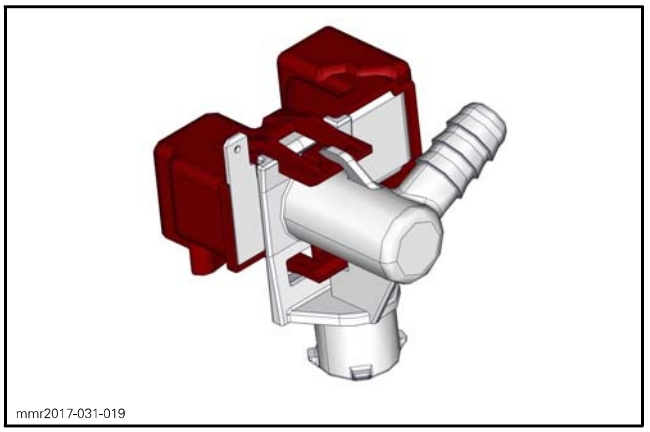

The fuel pressure regulator is integral to the fuel pump module. The pressure regulator maintains proper fuel pressure for the EFI system.

INSPECTION

FUEL TANK LEAK TEST

⚠ WARNING

Always carry out a fuel tank leak test whenever the fuel tank shows signs of wear or damage which may cause a leak, or when the fuel pump has been removed or replaced, or if you suspect a leak. If the fuel tank is damaged, the fuel tank should be replaced even if no leak is present. Do not attempt to repair the fuel tank.

1. Refill fuel tank and ensure fuel tank cap is in good condition and properly installed.
2. Remove the right side dashboard

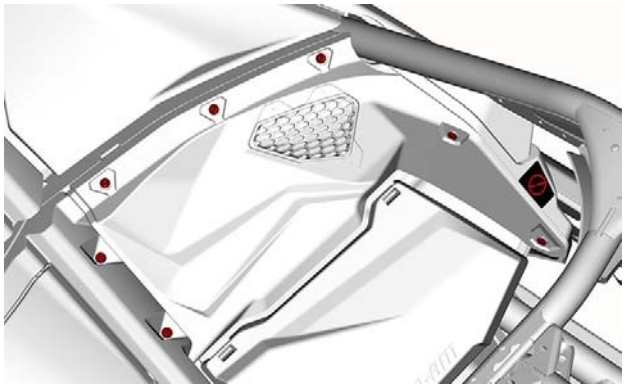

tmr2017-031-001

3. Remove the vent hose from the fuel tank vent valve.
4. Using the VACUUM/PRESSURE PUMP (P/N 529 021 800) and a short piece of hose, pressurize the fuel tank through the vent valve.



tmr2017-031-010

PRESSURE	TIME WITHOUT PRESSURE DROP
14 kPa (2 PSI)	3 minutes

If pressure drops, locate fuel leak(s) and repair or replace leaking component(s).

NOTE: In case of fuel tank leak, do not attempt repair. Fuel tank must be replaced.

To locate a leak, check for a fuel smell or leaking fuel.

To ease locating leak(s), spray soapy water on all hose connections and components; bubbles will indicate the leak location(s).

FUEL PUMP PRESSURE TEST

The pressure test will show the available pressure at the fuel pump outlet. It validates the pressure regulator, the fuel pump and tests for leaks in the system.

NOTE: Refer to the *FUEL SYSTEM DIAGNOSTIC FLOW CHART* to help diagnose a fuel system related problem.

1. Ensure there are no leaks from hoses and fittings. Repair any leak.
2. Ensure the fuel level in the tank is sufficient.
3. Before proceeding with the pressure test ensure the battery is fully charged. Battery voltage must be over 12 volts.
4. Connect vehicle to BUDS2 software and select the following:
   - **Functions** button
   - Select: **Execute Fuel Pressure Relief**
5. Remove the right side dashboard.

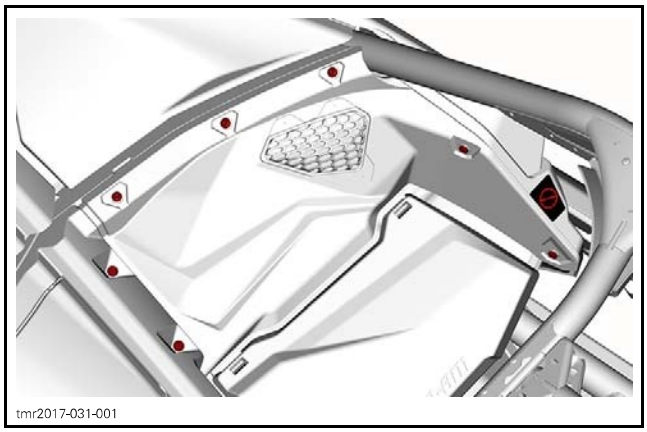

tmr2017-031-001

6. Remove the connector cover

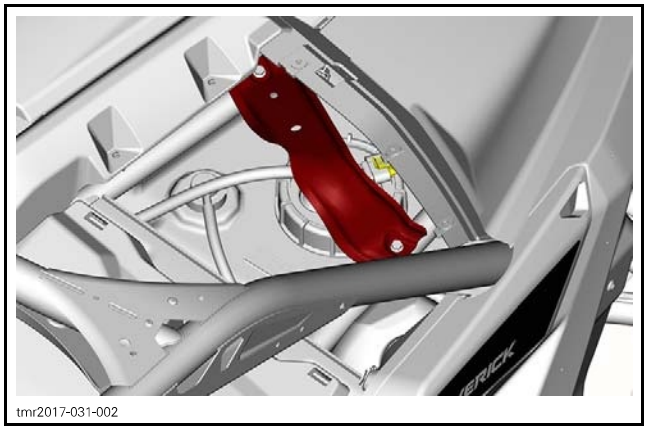
tmr2017-031-002

7. Carefully disconnect the fuel pump outlet hose by pressing on the release tab of the quick disconnect fitting.
8. Install fuel PRESSURE GAUGE (P/N 529 035 709) and FUEL HOSE ADAPTER (P/N 529 036 023) between disconnected hose and fuel rail (in-line installation).


529035709

PRESSURE GAUGE

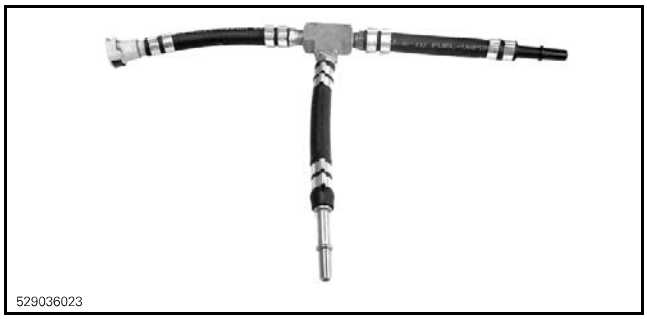
529036023

T-FITTING

9. Using BUDS2, reactivate fuel pump by selecting **Activate Fuel Pump**.

FUEL PRESSURE	400 kPa ± 14 kPa (58.02 PSI ± 2.03 PSI)

NOTE: Valid at 12 V ± 0.1 V.

10. Start engine and observe fuel pressure.
11. Stop engine.
12. In BUDS2, do a fuel pressure relief.
13. Remove tool and connect hose on fuel rail.

Test Conclusion

The fuel pressure should be within specification in static or dynamic tests.

A rapid pressure drop after the engine is stopped indicates leakage either from a fuel hose, fuel rail, or from the fuel pump check valve.

– Check fuel hoses, fuel rail and fittings for leaks. If not leaking, replace fuel pump.

A slow pressure drop after the engine is stopped indicates leakage either from a fuel injector or from the fuel pressure regulator.

– Check fuel injectors for leaks. If not leaking, replace fuel pump.

TROUBLESHOOTING

FUEL SYSTEM DIAGNOSTIC FLOW CHART

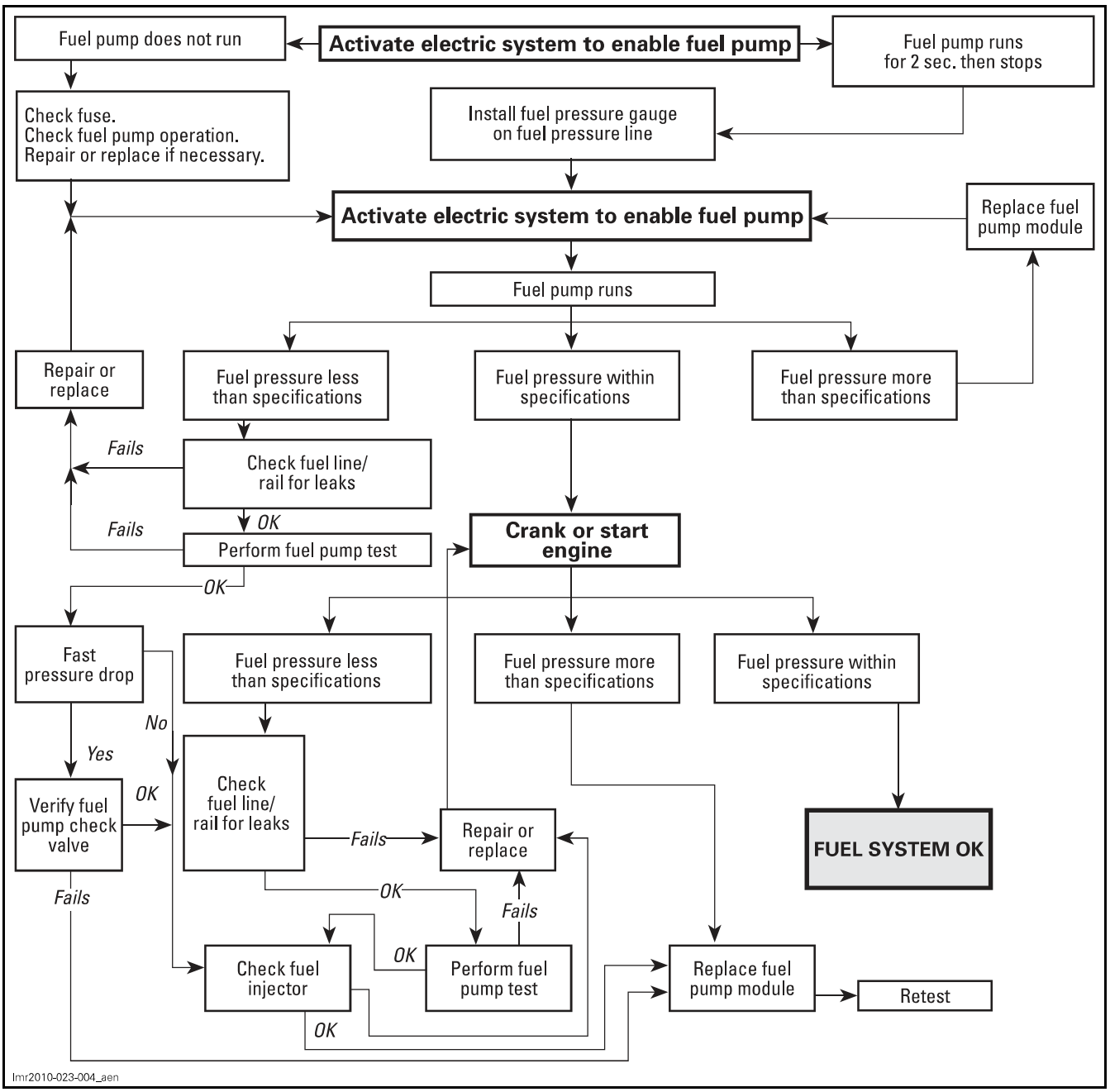

PROCEDURES

FUEL HOSE AND OETIKER CLAMPS

Replacing Fuel Hose

When replacing fuel hoses, be sure to use hoses and clamps as available from BRP parts department. This will ensure continued proper and safe operation.

⚠ WARNING

Use of fuel lines other than those recommended by BRP may compromise fuel system integrity.

⚠ WARNING

Whenever removing a hose in the fuel system, always use new Oetiker clamps at assembly. Then validate fuel system tightness by performing a fuel pressure test.

When reinstalling fuel hoses, pay attention to the following important points.

Fuel Tank Area:

– Make sure corrugated hose installed over the front fuel hose is retained by at least 2 locking ties.
– Locking ties must be installed at each end of the corrugated hose and must be tight just enough to avoid hose from moving.

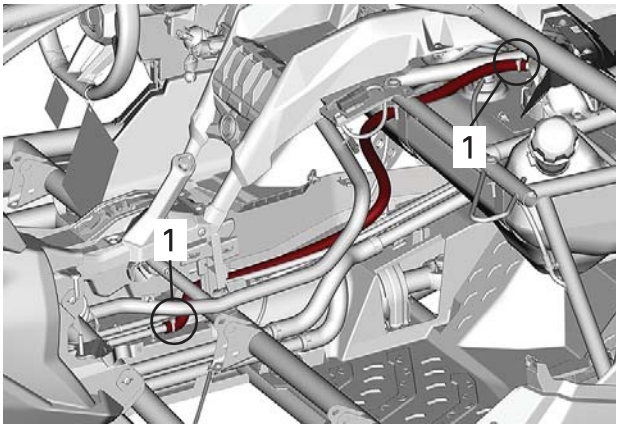

1. Locking tie position

Along the Console:

– Install the locking ties between location marks indicated on the fuel hose.

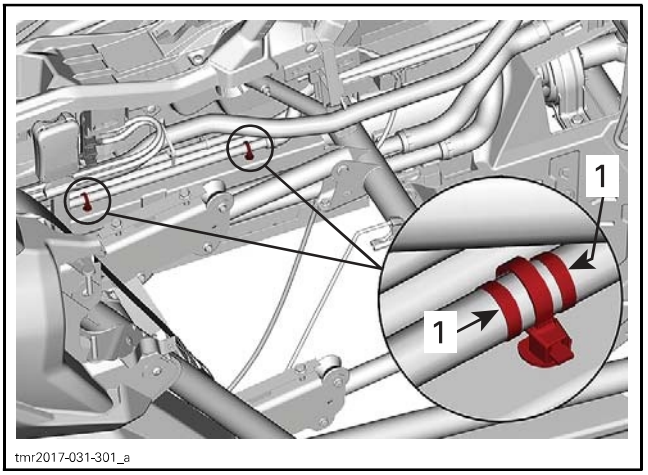

1. Location marks on fuel hose

Engine Area (Hose Support - From Fuel Tank):

– Secure the corrugated hose over the fuel hose with a locking tie. Tight just enough to avoid corrugated hose movements.
– Secure fuel hose and the corrugated hose to support with another locking tie.

.

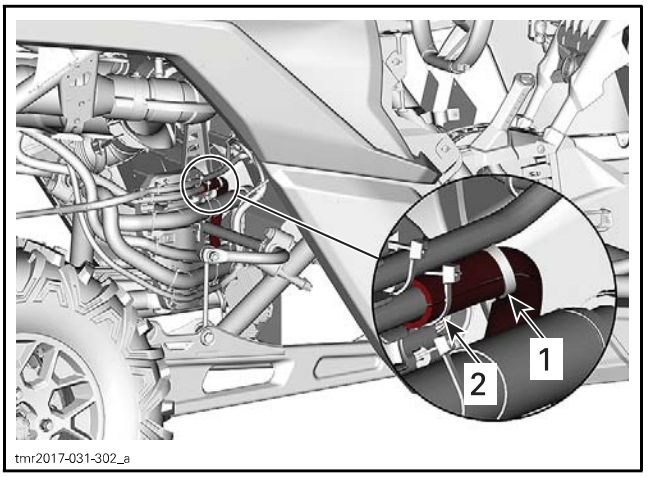

1. Locking tie securing corrugated hose over fuel hose
2. Locking tie securing fuel hose on support

Engine Area (Hose Support - Toward Engine):

– Secure the corrugated hose over the fuel hose with a locking tie. Tight just enough to avoid corrugated hose movements.
– Attach fuel hose and thermostat inlet hose together.

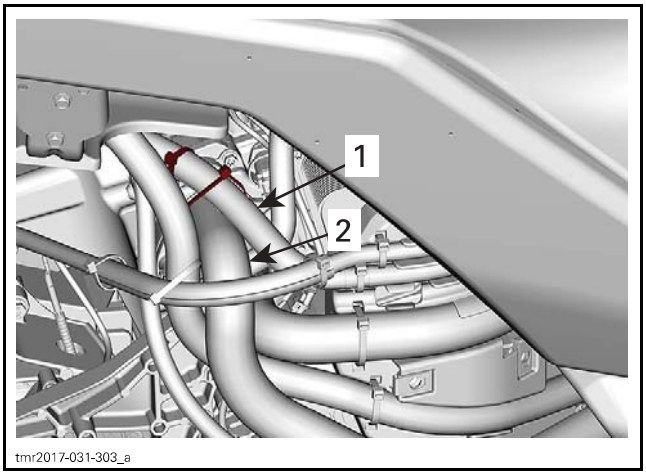

1. *Fuel hose*
2. *Thermostat inlet hose*

– To retain the fuel hose on the rear portion of the support, install a locking tie between location marks indicated on the fuel hose.

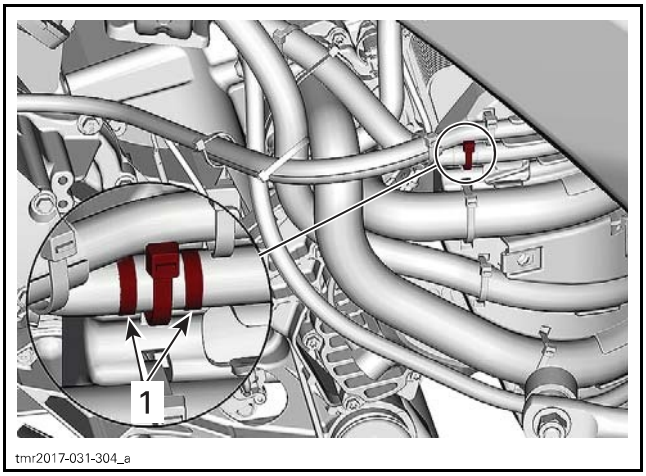

1. *Location marks on fuel hose*

Replacing Oetiker Clamp

To secure or cut Oetiker clamps on fuel lines, use OETIKER PLIER (P/N 295 000 070).

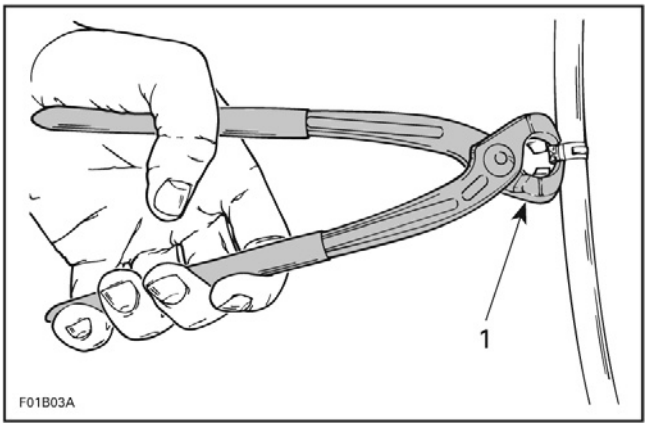

1. *Cutting clamp*

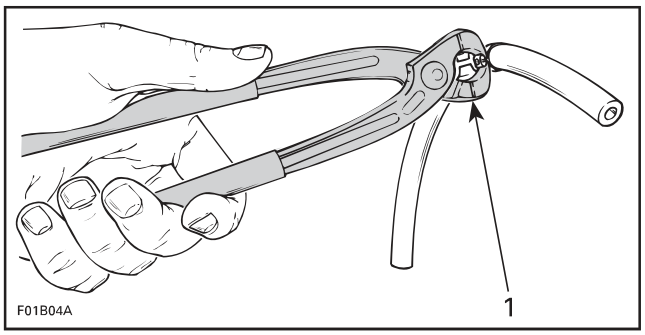

1. *Securing clamp*

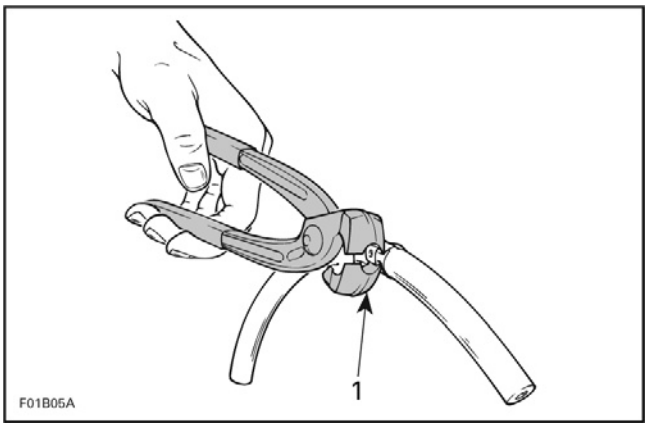

1. *Securing clamp in limited access*

FUEL TANK

Draining the Fuel Tank

Remove fuel tank cap and siphon gas into an approved fuel container.

Removing the Fuel Tank

1. Drain fuel tank. Refer to *DRAINING THE FUEL TANK* above in this subsection.
2. Connect the vehicle toBUDS2 and select the following:
   – **Functions** button
   – Select: **Execute Fuel Pressure Relief**
3. Disconnect battery, refer to *CHARGING SYSTEM* subsection.
4. Remove right dashboard.

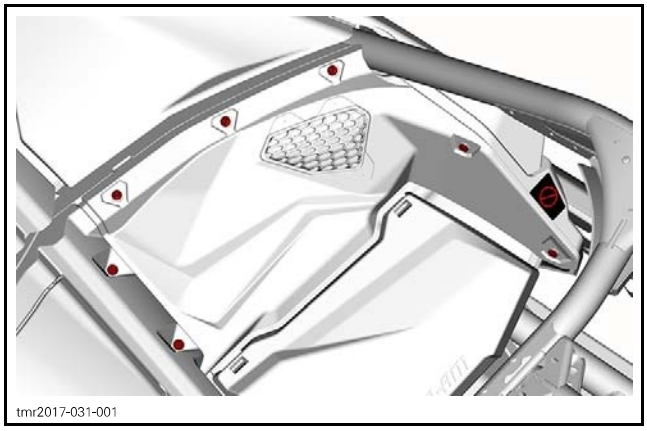
tmr2017-031-001

5. Remove connector cover.

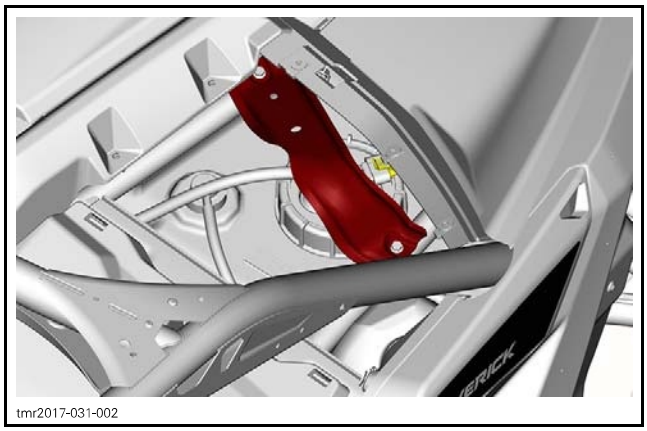
tmr2017-031-002

6. Remove lower dashboard.

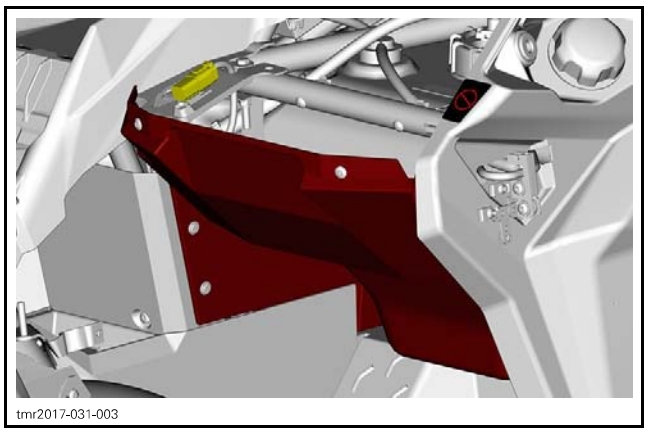
tmr2017-031-003

7. Remove glove box.

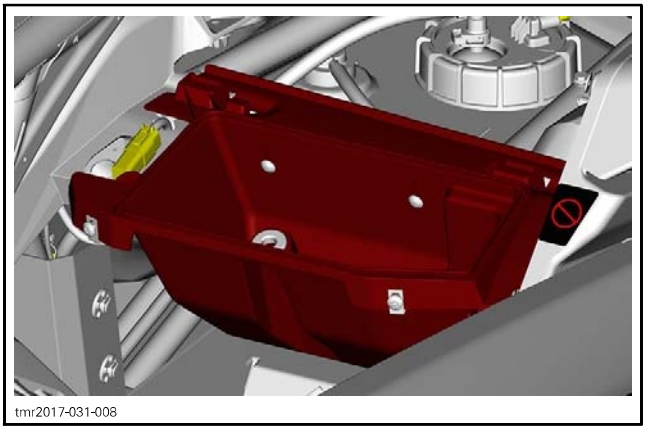
tmr2017-031-008

8. Disconnect the fuel pump connector.
9. Remove the vent hose from the fuel tank valve.
10. Disconnect the high pressure fuel hose.

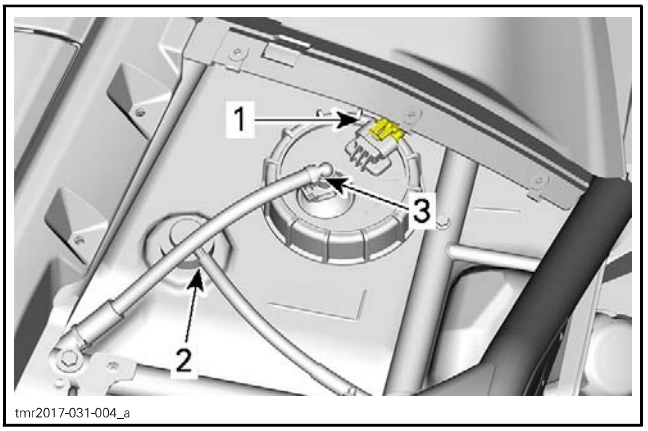

tmr2017-031-004_a

1. *Fuel pump connector*
2. *Vent hose*
3. *High pressure fuel hose*

11. Loosen both fuel filler neck clamps.

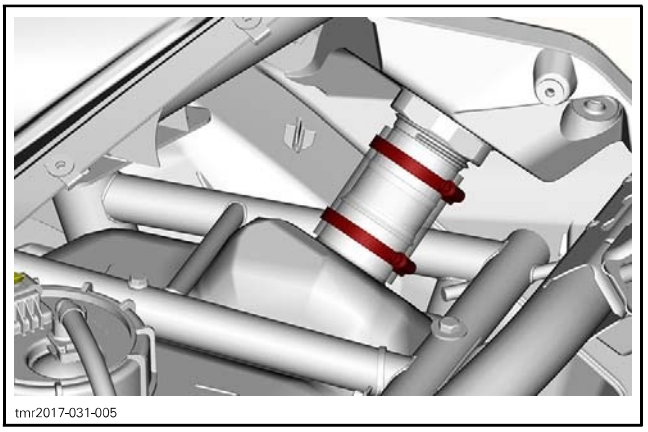
tmr2017-031-005

12. Remove fuel tank retaining straps.

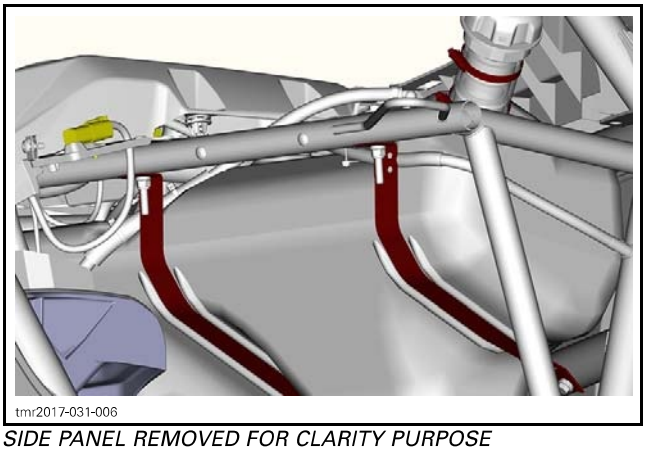

SIDE PANEL REMOVED FOR CLARITY PURPOSE

13. Pull fuel tank out of vehicle.

Inspecting the Fuel Tank

Inspect fuel tank for any damages or cracks which may result in fuel leaks.

Inspect tank and protector attachment points for damages.

Inspect protector for damages.

If cracks, gouges or other damages which may lead to a fuel leak, or damages to attachment points that could prevent the tank from being secure are found, replace fuel tank.

Installing the Fuel Tank

The installation is the reverse of the removal procedure. However, pay attention to the following.

NOTE: Inspect fuel tank retaining straps for damage, deformation or cracks. Replace as needed.

Be sure to properly connect and route:
- Fuel tank vent tube
- Fuel pump pressure hose
- Electrical connector.

Refill fuel tank and ensure there are no leaks by performing a *FUEL TANK LEAK TEST* and a *FUEL PRESSURE TEST* as described in this subsection.

FUEL PUMP

Fuel Pump Pressure Test

Refer to *INSPECTION* in this subsection.

Fuel Pump Quick Test

1. Turn ignition key to ON.
2. Listen for fuel pump operation.
3. Fuel pump should come ON for a few seconds, then stop.

If fuel pump does operate as in previous steps, carry out the following:
- Check fuel pump fuse.
- Check in BUDS2 for applicable fault codes. Refer to *COMMUNICATION TOOLS* subsection.
- Carry out a fuel pump input voltage test.

Testing Fuel Pump Input Voltage

Turn ignition key ON.

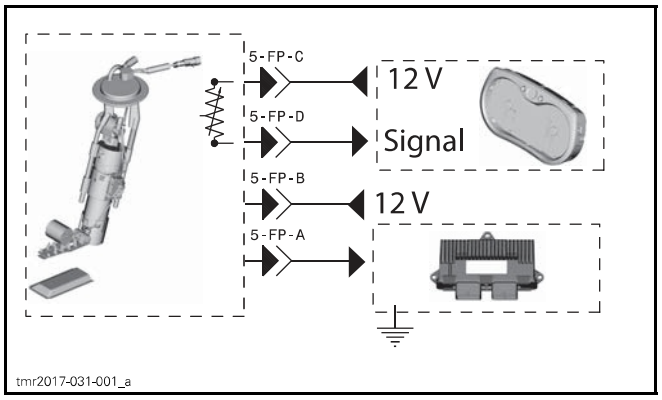

FUEL PUMP INPUT VOLTAGE TEST		
FUEL PUMP CONNECTOR		VOLTAGE READING
Pin A	Pin B	Battery voltage

If battery voltage is read, carry out a fuel pump resistance test.

If battery voltage is not read, test fuel pump power input as follows.

FUEL PUMP POWER WIRE TEST		
TEST PROBES		VOLTAGE READING
Fuel pump connector Pin B	Battery ground	Battery voltage

If battery voltage is now read, check fuel pump ground circuit between fuel pump connector FP-A and ECM connector B-M1.

If battery voltage is still not read, check fuel pump:
- Fuse (F5)
- Power circuit
- Wiring and connectors.

Testing Fuel Pump Resistance

1. Remove the fuel pump fuse.

2. Remove connector B from the ECM and connect it to the ECM ADAPTER TOOL (P/N 529 036 166).



3. Set multimeter to Ω.
4. Measure fuel pump resistance as follows.

FUEL PUMP RESISTANCE TEST (AT ECM AND FUSE)		
TEST PROBES		RESISTANCE Ω @ 20°C (68°F)
Fuse box1 contact B4	ECM B-M1	Approximately 2 Ω

If resistance test failed, disconnect fuel pump connector and measure resistance at fuel pump connector.

FUEL PUMP RESISTANCE TEST (AT FUEL PUMP CONNECTOR)	
Pins A and B	Approximately 2 Ω

If test failed at pump connector, replace fuel pump.

If test succeeded at pump connector, check wiring and connectors from fuse box to ECM connector. Repair or replace as necessary.

Removing the Fuel Pump

1. Connect the vehicle to BUDS2 and select the following:
   - – **Functions** button
   - – Select: **Execute Fuel Pressure Relief**
2. Disconnect battery, refer to *CHARGING SYSTEM* subsection.
3. Remove right dashboard.

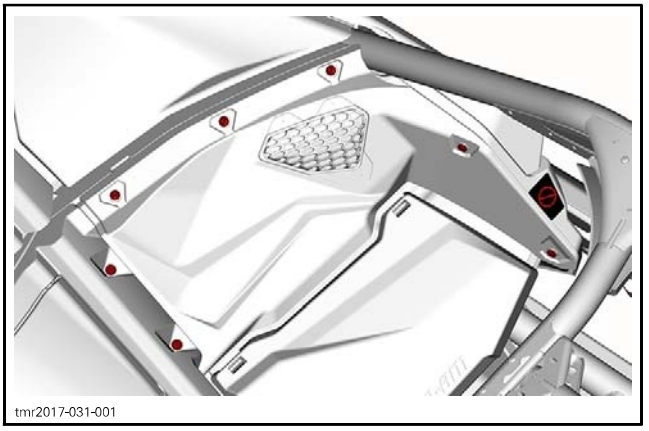

4. Remove connector cover.

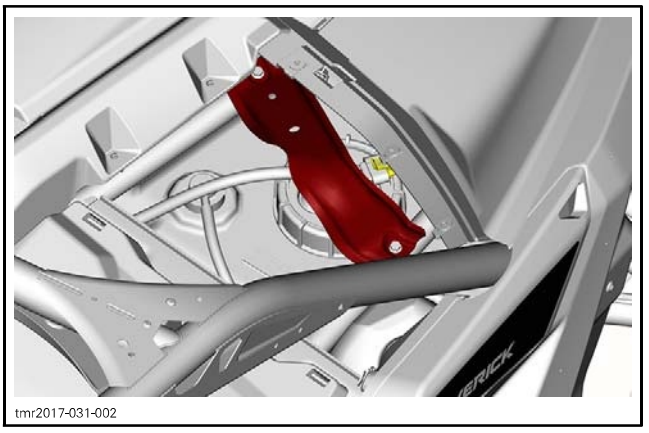

5. Disconnect fuel pump electric connector.
6. Disconnect high pressure fuel hose.

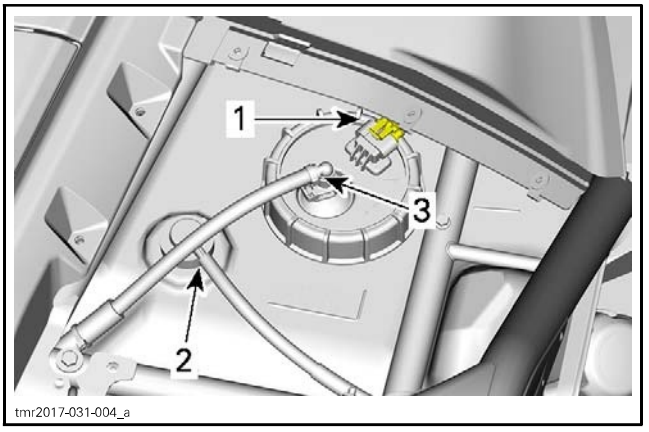

1. Fuel pump connector
2. Vent hose
3. High pressure fuel hose

7. Remove fuel pump locking ring.

⚠ WARNING

Fuel vapors are flammable and explosive under certain conditions. Use only non-sparking tools.

8. Carefully pull out fuel pump.

⚠ CAUTION While pulling out the fuel pump, pay attention to fuel sensor float arm. Float arm can get stuck and bend reducing fuel sensor accuracy.

9. Discard gasket ring.

Installing the Fuel Pump

For installation, reverse the removal procedure. However, pay attention to the following.

⚠ CAUTION Manipulate fuel pump with care.

1. Wipe off any fuel residue in the sealing area.
2. Install a NEW gasket ring.
3. Place gasket so that it is located between pump and tank mounting surface. Make sure gasket is sitting properly in place on the fuel tank without any folds or wrinkles, then lower the pump in place.
4. Pay attention to pump orientation as in following illustration.

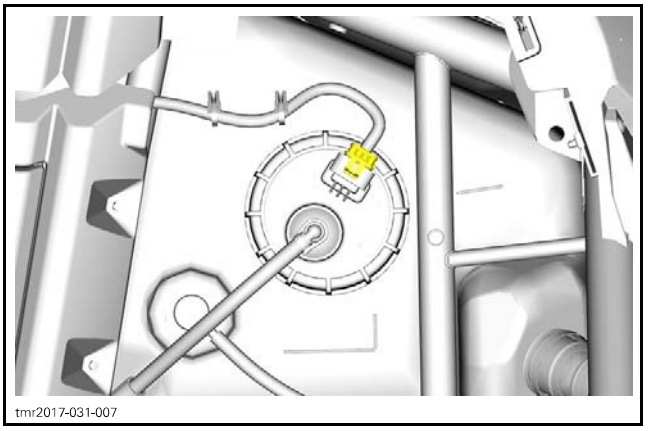

tmr2017-031-007

NOTE: Make sure arrow on fuel pump points toward the line on fuel tank.

5. Insert fuel pump locking ring over the fuel pressure hose and electrical wiring connector.
6. While firmly holding pump down against tank, engage fuel pump locking ring on fuel tank flange.
7. Turn locking ring until it is fully engaged.

NOTE: Make sure the pump body has not rotated during nut torquing procedure.

⚠ WARNING

Fuel vapors are flammable and explosive under certain conditions. Ensure pump locking ring is fully engaged.

8. Tighten locking ring to the proper torque.

TIGHTENING TORQUE	
Fuel pump locking ring	60 N•m ± 5 N•m (44 lbf•ft ± 4 lbf•ft)

9. Reconnect battery.
10. Refill fuel tank and ensure there are no leaks by performing a *FUEL TANK LEAK TEST* and a *FUEL PRESSURE TEST* as described in this subsection.
11. Check fuel level sensor operation.

FUEL FILTER

Removing the Fuel Filter

NOTE: The lower fuel filter on the fuel pump module does not require replacement under normal operating conditions. Replace only if permanently clogged or damaged.

Remove fuel pump. Refer to *FUEL PUMP* in this subsection.

⚠ WARNING

The upper filter and fuel pump reservoir on the fuel pump module contain fuel which will drain out when fuel pump module is not in an upright position.

Turn fuel pump upside down.

Using a small flat screwdriver, pry up the filter locking tabs.

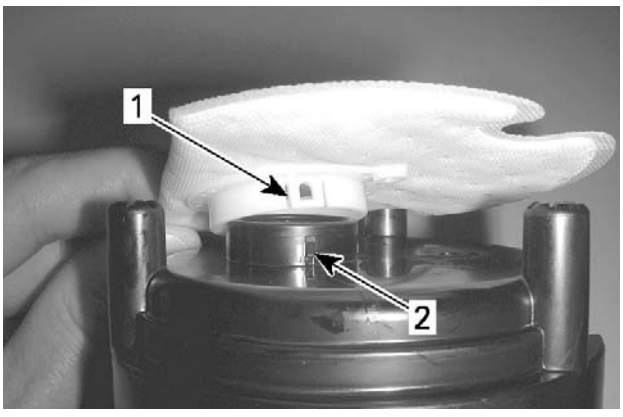

smr2008-022-013_a

1. Fuel filter locking tab (x2)
2. Filter locking pin (x2)

Pull filter off fuel pump reservoir housing.

Installing the Fuel Filter

Align new filter with pump reservoir housing.

Press new filter on by hand. Ensure it is fully seated and locked onto the pump reservoir housing.

Reinstall fuel pump as per procedure in this subsection.

Carry out a *FUEL SYSTEM HIGH PRESSURE LEAK TEST* as described in this subsection.

FUEL LEVEL SENSOR

The fuel level sensor is a float actuated variable resistance type that is part of the fuel pump.

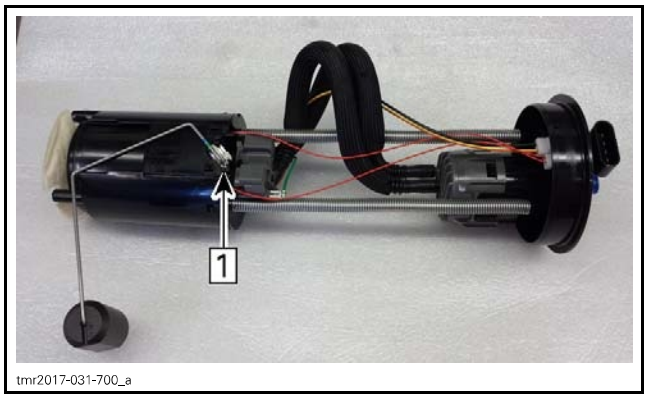

FUEL PUMP
1. Fuel level sensor

Testing Fuel Level Sensor Resistance

Remove and disconnect multifunction gauge, refer to the *GAUGE* subsection

FUEL LEVEL SENSOR RESISTANCE TEST		
FUEL LEVEL	GAUGE CONNECTOR	RESISTANCE Ω @ 20°C (68°F)
Full	Pins 4 and 21	5 Ω ± 2
Empty		90 Ω ± 3

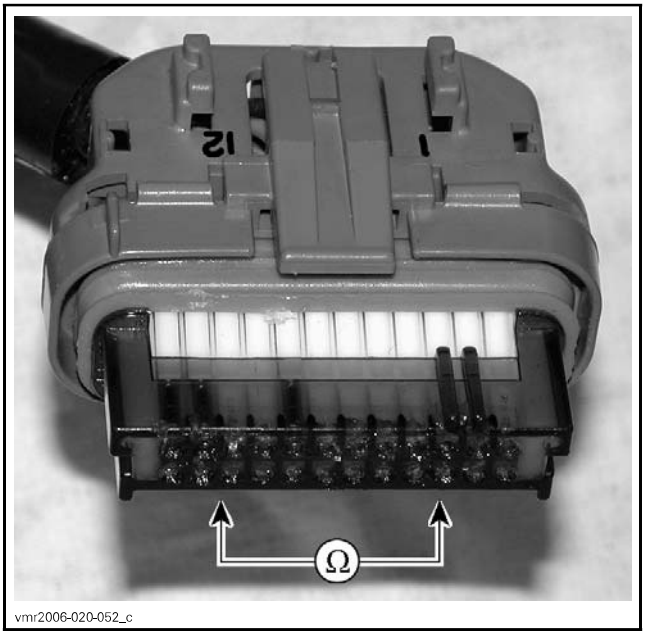

If readings are out of specification, repeat test at fuel pump connector. If resistance test at fuel pump connector is not good, replace fuel level sensor.

If readings are as specified, carry out an input voltage test. Refer to *TESTING FUEL LEVEL SENSOR INPUT VOLTAGE*.

Testing Fuel Level Sensor Input Voltage

Turn ignition key ON.

FUEL LEVEL SENSOR INPUT VOLTAGE TEST		
FUEL PUMP CONNECTOR	BATTERY	VOLTAGE
Pin C	Negative terminal	Battery voltage

If battery voltage is not read, test wiring continuity between sensor and multifunction gauge.

If wiring continuity is good, replace multifunction gauge.

If continuity is not obtained, repair or replace wiring.

Replacing the Fuel Level Sensor

Replace fuel pump. See fuel pump removal and installation procedures in this subsection.

FUEL TANK VENT VALVE

Testing the Fuel Tank Vent Valve

Test for Normal Operation

1. Disconnect vent hose from fuel tank vent valve.

2. Connect the VACUUM/PRESSURE PUMP (P/N 529 021 800) and a short piece of hose to the fuel tank vent valve.
3. Remove fuel tank cap.
4. Set vacuum/pressure pump to **PRESSURE** and activate pump. The gauge on the pump **should not change in reading**; air should flow through the vent valve and fuel tank freely.

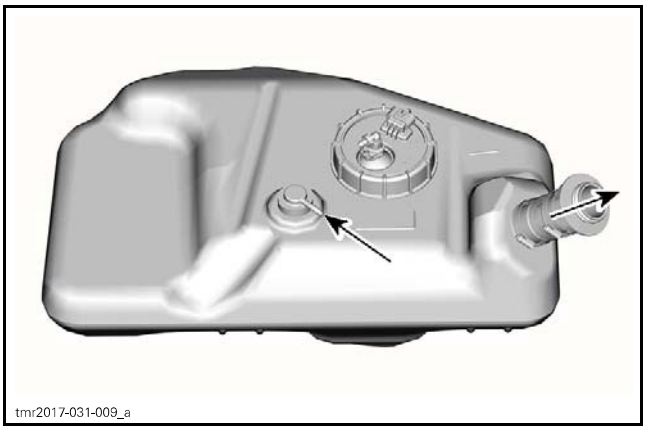

1. Air flows freely in through vent valve
2. Air flows out of fuel tank

5. Set vacuum/pressure pump to **VACUUM** and activate pump. The **gauge should not change in reading**; air should flow through the vent valve and fuel tank freely.

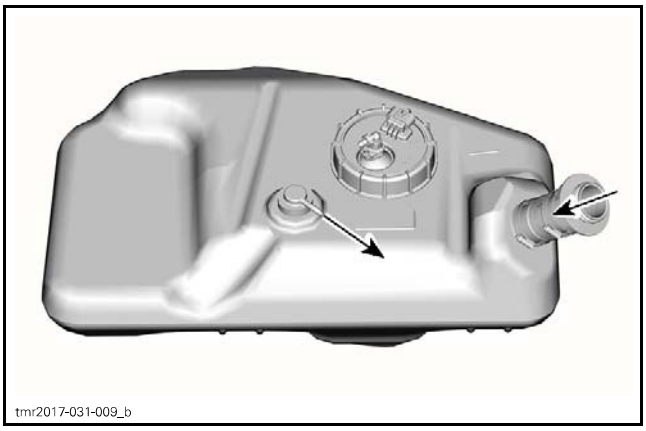

1. Air is drawn out freely through vent valve
2. Air flows in fuel tank

Testing for Rollover Protection

1. Remove the fuel tank, refer to *REMOVING THE FUEL TANK* in this subsection.
2. Turn the tank upside down.
3. Set vacuum/pressure pump to **VACUUM** and activate pump. The vacuum **gauge reading should increase**; air should **not flow through** the valve.

The fuel tank vent valve is defective if air flows freely through the valve when upside down and the vacuum indication does not increase on the pump gauge.

If the valve is defective, replace the fuel tank.

POWER DISTRIBUTION AND GROUNDS

GENERAL

Power distribution is shown in red on the color wiring diagram. Refer to *KNOWLEDGE CENTER*.

OVERVIEW

The battery is the primary source of power for the electrical system, it is recharged by the magneto.

Some components are permanently connected to the battery (unswitched) while some require a relay or switch to be closed (switched). Refer to the color *WIRING DIAGRAM* on *KNOWLEDGE CENTER*.

At high RPM if the magneto power is greater than the loads, the rectifier/regulator will regulate power as necessary.

The system uses an external voltage regulator/rectifier.

FUSE BOX 1

Fuse Box Location

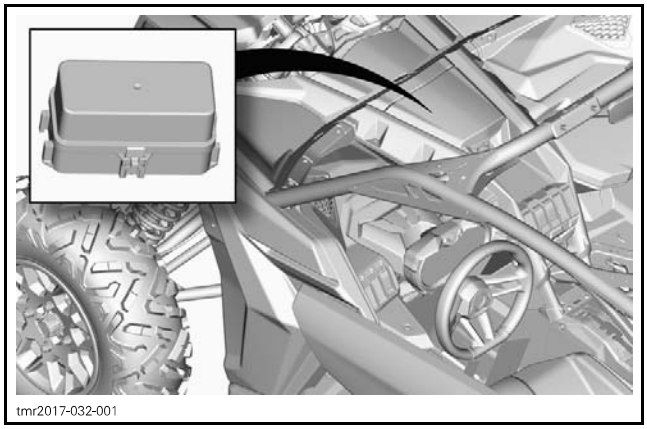

tmr2017-032-001

Fuse Identification

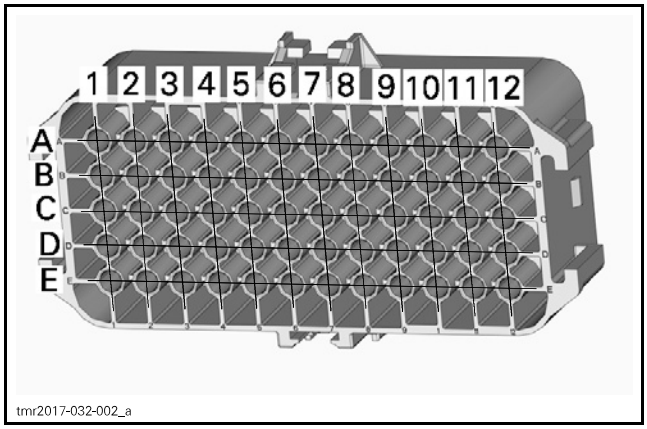

tmr2017-032-002_a

FUSE BOX 1 (PF1) REAR VIEW)

Fuses and numbers are listed on the fuse box cover, in the *TECHNICAL SPECIFICATIONS* subsection and on the *WIRING DIAGRAM*.

PF1 FUSE IDENTIFICATION			
Fuse	4	Gauge	10 A
	5	Ignition coils Fuel injectors	10 A
	6	Engine control module (ECM)	10 A
	7	4WD actuator	10 A
	8	Ignition switch Clock	10 A
	9	Cooling fan motor	25 A
	11	Headlamps	10 A
	12	Connectors (DC1 and DC3)	20 A
	14	Accessories	20 A
	16	Tail lamps	10 A
	17	Intercooler fan	20 A

Relays

Relays are in fuse box 1 (PF1).

Relays and numbers are listed on the fuse box cover, in the *TECHNICAL SPECIFICATIONS* subsection and on the *WIRING DIAGRAM*.

RELAY IDENTIFICATION		
Relays	1	Cooling fan
	2	Main
	3	Accessories
	8	Brake lights
	10	Intercooler fan

FUSE BOX 2

PF2 FUSE IDENTIFICATION			
Fuse	2	DPS	40 A

FUSIBLE LINKS

There are fusible links protecting power distribution to fuse box 1 (PF1).

The fusible links are near the starter solenoid.

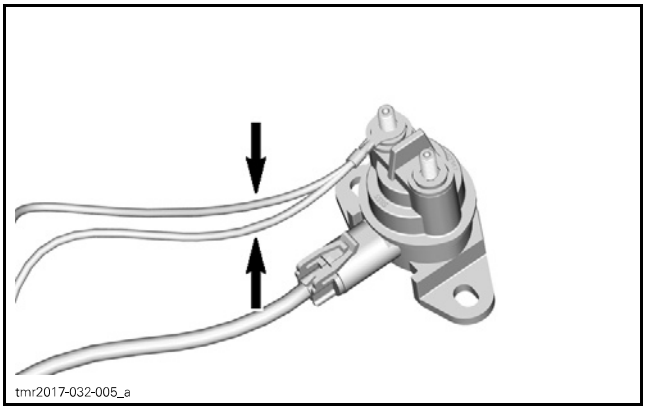
tmr2017-032-005_a

Fusible link gauge (AWG) varies by current capacity.

FUSIBLE LINK IDENTIFICATION			
Fusible link	FL-1	Main	16 AWG
	FL-2	Accessories	16 AWG

GROUND LOCATIONS

Chassis

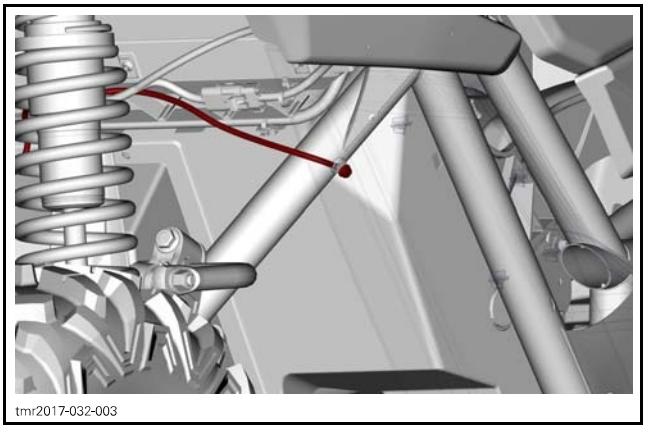
tmr2017-032-003

REAR RIGHT SIDE OF VEHICLE

TIGHTENING TORQUE	
Chassis ground screw	4.5 N•m ± 0.5 N•m (40 lbf•**in** ± 4 lbf•**in**)

Engine

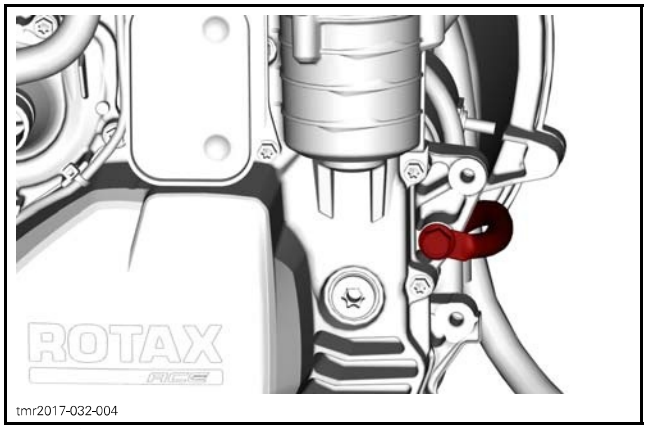

tmr2017-032-004

NEAR OIL FILTER

TIGHTENING TORQUE	
Engine ground screw	9 N•m ± 1 N•m (80 lbf•**in** ± 9 lbf•**in**)

WIRING HARNESSES AND CONNECTORS

SERVICE TOOLS

Description	Part Number	Page
CRIMPING TOOL (HEAVY GAUGE WIRE)	529 035 730	11
ECM ADAPTER TOOL	529 036 166	8
ECM TERMINAL REMOVER 2.25	529 036 175	8
ECM TERMINAL REMOVER 3.36	529 036 174	8

SERVICE TOOLS – OTHER SUPPLIER

Description	Part Number	Page
GM TERMINAL EXTRACTOR	12094430	5
SNAP-ON TERMINAL REMOVER TOOL	TT600-4	9

GENERAL

WIRING HARNESS AND SPLICE LOCATION

The wiring harnesses and splice location illustrations are typical. Several variants of the connector types, such as different number of pin cavities, are used on the vehicle. The wiring harnesses and splice location illustrations are stored in the back cover pocket.

For engine harness, consult applicable *ENGINE MANAGEMENT SYSTEM (EMS)* subsection.

HARNESS

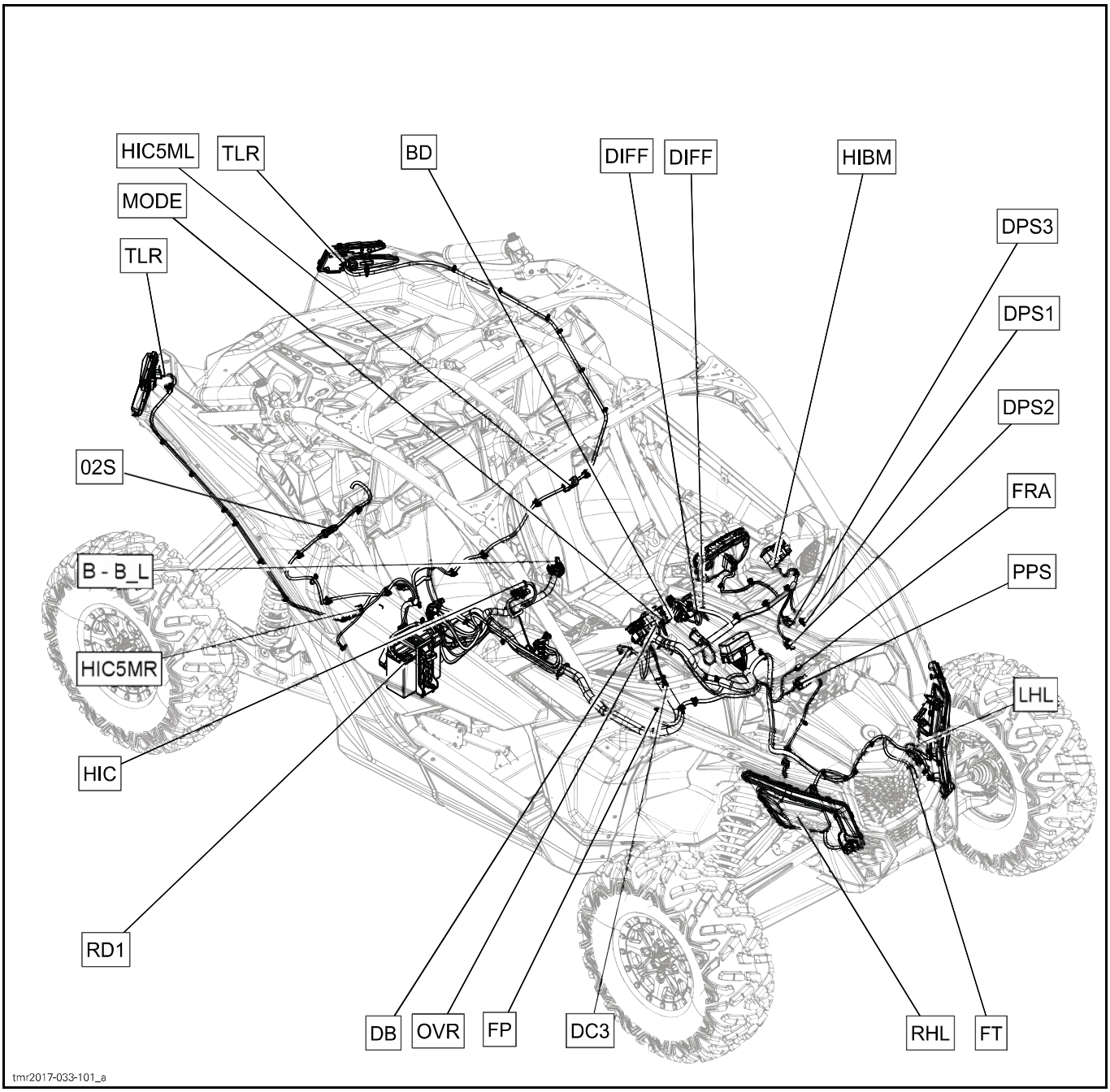
HIC5ML
TLR
BD
DIFF
DIFF
HIBM
MODE
TLR
DPS3
DPS1
DPS2
02S
FRA
B - B_L
PPS
HIC5MR
LHL
HIC
RD1
DB
OVR
FP
DC3
RHL
FT
tmr2017-033-101_a

ACRONYMS

ACRONYM	DESCRIPTION
BD	Multifunction Switch
DB	Diagnostic Connector
DIFF	Reverse Switch
DIFF	ECO/Sport Switch
DPS1	Digital Power Steering
DPS2	Digital Power Steering
DPS3	Digital Power Steering
FP	Fuel Pump
FT	Cooling Fan
LHL	Left Headlamp
HIBM	Hi Beam
HIC	Harness interconnect
HIC5MR	Harness interconnect Right
HIC5ML	Harness interconnect Left
MODE	2WD/4WD
O2S	Oxygen Sensor
OVR	DPS Switch
RHL	Right Headlamp
RD1	Voltage regulator/rectifier
TLR	Taillamp Right
TLL	Taillamp Left

PROCEDURES

DEUTSCH CONNECTORS

Deutsch Connector Application

A variety of Deutsch connectors are used on various systems:

– Engine connector
– Magneto connector.

The following procedures may be used on each as they are similar in construction.

Deutsch Connector Removal from its Support

1. Insert a small flat screwdriver between the support and the Deutsch connector.
2. Pry the connector away from the support slightly while sliding it out in the direction shown.

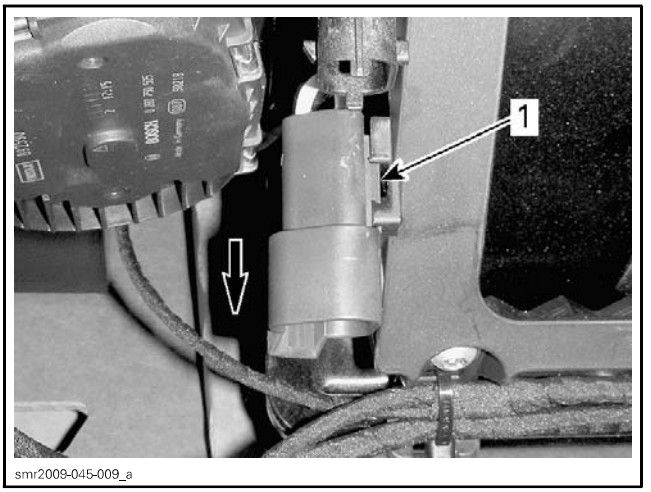

TYPICAL - MALE CONNECTOR REMOVED FOR CLARITY
1. Insert screwdriver here

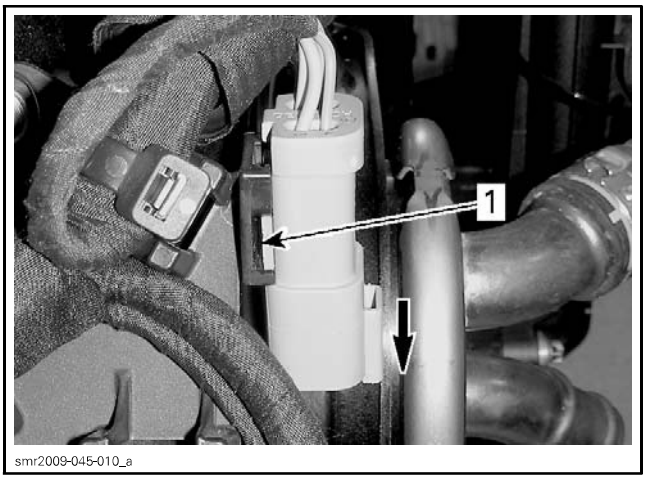

TYPICAL - MALE CONNECTOR REMOVED FOR CLARITY
1. Insert screwdriver here

Deutsch Connector Disconnect

1. To disconnect a Deutsch connector, press the release tab and twist a small flat screwdriver between the male and female housing to disengage and disconnect them.

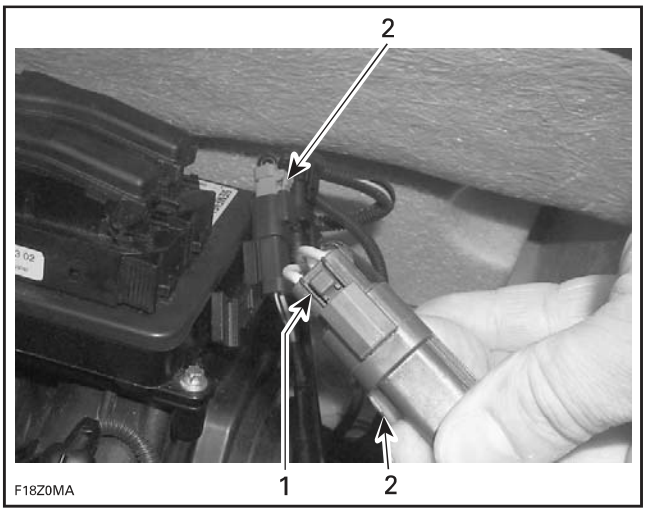

TYPICAL
1. *Release tab*
2. *Deutsch connector*

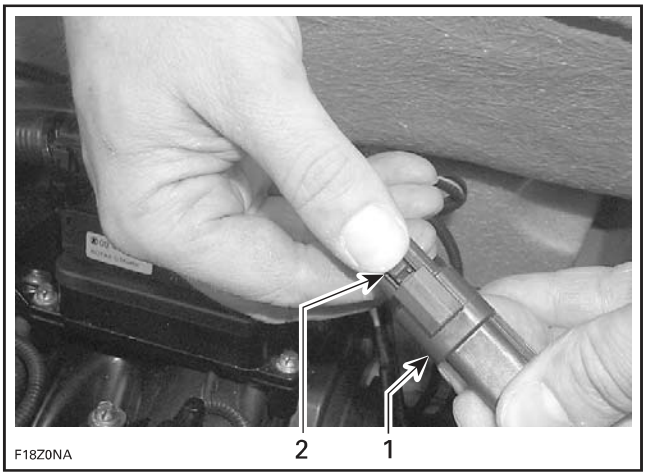

TYPICAL
1. *Deutsch connector*
2. *Press release button*

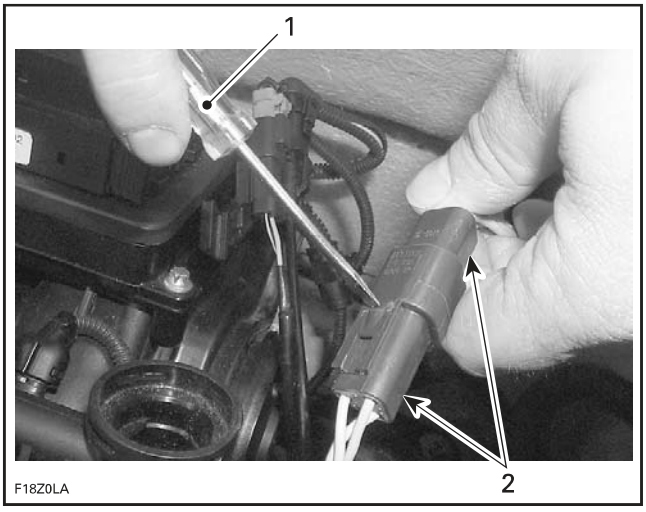

TYPICAL
1. *Flat screwdriver*
2. *Deutsch connector*

Deutsch Connector Disassembly and Reassembly

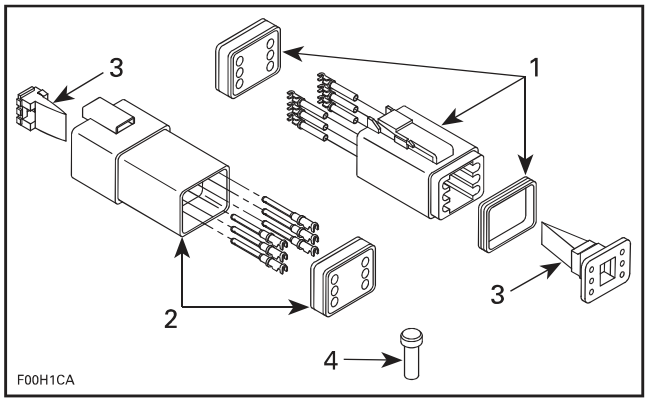

TYPICAL - DEUTSCH CONNECTOR
1. *Male connector*
2. *Female connector*
3. *Secondary lock*
4. *Sealing cap*

NOTICE Do not apply dielectric grease on terminal inside connector.

Terminal Removal

To remove terminals from connector, proceed as follows:

1. Using long nose pliers, pull out the secondary plastic lock from between the terminals.

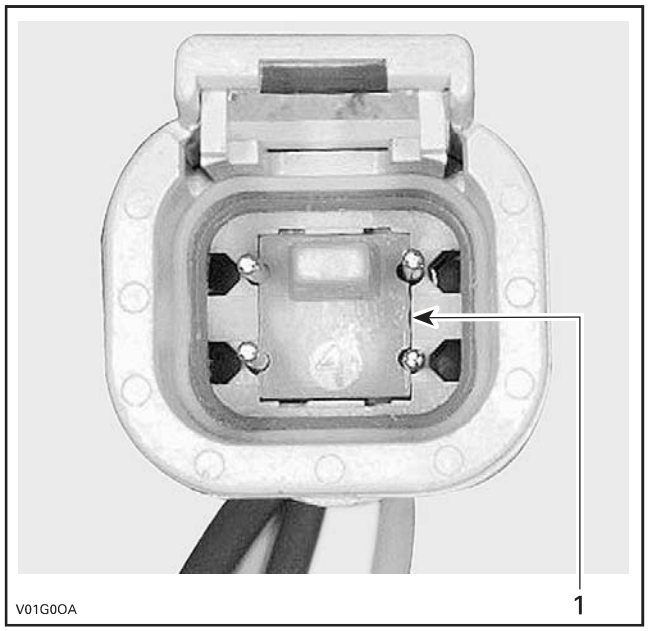

FEMALE CONNECTOR
1. *Female lock*

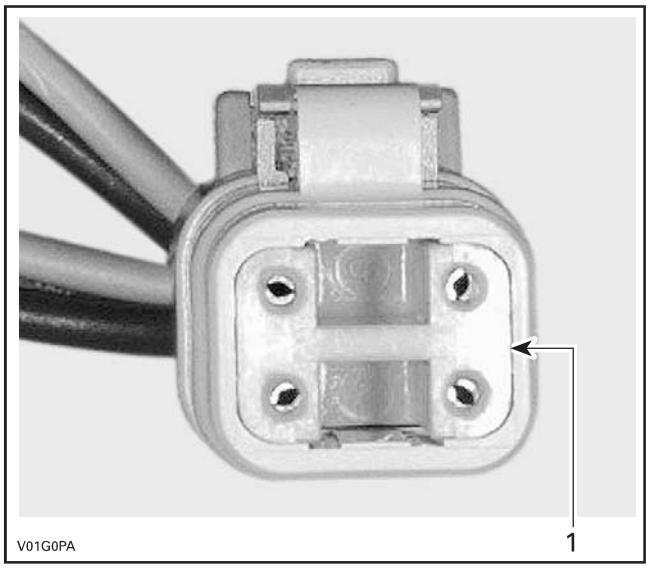

MALE CONNECTOR
1. Male lock

NOTE: Before pin extraction, push wire forward to relieve pressure on retaining tab.

2. Insert a 4.8 mm (.189 in) wide screwdriver blade inside the front of the terminal cavity.
3. Pry the retaining tab away from the terminal while gently pulling the wire and terminal out of the back of the connector.

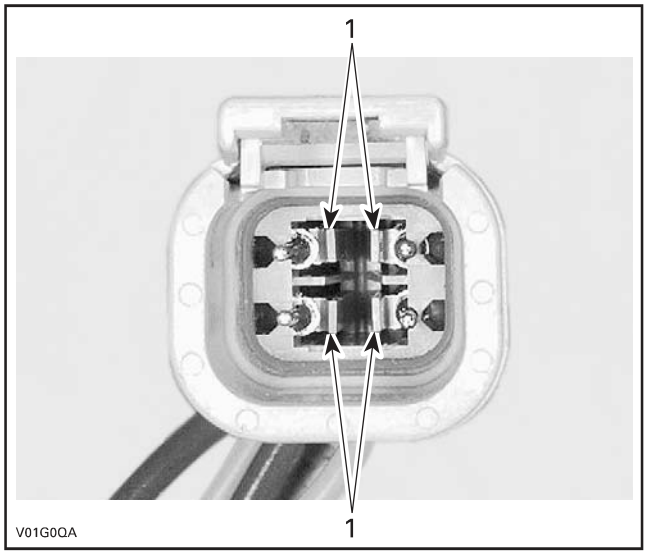

FEMALE CONNECTOR
1. Retaining tab

Terminal Insertion

1. For insertion of a terminal, ensure the secondary plastic lock is removed.
2. Insert terminal through the back of the connector in the appropriate position, and push it in as far as it will go. You should feel or hear the terminal lock engage.
3. Pull back on the terminal wire to be sure the retention fingers are holding the terminal.
4. After all required terminals have been inserted, the lock must be installed.

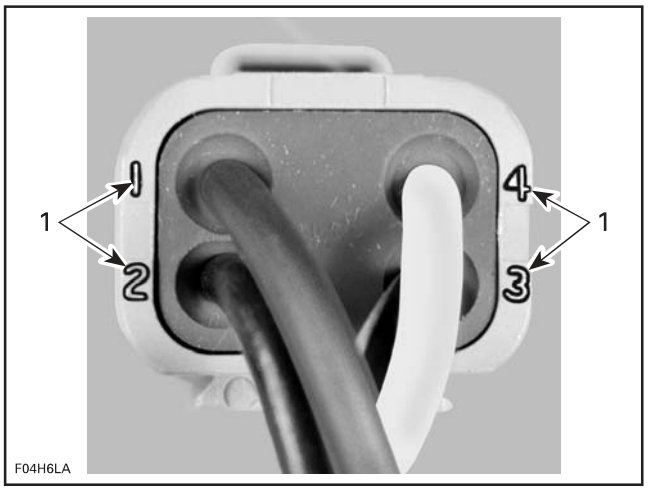

CONNECTOR PIN-OUT
1. Terminal position identification numbers

FURUKAWA CONNECTOR

Furukawa Connector Application

Voltage regulator/rectifier.

Terminal Removal

1. Remove the secondary lock (plastic insert).

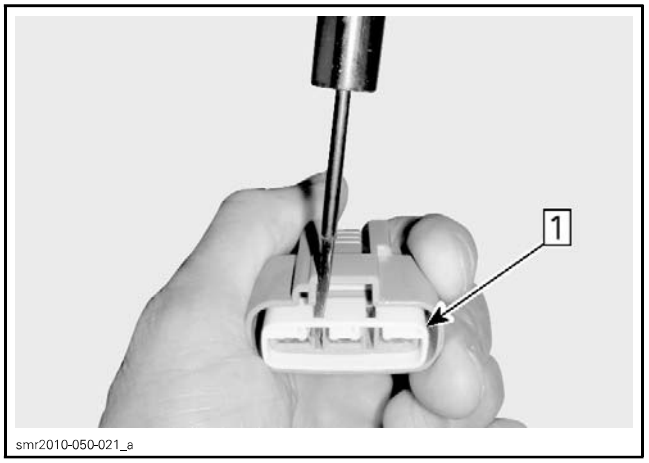

Step 1: Remove the secondary lock

2. Carefully insert the GM TERMINAL EXTRACTOR (P/N 12094430) between the lock and the pin to release the pin.



smr2010-052-003

GM TERMINAL EXTRACTOR (P/N 12094430)

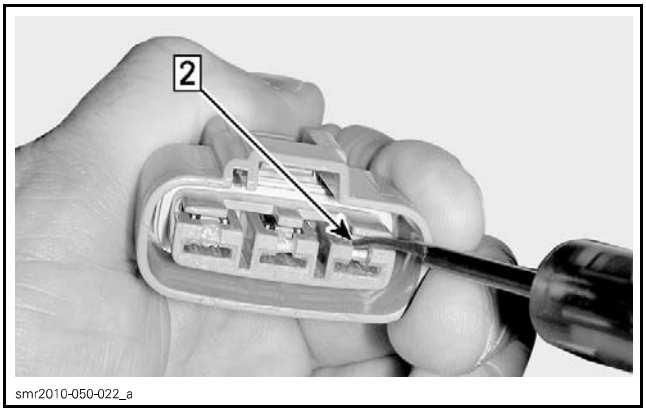

smr2010-050-022_a

Step 2: Insert GM extractor tool (P/N 12094430)

3. Gently pull on the wire to extract the pin out the back of the connector.

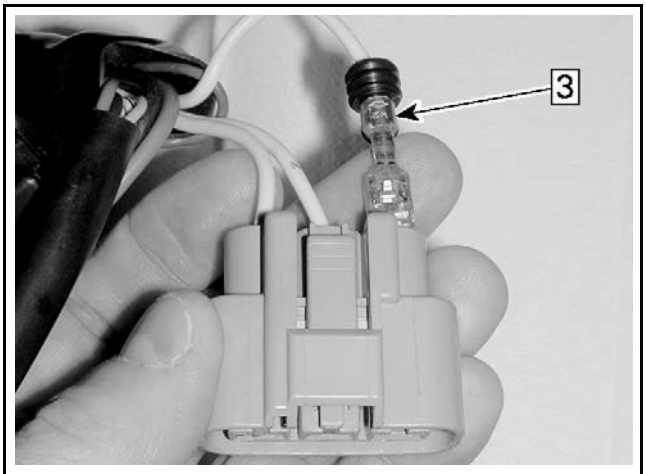

smr2010-050-023_a

Step 3: Pull wire to extract pin

NOTICE Before installing terminals in the connectors, ensure all terminals are properly crimped on the wires. After installation of the wire terminals in the connectors, ensure they are properly locked by gently pushing on them as if to extract them.

MOLEX CONNECTOR

Molex Connector Application

The Molex connector is used on the ECM.

There are 2 MOLEX connectors on the ECM.

The engine wiring harness connector is connected to ECM connector "A". The vehicle wiring harness connector is connected to ECM connector "B".

Each ECM connector has 48 pins.

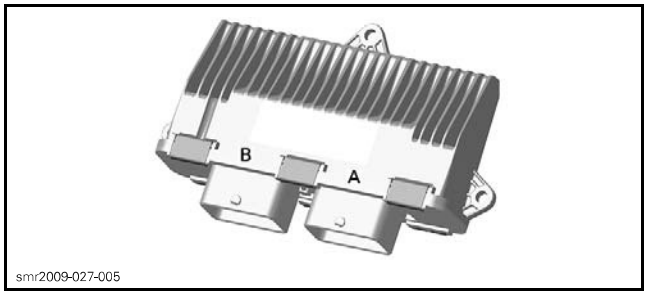

smr2009-027-005

ECM CONNECTORS

Do not apply any product to the pins in the ECM connector.

Connector Removal

1. To access the ECM, refer to *ELECTRONIC FUEL INJECTION* subsection.
2. Press and hold the locking tab on the connector to be disconnected.

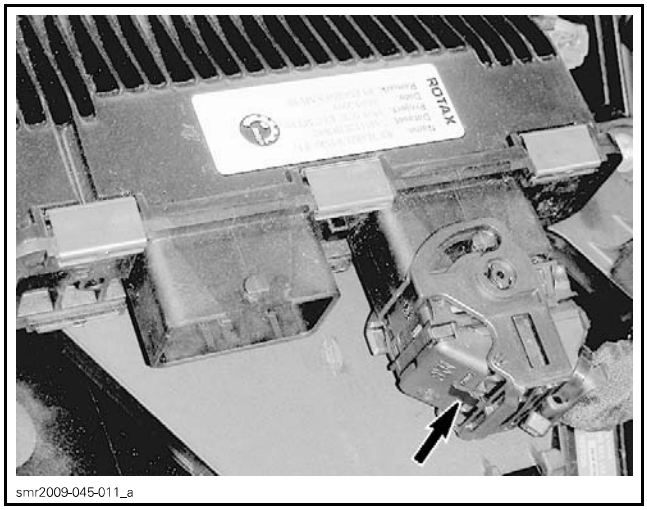

smr2009-045-011_a

LOCKING TAB TO PRESS AND HOLD

3. As you hold the locking tab, rotate the connector locking cam until it stops.

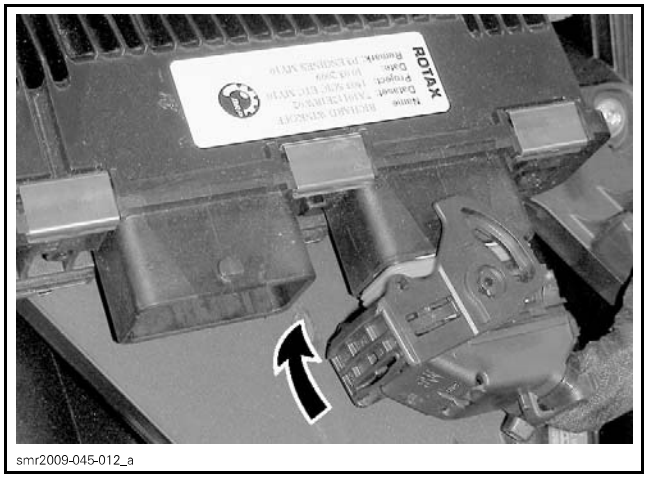

smr2009-045-012_a

CONNECTOR LOCKING CAM ROTATION TO RELEASE

4. Pull connector off ECM.

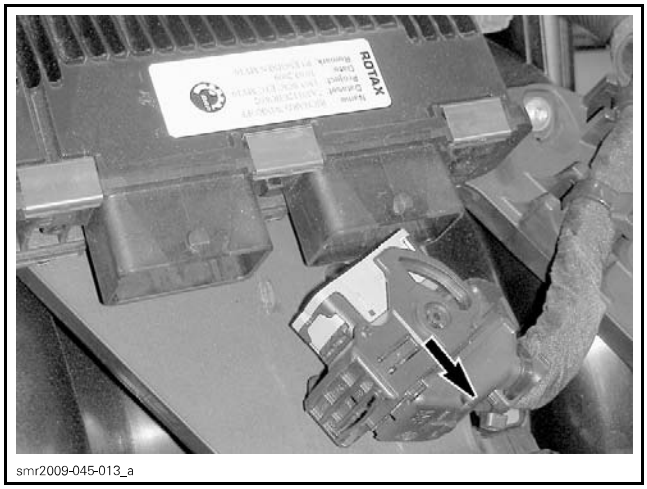

smr2009-045-013_a

Connector Installation

1. Fully open connector locking cam.

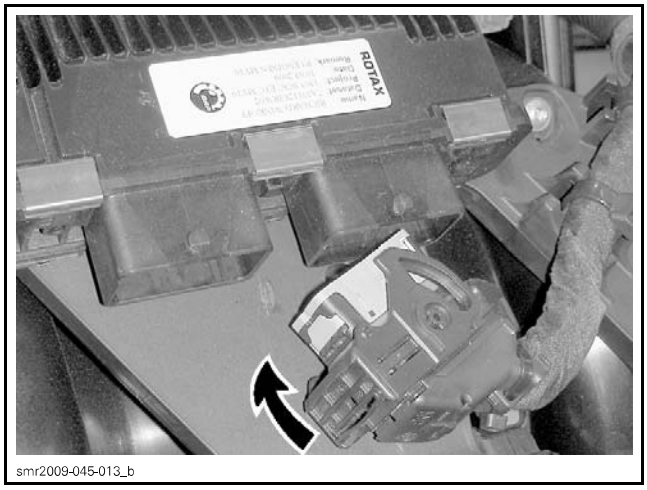

smr2009-045-013_b

CONNECTOR LOCKING CAM IN RELEASE POSITION

2. Insert connector on ECM.
3. As you push the connector onto the ECM, rotate the connector locking cam until it snaps locked.

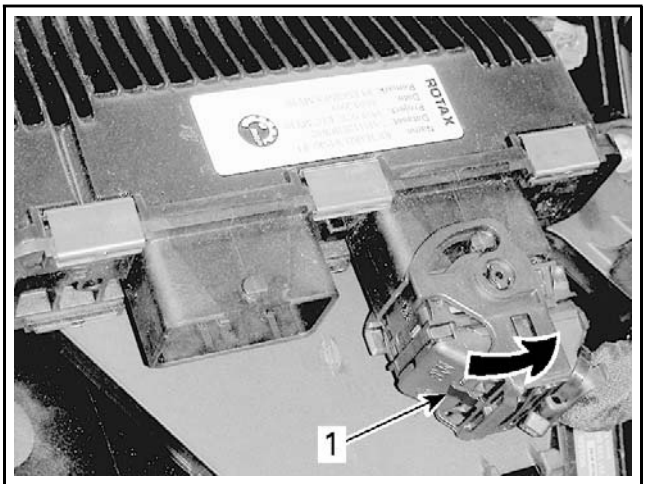

smr2009-045-011_b

1. Locked here

4. Ensure the locking tab is fully out.

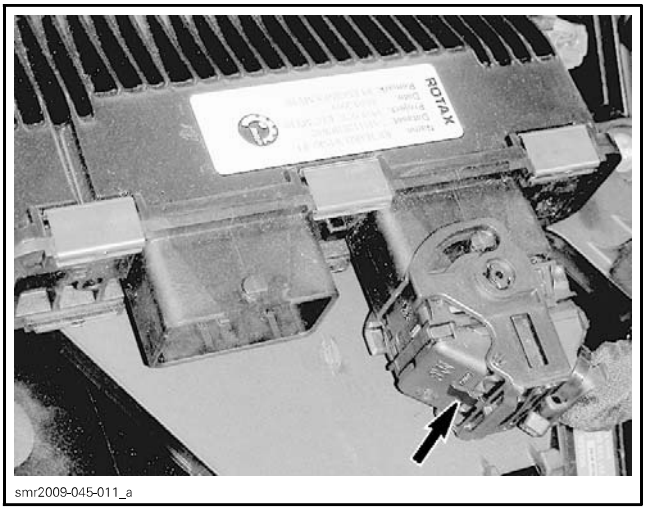

smr2009-045-011_a

LOCKING TAB FULLY OUT

Connector Inspection

Before replacing an ECM, always check electrical connections.

1. Ensure connector locking mechanism is functioning properly.
2. Ensure all wire terminals (pins) are properly locked in the connector.
3. Ensure they are very tight, make good contact with the pins in the ECM.
4. Ensure the pins in the harness connector and the ECM connector are clean, shiny and corrosion-free.
5. Check wiring harness for signs of scoring.

NOTE: A "defective ECM module" could possibly be repaired simply by disconnecting and reconnecting it.

NOTICE Do not apply any lubricant product to the pins of the ECM connector.

Connector Probing

The most recommended and safest method to probe the MOLEX (ECM) connector terminals is to use the ECM ADAPTER TOOL (P/N 529 036 166). This tool will prevent deforming or enlarging of the terminals, which would lead to bad ECM terminal contact creating intermittent or permanent problems.



1. Disconnect the ECM connector to be probed, and reconnect it on the ECM adapter.
2. Probe wire terminals of the circuit to be tested directly in the adapter holes.

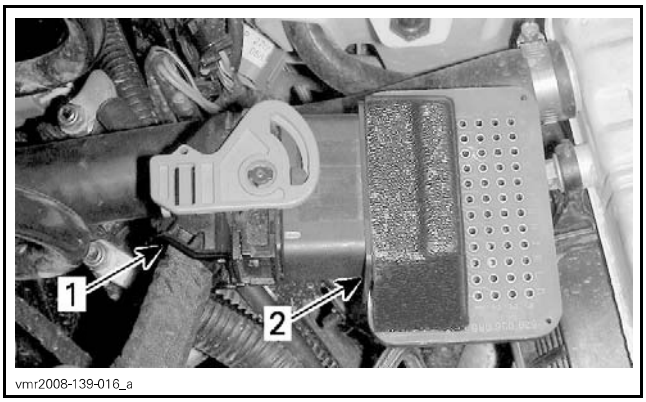

TYPICAL
1. ECM connector
2. ECM adapter

NOTICE Never probe directly on the ECM harness connector. This could change the shape or enlarge the terminals and create intermittent or permanent contact problems.

Connector Terminal Removal (Harness Connector)

To remove a signal terminal from the ECM harness connector, use the ECM TERMINAL REMOVER 2.25 (P/N 529 036 175).

To remove a power terminal, use the ECM TERMINAL REMOVER 3.36 (P/N 529 036 174).

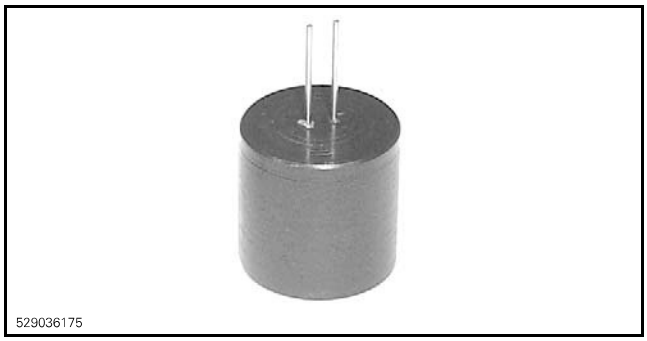

1. Remove rear protector from connector.
2. Pull out the connector lock.

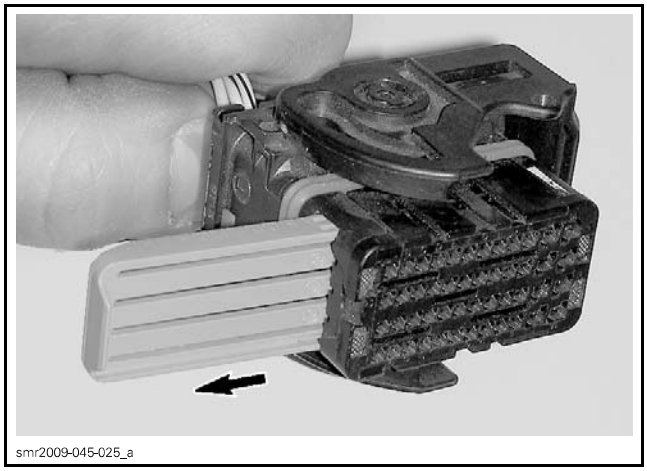

3. Insert tool to unlock terminal.

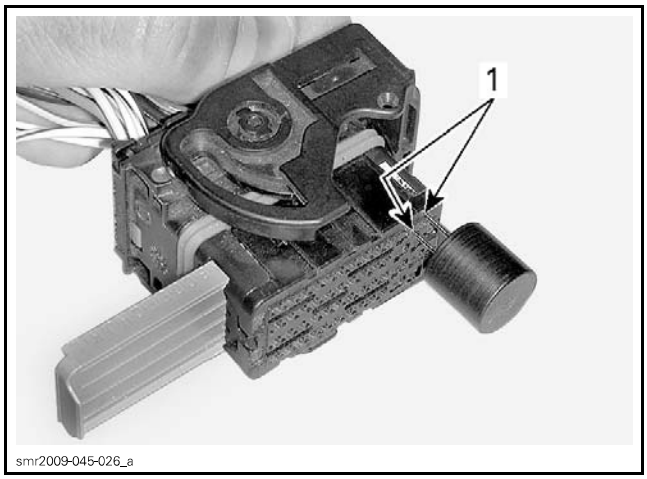

1. Unlock here

4. Gently pull on the wire to extract the terminal out the back of the connector.

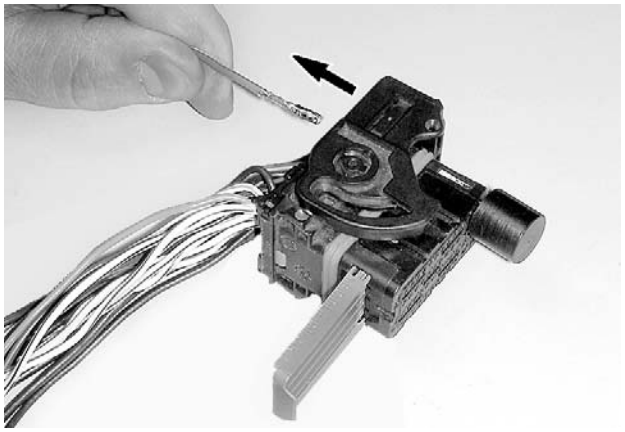
smr2009-045-027_a

NOTICE Before installing wire terminals in the connector, ensure all terminals are properly crimped on wires. After installation of wire terminals in the connectors, ensure they are properly locked by gently pulling on them as if to extract them.

PACKARD CONNECTORS

Packard Connector Application

Packard connectors are used to connect:
- Electrical harnesses
- Gauges
- VCM
- EFB
- Headlamps.

3-Pin Packard Connector

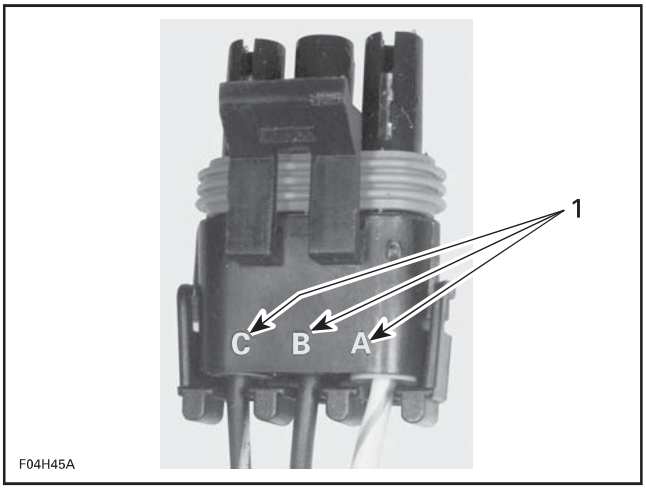

VIEW OF A 3-PIN PACKARD CONNECTOR
1. Identification letters

NOTE: This type of connector also comes in other pin configurations.

To remove a terminal from a 3-pin Packard connector, use the SNAP-ON TERMINAL REMOVER TOOL (P/N TT600-4).

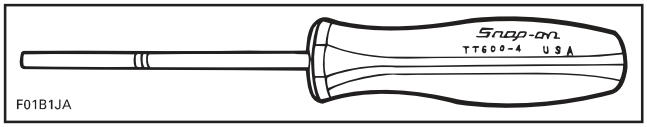

⚠ WARNING

Ensure all terminals are properly crimped on wires and connectors are properly fastened.

PACKARD CONNECTOR (MULTIFUNCTION GAUGE)

Firmly push down tab and hold to unlock connector while pulling it out.

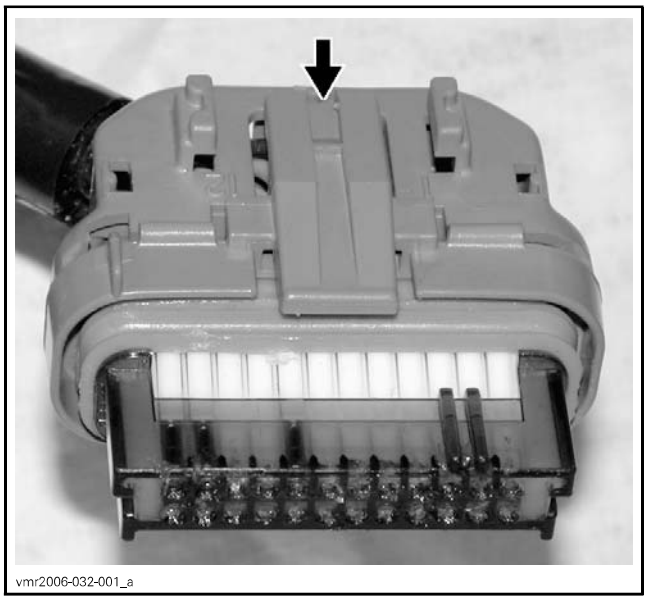
vmr2006-032-001_a

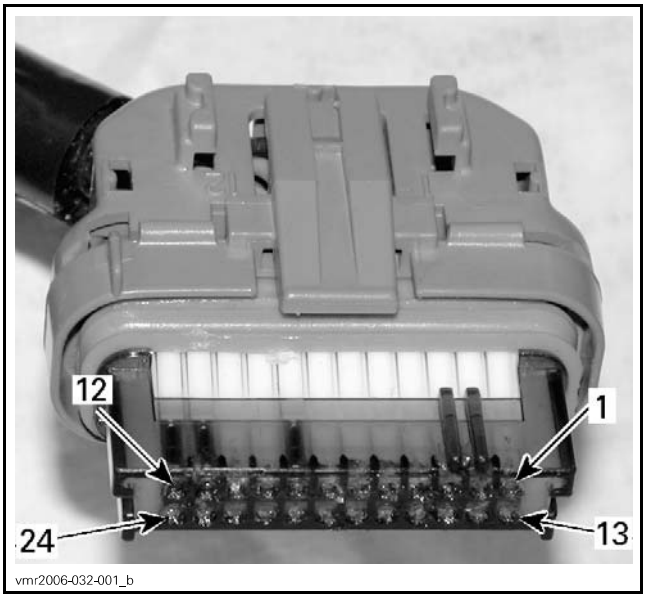

CONNECTOR PINOUT

Push on both tabs to remove retainer.

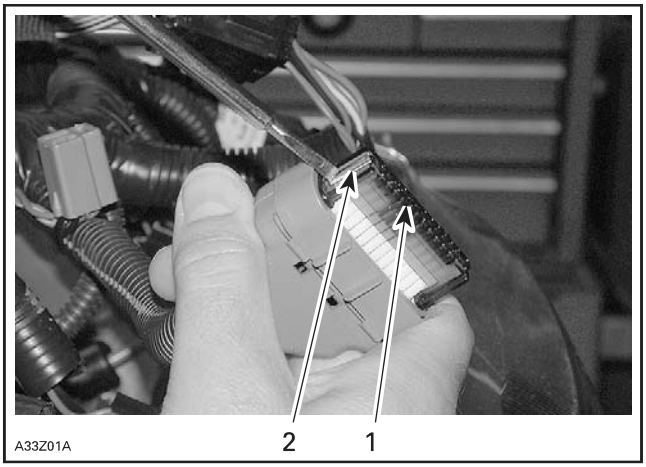

TYPICAL
1. *Retainer*
2. *Tab (one on each side)*

Open housing by lifting 4 tabs.

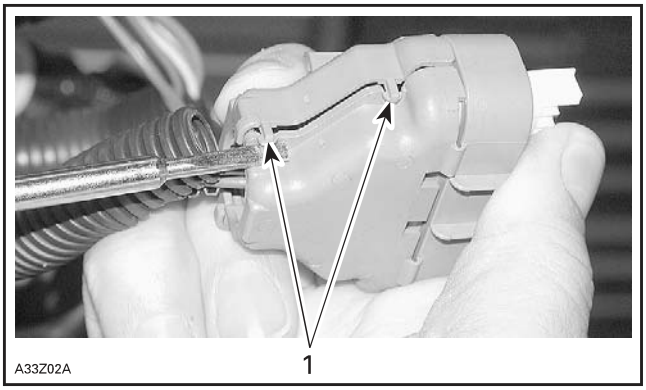

TYPICAL
1. *Tabs (2 on each side)*

Lift the top plastic lock of the female terminal to be removed and hold in position. Lift the female terminal to unlock from the housing and push out of housing.

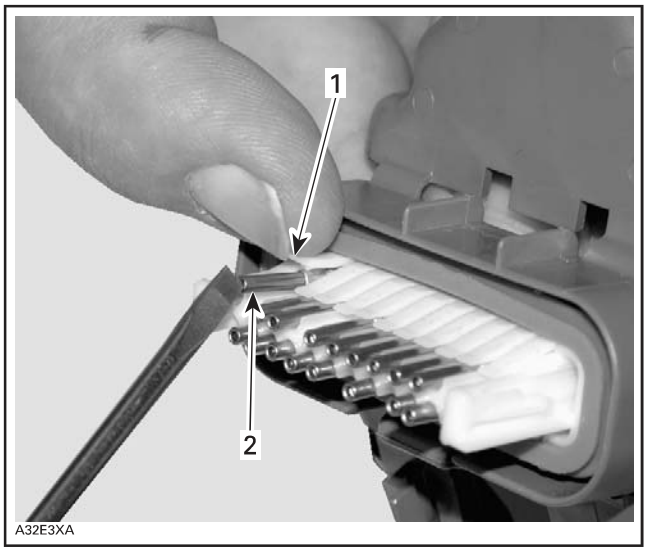

TYPICAL
1. *Lift and hold plastic lock*
2. *Lift to unlock and push out*

BATTERY AND STARTER CABLE TERMINALS

Cable Crimping

Carefully strip the wire approximately to 10 mm (3/8 in) in length, using a wire stripping tool or sharp blade/knife.

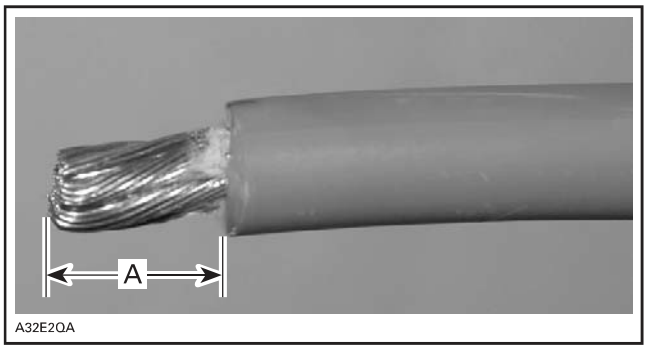

A. 10 mm (3/8 in)

NOTE: Make sure not to cut wire strands while stripping the wire.

Install the appropriate terminal on the wire according to the requirement. Refer to appropriate *PARTS CATALOG*.

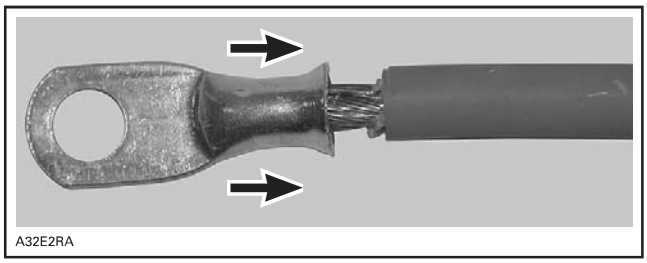
A32E2RA

INSTALLATION OF TERMINAL

Follow the instructions provided with the CRIMPING TOOL (HEAVY GAUGE WIRE) (P/N 529 035 730) to select the proper position of the tool.

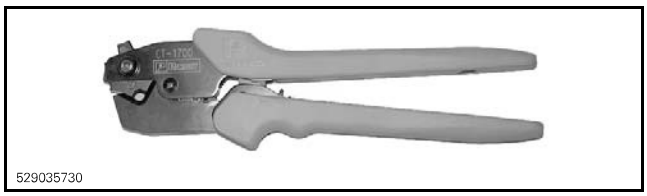
529035730

NOTE: Different wires require different crimping pliers settings.

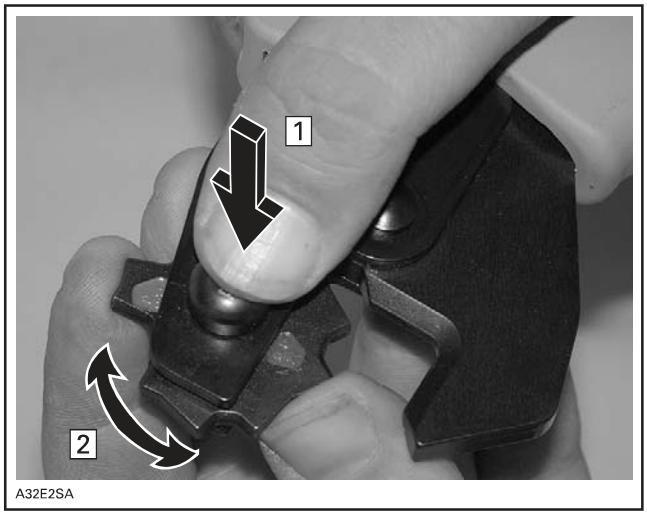

A32E2SA

POSITIONING THE CRIMPING PLIERS
Step 1: Press
Step 2: Rotate

After positioning the crimping pliers, crimp the terminal already installed on wire.


A32E2TA

CRIMPING OF WIRE

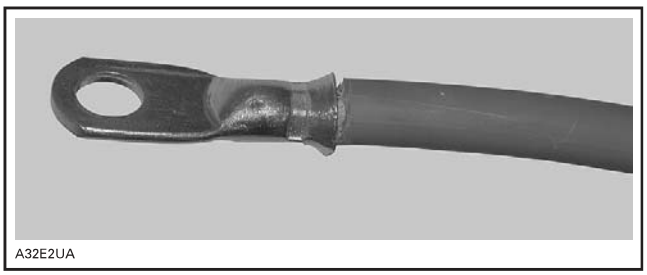
A32E2UA

PROPERLY CRIMPED WIRE

To verify, if the wire is properly crimped, apply some pulling force on wire and the terminal at the same time from both directions.

NOTICE **Never weld the wire to the terminal. Welding can change the property of the wire and it can become brittle and break.**

Install the protective heat shrink rubber tube on the terminal. Heat the heat shrink rubber tube using the heat gun so that it grasps the wire and the terminal.

NOTICE **Make sure that the protective heat shrink rubber tube has been properly installed and no part of wire is exposed.**

IGNITION COILS AND SPARK PLUGS

SERVICE TOOLS

Description	Part Number	Page
ECM ADAPTER TOOL	529 036 166	3
FLUKE 115 MULTIMETER	529 035 868	2–3

SERVICE PRODUCTS

Description	Part Number	Page
HEAT-SINK PASTE P12	420 897 186	5

GENERAL

⚠ WARNING

Torque wrench tightening specifications must be strictly adhered to.
Locking devices when removed (e.g.: locking tabs, elastic stop nuts, self-locking fasteners, cotter pins, etc.) must be replaced.

Hoses, cables or locking ties removed during a procedure must be reinstalled as per factory standards.

⚠ WARNING

Never check for engine ignition spark from an open coil and/or spark plug as spark may cause potential fuel vapors to ignite. Always use an approved spark tester.

PROCEDURES

IGNITION COILS

Ignition Coil Access

Remove the following parts and fasteners.

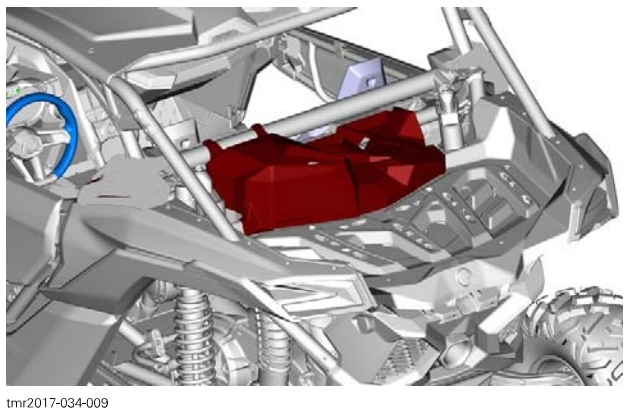

tmr2017-034-009

Remove rear service cover.

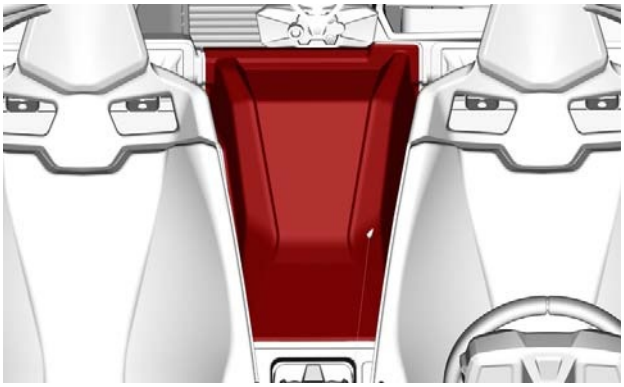

tmr2017-034-001

Remove intercooler screws.

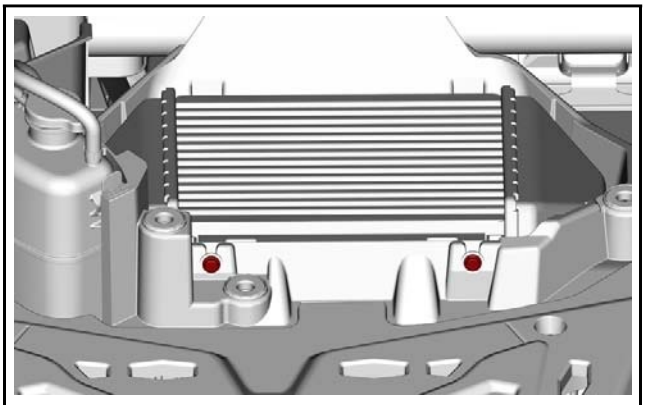

tmr2017-034-007

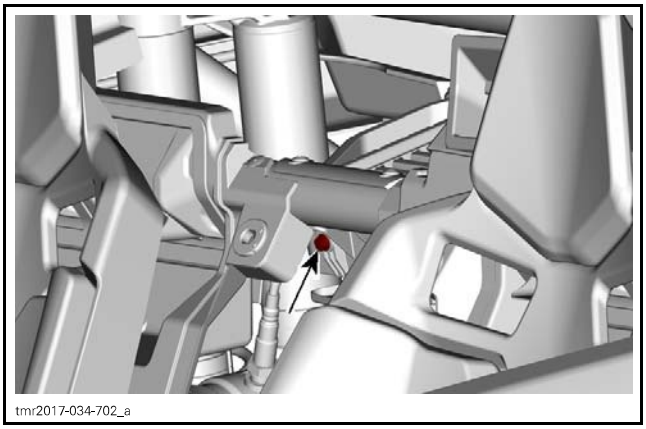
tmr2017-034-702_a

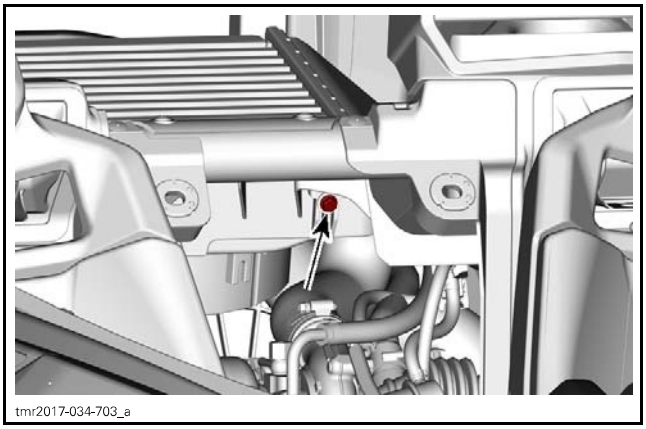
tmr2017-034-703_a

Disconnect intercooler hose.

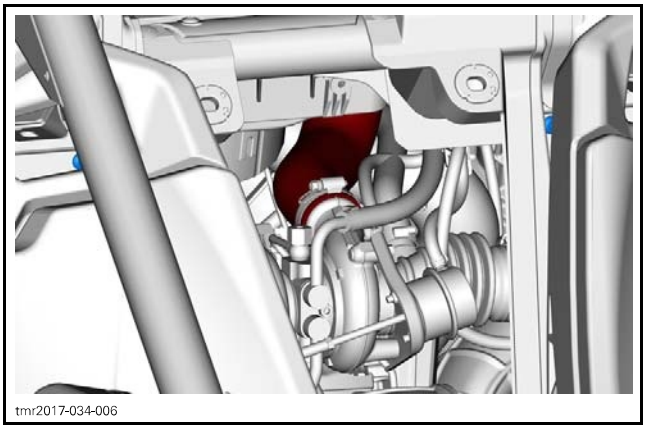
tmr2017-034-006

Lift intercooler assembly.

Disconnect intercooler fan connector.

Set intercooler aside.

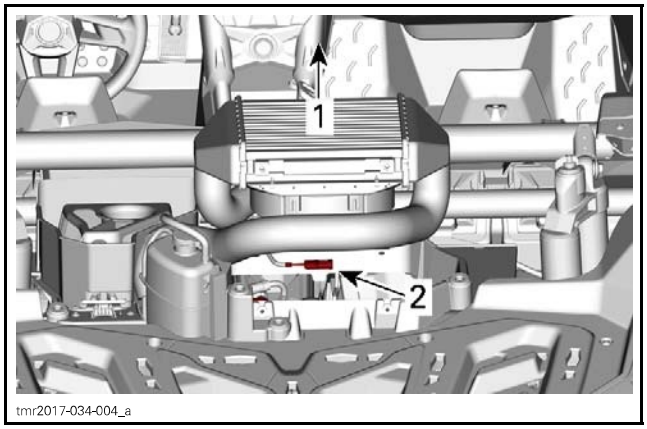

tmr2017-034-004_a

1. *Intercooler assembly*
2. *Intercooler fan connector*

Testing the Ignition Coil

1. Connect to BRP diagnostic software. Refer to *COMMUNICATION TOOLS* subsection.
2. Select the **Function** and **ECM** tabs.
3. Energize the ignition coil to be tested.

You should hear the spark occurring. If in doubt, use a sealed **vapor proof** spark tester or an inductive spark tester as available from tool suppliers, to prevent a spark from occurring.

If there is no ignition at one or more coils, carry out *TESTING THE IGNITION COIL INPUT VOLTAGE*.

If spark is weak, try a new spark plug. If spark is still weak, try a new ignition coil.

NOTE: The voltage required to produce a spark in the combustion chamber is higher when the engine is running.

Testing the Ignition Coil Input Voltage

Make sure fuse F5 and the relay are good before testing.

1. Disconnect the applicable ignition coil connector.
2. Install key on the D.E.S.S. post.
3. Set multimeter to Vdc.

REQUIRED TOOL	
FLUKE 115 MULTIMETER (P/N 529 035 868)	

4. Press the START/STOP button to activate the ECM.

NOTE: Do not press the brake pedal.

5. Measure voltage.

TEST PROBES		VOLTAGE
Ignition coil connector Pin 1 (ignition coil no. 1)	Battery ground	Battery voltage
Ignition coil connector Pin 1 (ignition coil no. 2)		
Ignition coil connector Pin 1 (ignition coil no. 3)		

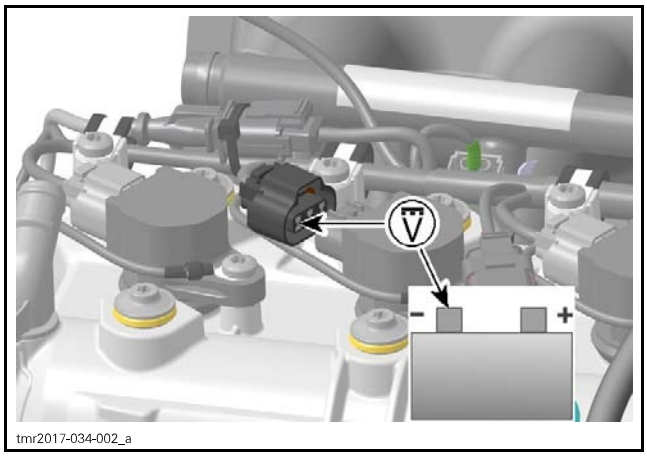

IGNITION COIL INPUT VOLTAGE TEST

If test succeeds, carry out a *TESTING THE IGNITION COIL RESISTANCE*.

If test fails, carry out a *TESTING THE IGNITION COIL POWER CIRCUIT CONTINUITY*.

Testing the Ignition Coil Power Circuit Continuity

1. Set multimeter to Ω.

REQUIRED TOOL	
FLUKE 115 MULTIMETER (P/N 529 035 868)	

2. Read resistance of the desired ignition coil circuit.

IGNITION COIL	PIN	FUSE BOX	MEASUREMENT
1	2	Terminal B4	Close to 0 Ω
2			
3			

If test fails at any ignition coil, test the following items separately and repair/replace wiring or terminals from fuse box to the applicable ignition coil. Refer to *WIRING DIAGRAM* for details.

– Wiring from fuse box to engine connector
– Wiring from engine connector to ignition coil.

Testing the Ignition Coil Control Circuit Continuity

1. Disconnect ECM connector "A". For connector identification, refer to *WIRING HARNESS AND CONNECTOR* subsection.
2. Connect ECM connector to ECM adapter tool.

REQUIRED TOOL	
ECM ADAPTER TOOL (P/N 529 036 166)	

3. Disconnect ignition coil connector.
4. Test for continuity of circuit as per following table.

IGNITION COIL	PIN	ECM ADAPTER	RESISTANCE
Cylinder 1	1	A-M4	Close to 0 Ω (continuity)
Cylinder 2		A-M2	
Cylinder 3		A-M1	

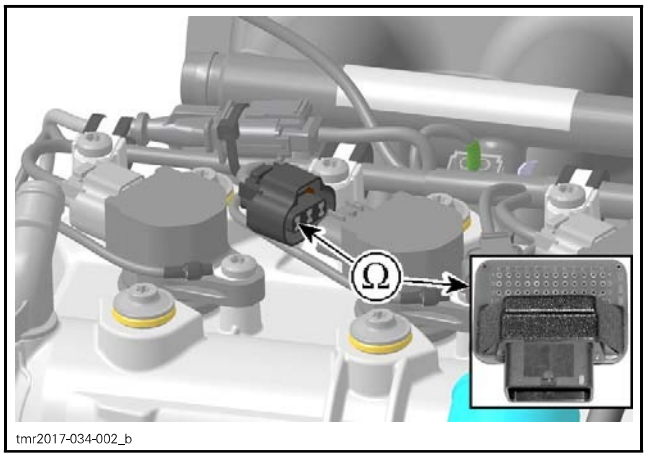

IGNITION COIL CONTROL CIRCUIT TEST

If test fails, repair the connector or replace the engine wiring harness.

Testing the Ignition Coil Resistance

An ignition coil with a good resistance measurement can still be faulty. Current leakage can occur at high voltage levels which is not detectable with an ohmmeter. Replacing the ignition coil may be necessary as a test.

1. Remove ignition coil. Refer to *REMOVING THE IGNITION COIL* in this subsection.
2. Perform a visual inspection of the ignition coils. Check for corrosion, bent pins, loose or burnt contacts, and cracked or torn insulator.

3. Using a multimeter, test the resistance of primary winding.



PRIMARY WINDING

CIRCUIT	TERMINAL	RESISTANCE @ 20°C (68°F)
Primary winding	1 and 2	0.85 - 1.15 Ω

NOTICE The secondary winding on this type of ignition coil cannot be tested.

If test fails, replace ignition coil.

If test succeeds, carry out *TESTING THE IGNITION COIL CONTROL CIRCUIT CONTINUITY*.

Removing the Ignition Coil

1. Unplug CAPS (camshaft position sensor).

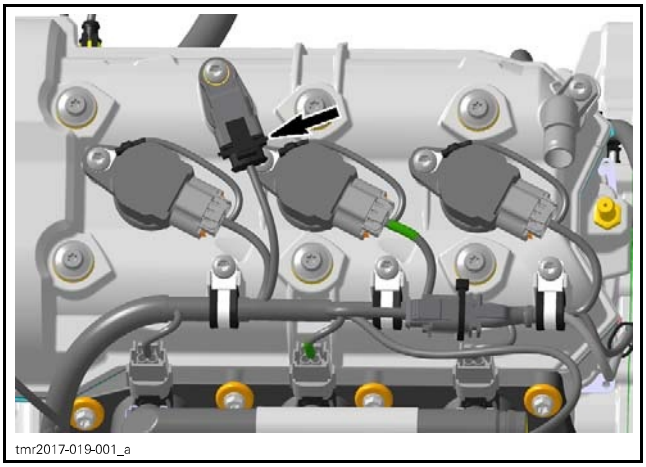

2. Remove:
   - Ignition coil retaining screws.
   - Ground connector.
3. Disconnect ignition coil connectors.

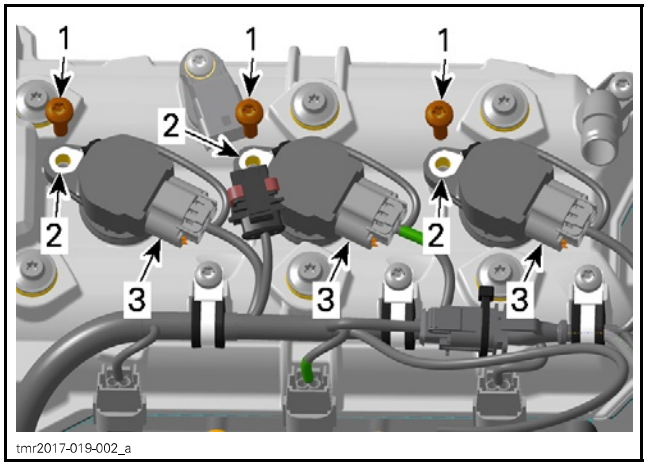

1. *Retaining screws*
2. *Ground connectors*
3. *Ignition coil connectors*

NOTICE Do not pry on ignition coil with a tool.

4. Remove ignition coils with gaskets from spark plug by rotating coil side to side as you pull up.

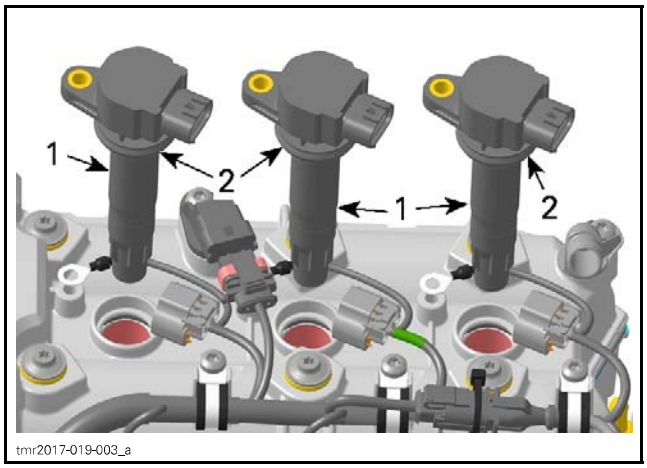

1. *Ignition coils*
2. *Gaskets*

Installing the Ignition Coil

Install the ignition coil on the spark plug.

Align the retaining screw hole of the ignition coil with the threaded hole on the valve cover.

Push the ignition coil all the way down until it rests on the valve cover.

Install and tighten retaining screw.

TIGHTENING TORQUE	
Ignition coil retaining screw	9 N•m ± 1 N•m (80 lbf•**in** ± 9 lbf•**in**)

Connect ignition coil connectors.

Reinstall all removed or disconnected components.

SPARK PLUGS

Removing the Spark Plugs

1. Remove ignition coils.
2. Using a spark plug socket, release the torque applied to the spark plug.

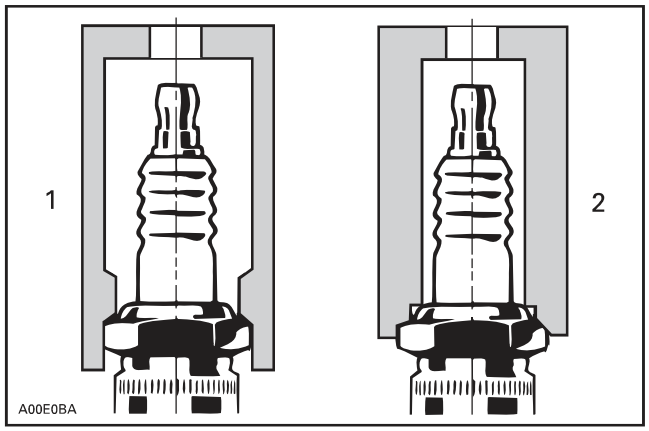

1. Approved socket
2. Improper socket

3. Clean the spark plug area with pressurized air.
4. Unscrew spark plug.
5. Use the ignition coil to take spark plug out of spark plug hole.

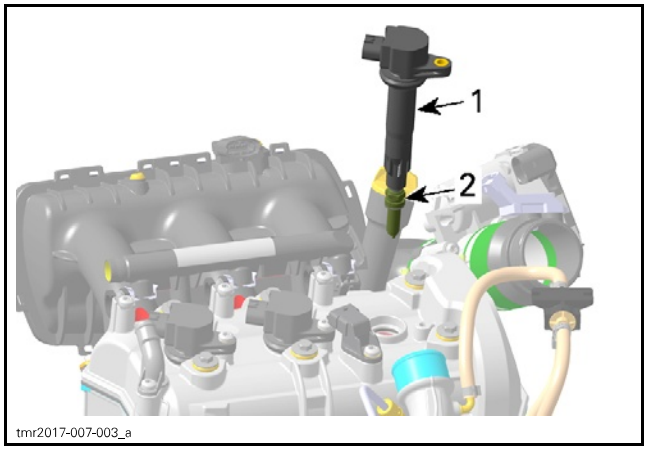

1. Ignition coil
2. Spark plug

Troubleshooting a Fouled Spark Plug

Fouling of the spark plug is indicated by irregular running or misfiring of the engine, decreased engine speed due to misfiring, reduced performance, and increased fuel consumption.

Other possible causes are: use of an incorrect or bad fuel, defective ignition system, incorrect spark plug gap, loss of compression, or lubricating oil entering the combustion chamber.

The plug face of a fouled spark plug has either a wet or dry black carbon deposit. Such coatings form a conductive connection between the center electrode and the ground electrode.

Spark Plug Analysis

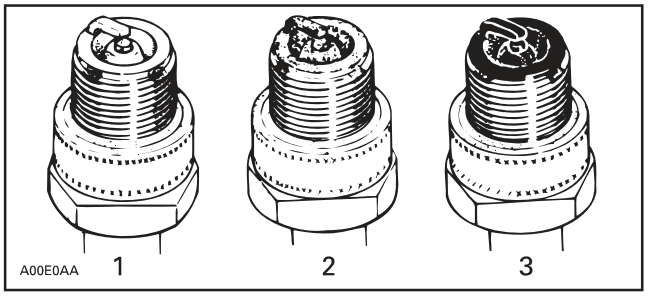

TYPICAL
1. Overheated (light gray, white)
2. Normal (light brown, brown)
3. Fouled (black, wet or dry, dark deposits, gray, melted coating)

The plug face reveals the condition of the engine, operating condition, method of driving and fuel mixture. For this reason it is advisable to inspect the spark plug at prescribed intervals, examining the plug face (i.e. the part of the plug projecting into the combustion chamber).

Installing the Spark Plug

Prior to installation make sure that contact surfaces of the cylinder head and spark plug are free of grime.

1. Using a wire feeler gauge, set electrode gap as specified in *TECHNICAL SPECIFICATIONS*.
2. Hand screw spark plug into cylinder head, then tighten with a torque wrench and an appropriate socket.

TIGHTENING TORQUE	
Service product	HEAT-SINK PASTE P12 (P/N 420 897 186)
Spark plug	11 N•m ± 1 N•m (97 lbf•**in** ± 9 lbf•**in**)

3. Install ignition coil.

IGNITION SYSTEM

SERVICE TOOLS

Description	Part Number	Page
D.E.S.S. POST REMOVER	529 035 943	3
FLUKE 115 MULTIMETER	529 035 868	3

GENERAL

⚠ WARNING

Torque wrench tightening specifications must be strictly adhered to.
Locking devices when removed (e.g.: locking tabs, elastic stop nuts, self-locking fasteners, cotter pins, etc.) must be replaced.

Hoses, cables or locking ties removed during a procedure must be reinstalled as per factory standards.

⚠ WARNING

Never check for engine ignition spark from an open coil and/or spark plug as spark may cause potential fuel vapors to ignite. Always use an approved spark tester.

SYSTEM DESCRIPTION

The ignition system is a digital inductive type (IDI) system.

Ignition system parameters such as ignition timing, spark duration, and firing order, as well as many other engine related functions are controlled by the engine management system (EMS) in order to meet engine operational requirements. The EMS can detect many abnormalities including a short circuit in the primary winding of the ignition coils as well as its associated circuits.

Three direct ignition coils receive power from the fuse F5.

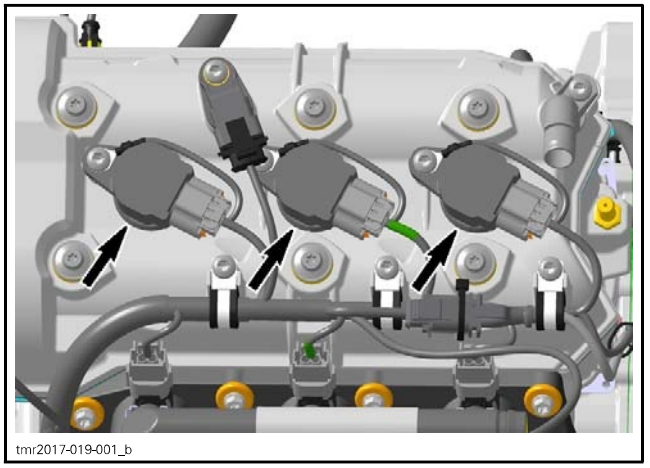

IGNITION COILS

When a ground signal is provided by the ECM to an ignition coil primary winding, a high voltage is induced in the coil secondary winding that is used to produce a spark at the spark plug electrode.

Cylinder 1 is located on the PTO side of the engine. Each cylinder is identified by a number on cylinder block housing.

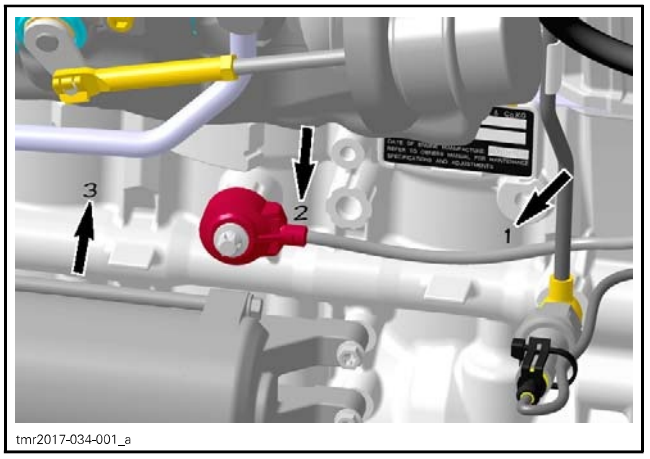

CYLINDER BLOCK - EXHAUST SIDE

Ignition Timing

Ignition timing is not adjustable.

The ECM is programmed with data (ignition mappings) that it uses to establish optimum ignition timing under all engine operating conditions.

It receives signals from a variety of sensors that it compares with the ignition mappings and uses it to control the ignition spark timing, duration and firing order.

The firing of each spark plug is independent of the others.

Engine RPM Limiter

The ECM will limit the maximum engine speed by cutting off ignition spark and fuel at a predetermined engine RPM.

ENGINE SPEED LIMITER SETTING	8300 RPM

Knock Sensor

A knock sensor is mounted on the cylinder block below the exhaust manifold. It detects specific vibrations that would typically be generated by engine detonation.

If detonation occurs, the knock sensor detects it and the ECM goes into a specific operating mode whereby it temporarily retards the ignition advance until detonation stops.

The ECM is able to identify in which cylinder the knocking occurs and modifies the ignition advance on that cylinder only.

Refer to the *ELECTRONIC FUEL INJECTION (EFI)* subsection for testing and replacement procedures.

TROUBLESHOOTING

It is good practice to check for fault codes using the BUDS2 as a first troubleshooting step. Refer to *DIAGNOSTIC AND FAULT CODES* subsection.

Refer to *POWER DISTRIBUTION* for fuses and relay information.

Always refer to the *WIRING DIAGRAM* when troubleshooting an electrical circuit.

IGNITION SYSTEM TESTING

The ECM controls the ignition system.

If a fault is detected by the ECM, the check engine light will turn on.

The ECM can detect a problem on the primary winding or circuit of the ignition coils.

The secondary winding of the ignition coils is not monitored by the ECM.

Other sensors in relation with the ignition system are also monitored by the ECM.

Testing Ignition System

Check for fault codes using BUDS2 software as a first troubleshooting step. Refer to *DIAGNOSTIC SYSTEM AND FAULT CODES* subsection.

Ensure fuse F5 and relay are powered and in good condition.

If a fuse is burnt, test for a short circuit or faulty component on that fuse circuit before replacing the fuse.

Check ignition spark, refer to *QUICK TESTING THE IGNITION COIL USING B.U.D.S.* in this subsection.

DIAGNOSTIC GUIDELINES

The following is provided to help in diagnosing the probable cause of a problem. It is a guideline and should not be assumed to list all possible causes.

ENGINE WILL NOT STOP WHEN REMOVING KEY FROM D.E.S.S. POST

1. Defective D.E.S.S. post
   - *Check D.E.S.S. post. Replace if necessary.*

ENGINE WILL NOT START (ENGINE TURNS OVER)

1. Fouled or defective spark plug
   - *Check spark plug condition. Replace if necessary.*
2. Defective CPS
   - *Test CPS, refer to ELECTRONIC FUEL INJECTION (EFI) subsection.*
3. Defective trigger wheel
   - *Check. Refer to MAGNETO AND STARTER subsection.*
4. Defective ignition circuit
   - *Check fuses, ignition coils, wiring and connectors.*

ENGINE HARD TO START

1. Faulty, fouled or worn out spark plug
   - *Check spark plug condition. Replace if necessary.*
2. Drowned engine
   - *Check engine temperature value using B.U.D.S.2 measurements page. If the temperature read is lower than the ambient temperature, CTS sensor may be defective or have a bad connection. Therefore, the ECM would erroneously set the engine in cold start mode and it could flood the spark plugs.*

ENGINE MISFIRES, RUNS IRREGULARLY

1. Fouled, defective, worn spark plugs
   - *Check spark plug condition. Replace if necessary.*
2. Damaged trigger wheel/loose CPS
   - *Check. Refer to MAGNETO AND STARTER subsection.*
3. Defective ignition circuit
   - *Check fuses, ignition coils, wiring and connectors.*
4. Poor engine grounds
   - *Check ground condition, refer to POWER DISTRIBUTION AND GROUNDS subsection.*

ENGINE CONTINUALLY BACKFIRES

1. Fouled, defective spark plugs
   - *Check spark plug condition. Replace if necessary.*
2. Damaged trigger wheel/defective or loose CPS
   - *Check, refer to MAGNETO AND STARTER and ELECTRONIC FUEL INJECTION (EFI) subsections.*

ENGINE DETONATION OR PINGING

1. Faulty or disconnected knock sensor
   - *Check, refer to ELECTRONIC FUEL INJECTION (EFI) subsection.*

ENGINE LACKS ACCELERATION OR POWER

1. Weak spark
   - *Check spark plugs, coils, wiring and connections.*

PROCEDURES

D.E.S.S. POST

Testing Continuity of D.E.S.S. post

REQUIRED TOOLS
FLUKE 115 MULTIMETER (P/N 529 035 868)

Refer to *RADIO FREQUENCY DIGITALLY ENCODED SECURITY SYSTEM (RF D.E.S.S.)* subsection.

Replacing the D.E.S.S. post

REQUIRED TOOL
D.E.S.S. POST REMOVER (P/N 529 035 943)

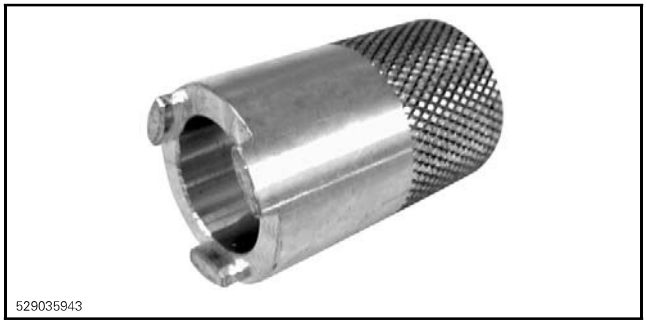

START/STOP BUTTON

Start/stop Button Wire Identification

FUNCTION	PIN	COLOR
12 volt input from F8	1	BE/WH
12 volt output to ECM-B pin D1	2	BK/YE

Start/Stop Button Test with BUDS2

Connect to BUDS2 software. Refer to *COMMUNICATION TOOLS* section.

Select the **Measurements** and **ECM** tabs.

Press the vehicle's start button and look at the **Start Button** LED.

It should turn on, indicating the start signal reaches the ECM.

If it does not turn on, check the start button and wiring.

Start/Stop Button Resistance Test

Disconnect start/stop button connector.

Using the FLUKE 115 MULTIMETER (P/N 529 035 868), measure resistance as per the following table.

POSITION	START BUTTON CONNECTOR PIN		RESISTANCE
Switch released	1	2	Infinite (OL)
Switch depressed and held			0.6 Ω max.

Replace start/stop button if defective.

CHARGING SYSTEM

SERVICE TOOLS – OTHER SUPPLIER

Description	Part Number	Page
EXTECH INDUCTIVE AMMETER	380941	2
NAPA ULTRA PRO BATTERY LOAD TESTER	95260	2–4

GENERAL

SYSTEM DESCRIPTION

The purpose of the charging system is to keep the battery at a full state of charge and to provide the electrical system with the required electrical power for normal vehicle operation.

Magneto

The magneto is the primary source of electrical energy. It transforms magnetic field into electric current (AC).

The magneto has a 3 phase series stator.

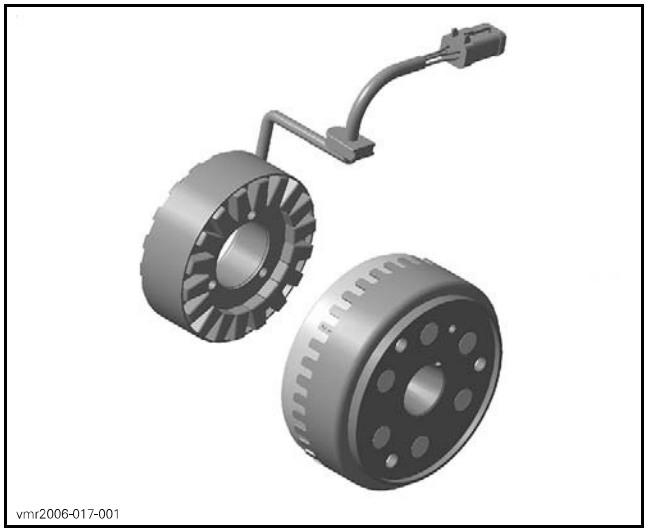

TYPICAL

Voltage Regulator/Rectifier

The rectifier receives AC current from the magneto and transforms it into direct current (DC).

The voltage regulator, included in the same unit, limits voltage to prevent any damage to electrical components.

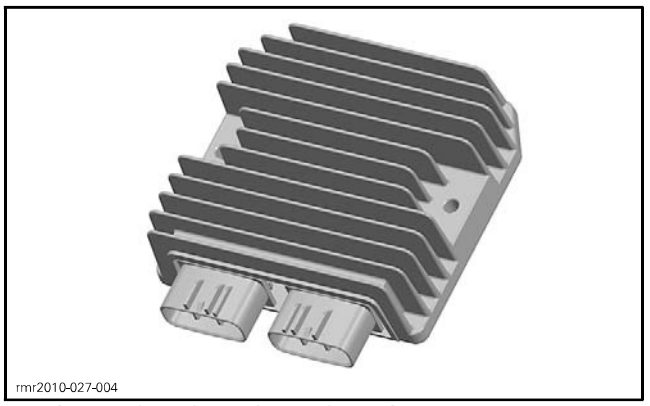

TYPICAL – VOLTAGE REGULATOR/RECTIFIER

Battery

The battery supplies DC power to the electric starter for cranking the engine. During engine starting, it also supplies DC power to the entire electrical system.

At low engine RPM operation and high current load conditions, it supplements the magneto output and helps to maintain a steady system voltage.

INSPECTION

CHARGING SYSTEM OUTPUT

First ensure that battery is in good condition prior to performing the following tests.

Testing the Output Voltage.

1. Connect to BUDS2. Refer to *COMMUNICATION TOOLS* subsection.
2. Select the **Measurements**.
3. Start engine.
4. Increase engine RPM as specified in the following table and read voltage in the **ECM Input Voltage** box.

OUTPUT VOLTAGE TEST USING BUDS2	
ENGINE SPEED	VOLTAGE (DC)
4000 RPM	14.8 ± .4 Vdc

If voltage is above specification, replace voltage regulator/rectifier.

If voltage is below specification, check stator output and wiring harness prior to concluding that voltage regulator/rectifier is defective. Refer to *MAGNETO SYSTEM* subsection.

TROUBLESHOOTING

It is good practice to check for fault codes using the BUDS2 software as a first troubleshooting step. Refer to *DIAGNOSTIC SYSTEM AND FAULT CODES* subsection.

BATTERY REGULARLY DISCHARGED OR WEAK

1. Loose or corroded battery cables connections.
   - *Tighten or repair battery cables connections.*
2. Worn or defective battery.
   - *Charge and test battery.*
3. Defective magneto stator.
   - *Test stator.*
4. Defective regulator/rectifier.
   - *Test system voltage.*
5. Damaged magneto rotor or Woodruff key.
   - *Replace magneto rotor or Woodruff key.*

PROCEDURES

LOAD TESTING THE BATTERY

1. Connect a battery load tester such as the NAPA ULTRA PRO BATTERY LOAD TESTER (P/N 95260).
2. Ensure proper test conditions.

TEST CONDITIONS	
Initial battery voltage‡	Above 12.5 Vdc
Engine	OFF
Load	3 times the amp-hour (AH) rating
Time	15 seconds
‡ Required for accurate testing	

SPECIFICATION	
Battery	Above 9.6 Vdc

If battery voltage drops below specification during test, replace battery and perform a *CHARGING SYSTEM LOAD TEST*.

LOAD TESTING THE CHARGING SYSTEM

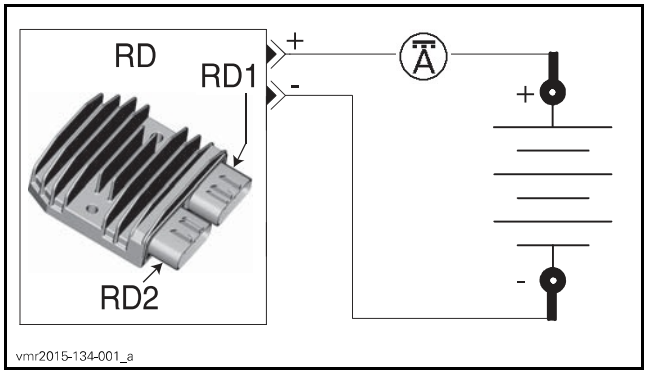

1. Connect a battery load tester such as the NAPA ULTRA PRO BATTERY LOAD TESTER (P/N 95260).
2. Start vehicle and read voltage on tester.

SPECIFICATION	
Voltage	12.5 - 15 Vdc

If voltage is **above** specification, replace regulator and continue *CHARGING SYSTEM LOAD TEST*.

3. Connect an ammeter such as EXTECH INDUCTIVE AMMETER (P/N 380941) around RD1-1 wire.

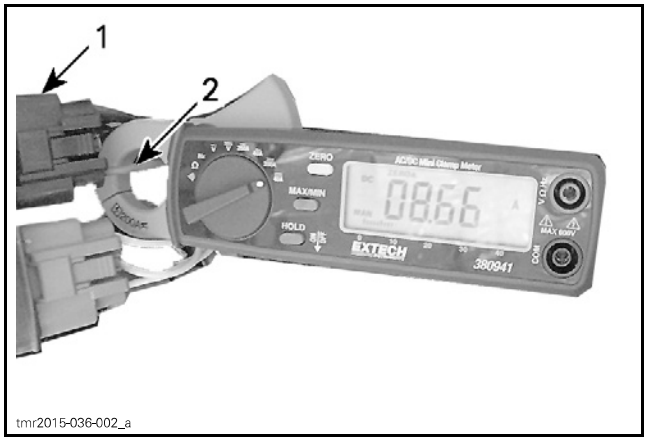

DC CURRENT TEST WITH INDUCTIVE AMMETER
1. *Output connector of voltage regulator*
2. *Ammeter clamped over RED wire*

4. Ensure proper test conditions.

TEST CONDITIONS	
Battery voltage at idle‡	Above 12.6 Vdc
Engine	Increase to 4000 RPM
Load	As required to decrease battery voltage to 12 Vdc
Time	15 seconds
‡ Required for accurate testing	

5. Read amperage on ammeter.

MODEL	SPECIFICATION
All models	50 ± 5 Amps

NOTE: With a fully charged battery and no electrical loads, specification is less than 10A.

If amperage or voltage is not within specification, verify magneto and wires. Refer to *MAGNETO AND STARTER* subsection. Replace:

– Voltage regulator if magneto test is within specifications.
– Magneto if magneto test is not within specifications.

VOLTAGE REGULATOR (RD)

Voltage Regulator Continuity Test

Due to internal circuitry, there is no static test available.

Accessing the Voltage Regulator

The voltage regulator is located on the RH side,in front of the engine.

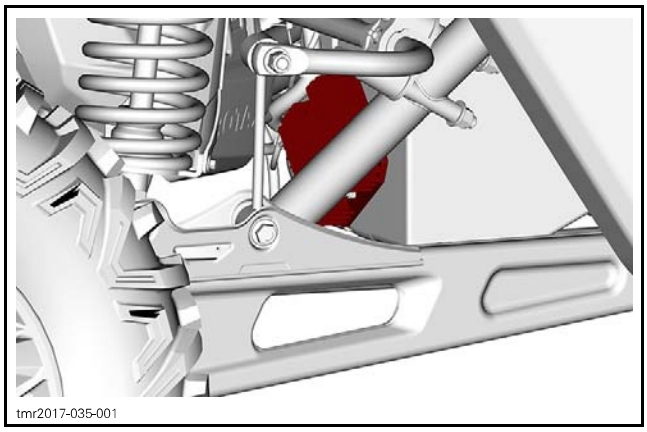

Voltage Regulator Wire Identification

FUNCTION	PIN	COLOR
12 Vdc output	RD1-1	RD
12 Vdc ground	RD1-3	BK
12 Vac input	RD2-1	YE
12 Vac input	RD2-2	YE
12 Vac input	RD2-3	YE

Voltage Regulator Power Test

1. Check voltage at RD1-1.

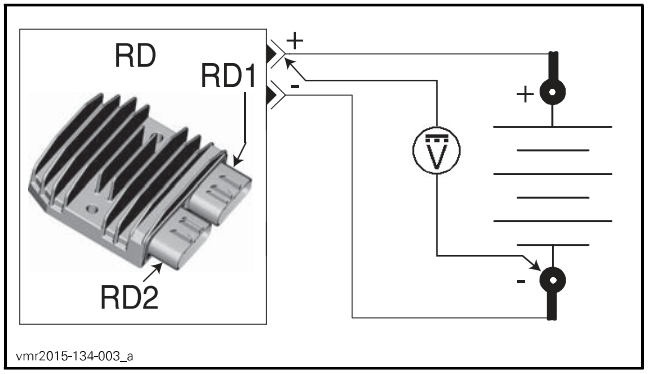

TEST CONDITIONS	
RD1-1	Hot at all times

BACKPROBE	PROBE	SPECIFICATION
RD1-1	BAT2 (-)	Battery voltage

2. Connect a battery load tester such as the NAPA ULTRA PRO BATTERY LOAD TESTER (P/N 95260).
3. Start vehicle.
4. Ensure proper test conditions.

TEST CONDITIONS	
Battery voltage at idle‡	Above 12.6 Vdc
Engine	Increase to 4000 RPM
Load	As required to decrease battery voltage to 12 Vdc
Time	15 seconds
‡ Required for accurate testing	

5. Measure voltage drop.

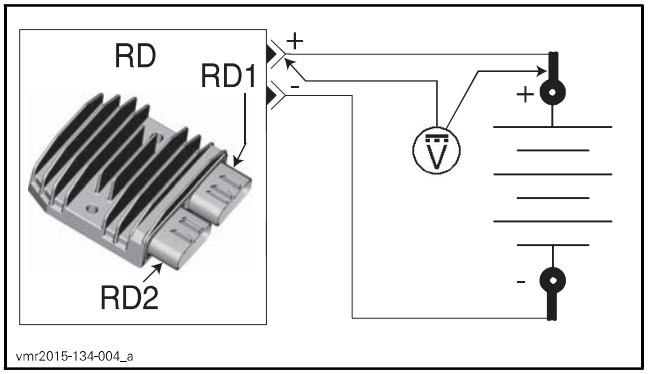

BACKPROBE	PROBE	SPECIFICATION
RD1-1	BAT1 (+)	Under 0.2 Vdc

If voltage drop is above specification, locate and repair damaged connector/wire.

Voltage Regulator Ground Test

1. Check ground at RD1-3.

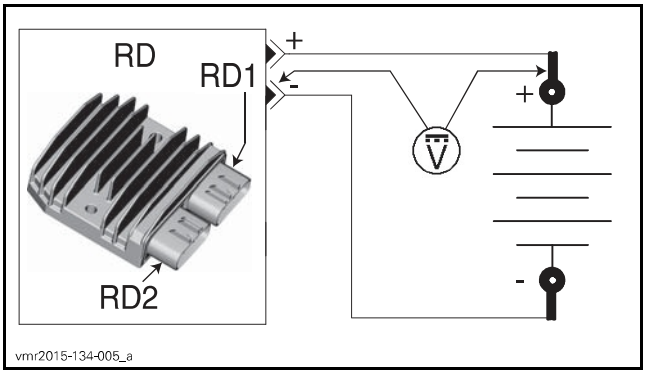

vmr2015-134-005_a

TEST CONDITIONS	
RD1-3	Permanent ground

BACKPROBE	PROBE	SPECIFICATION
RD1-3	BAT1 (+)	Battery voltage

2. Connect a battery load tester such as the NAPA ULTRA PRO BATTERY LOAD TESTER (P/N 95260).
3. Start vehicle.
4. Ensure proper test conditions.

TEST CONDITIONS	
Battery voltage at idle‡	Above 12.6 Vdc
Engine	Increase to 4000 RPM
Load	As required to decrease battery voltage to 12 Vdc
Time	15 seconds
‡ Required for accurate testing	

5. Measure voltage drop.

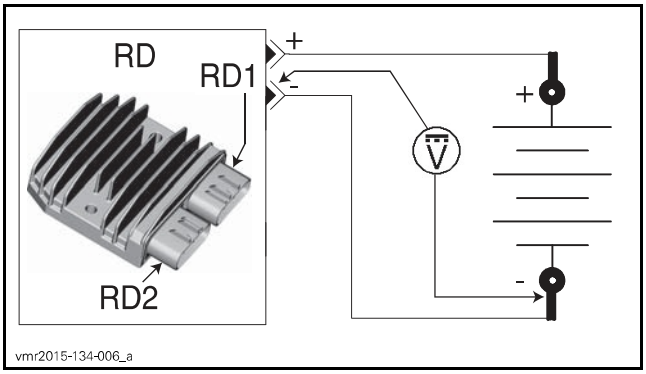

vmr2015-134-006_a

BACKPROBE	PROBE	SPECIFICATION
RD1-3	BAT2 (-)	Under 0.4 Vdc

If voltage drop is above specification, locate and repair damaged connector/wire.

BATTERY

Battery Information

These vehicles are equipped with a VRLA battery (Valve Regulated Lead Acid). **It is a maintenance-free type battery.**

Refer to battery manufacturer's instructions for proper filling, activation and routine charging procedures.

Accessing the Battery

The battery is located on the RH side, behind the passenger seat.

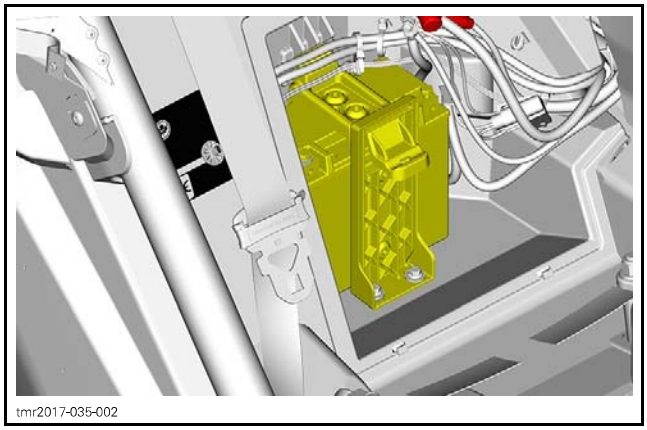
tmr2017-035-002

Removing the Battery

1. Disconnect BLACK (-) cable first, then the RED (+) cable.

NOTICE **Always respect this order for removal; disconnect BLACK (-) cable first.**

2. Remove battery holder retaining screws.
3. Remove battery holder.
4. Remove battery.

Cleaning the Battery

Clean the battery rack, cables and battery posts using a solution of baking soda and water.

Remove corrosion (if so) from battery cable terminals and battery posts using a firm wire brush. Rinse with clear water and dry well.

Inspecting the Battery

Visually inspect battery casing for cracks or any other damages. If casing is damaged, replace battery and thoroughly clean battery support with a water and baking soda solution.

Inspect condition of battery posts, battery support, holding strap and strap attachment points and wire terminal lugs.

Battery Storage

It is not necessary to remove the battery during vehicle storage but it is recommended for long term storage.

If the battery is left in the vehicle during storage or used infrequently, disconnect the BLACK (-) negative battery cable to eliminate battery current drain from the electrical equipment.

Recharge the battery once a month with an approved battery charger as per manufacturer's recommendations.

Clean battery, battery support and connections as required, refer to *BATTERY CLEANING* in this section.

For other recommendations during storage, refer to battery manufacturers instructions.

⚠ WARNING

Ensure battery is stored in a safe place, out of reach for children.

Activating a New Battery

Refer to the instructions provided with the battery.

Charging the Battery

⚠ WARNING

Always wear safety glasses and charge in a well ventilated area. Never charge or boost a battery while it is installed on vehicle. Do not open the sealed cap during charging. Do not place battery near open flame.

NOTICE **If battery becomes hot, stop charging and allow it to cool before continuing.**

NOTE: Sealed VRLA batteries have an internal safety valve. If battery pressure increases due to overcharging, the valve opens to release excess pressure, preventing battery damage.

An automatic charger is a fast and convenient way for error-proof charging.

Always follow the battery manufacturer's charging instructions.

When using a constant current charger, charge battery according to the chart below.

Battery Voltage Below 12.8 V and Above 11.5 V

STANDARD CHARGING (RECOMMENDED)		
BATTERY TYPE	TIME	CHARGE
YTX20L-BS	4 - 9 HOURS	2 A

QUICK CHARGING		
BATTERY TYPE	TIME	CHARGE
YTX20L-BS	50 MINUTES	10 A

Installing the Battery

NOTICE **Always connect RED (+) cable first then BLACK (-) cable.**

Installation is the reverse of removal procedure, however pay attention to the following:

– Tighten battery holder retaining nut to specification.

TIGHTENING TORQUE	
Battery holder retaining nut	5 N•m ± 1 N•m (44 lbf•**in** ± 9 lbf•**in**)

STARTING SYSTEM

SERVICE TOOLS

Description	Part Number	Page
ECM ADAPTER TOOL	529 036 166	4
FLUKE 115 MULTIMETER	529 035 868	2

GENERAL

SYSTEM DESCRIPTION

The starting system is composed of an electric starter supplied in current by the battery through a solenoid.

The starter solenoid receives a 12 volt input from the ignition switch and the ground signal is provided by the ECM when the following engine cranking conditions are met.

– Ignition switch ON.
– Transmission in Park or Neutral position and/or brake pedal held.
– Start button held.

NOTE: If the ignition switch is left ON for more than 15 minutes, engine will not start unless ignition switch is turned OFF, then ON again.

TROUBLESHOOTING

It is good practice to check for fault codes using the BUDS2 software as a first troubleshooting step. Refer to *DIAGNOSTIC AND FAULT CODES* subsection.

NOTE: Clear any fault code after solving a problem.

Always refer to the *WIRING DIAGRAM* when troubleshooting an electrical circuit.

Refer to *POWER DISTRIBUTION* for fuse and relay information.

Check all connections, cables and wires. Tighten any loose connections. Replace any chafed or corroded wires/cables.

DIAGNOSTIC GUIDELINES

FUSE 8 IN FUSE BOX 1 BURNS WHILE ATTEMPTING TO CRANK ENGINE

1. Defective D2 Diode
   - *Test diode, see procedure in this subsection.*
2. Defective starter solenoid
   - *Test starter solenoid, see procedure in this subsection.*
3. Wiring short to ground
   - *Check wiring.*

ENGINE DOES NOT CRANK AND GAUGE DOES NOT TURN ON

1. Burnt main fuse (F4) in fuse box 1
   - *Check fuse.*
2. Burnt fuse F8 in fuse box 1
   - *Check fuse.*
3. Defective or discharged battery
   - *Test battery, refer to CHARGING SYSTEM.*
4. Defective ignition switch or circuit
   - *Check ignition switch, refer to IGNITION SYSTEM.*

ENGINE DOES NOT CRANK BUT GAUGE TURNS ON

1. Defective brake switch
   - *Check brake switch, refer to BRAKES subsection.*
2. Defective gearbox position sensor (GPBS)
   - *Check GPBS, refer to GEARBOX AND 4X4 COUPLING UNIT subsection.*
3. Defective start button or circuit
   - *Test start button, see procedure in this subsection.*
4. Defective starter solenoid or circuit
   - *Test starter solenoid, see procedure in this subsection.*
5. Defective starter motor
   - *Check starter motor, refer to MAGNETO AND STARTER subsection.*

PROCEDURES

START BUTTON

Start Button Wire Identification

FUNCTION	PIN	COLOR
12 volt input from fuse F8	1	BE/WH
12 volt output to ECM-B pin D1	2	BK/YL

Testing the Start Button with BUDS2

Connect to BUDS2 software. Refer to *COMMUNICATION TOOLS* section.

Select the **Measurements** and **ECM** tabs.

Press the vehicle's start button and look at the **Start Button** LED.



lmr2005-056-005_en

It should turn on, indicating the start signal reaches the ECM.

If it does not turn on, check the start button and wiring.

Start Button Resistance Test

Disconnect start button connector.

Using the FLUKE 115 MULTIMETER (P/N 529 035 868), measure resistance as per the following table.

POSITION	START BUTTON CONNECTOR PIN		RESISTANCE
Switch released	1	2	Infinite (OL)
Switch depressed and held			0.6 Ω max.

Replace start button if defective.

STARTER SOLENOID

Starter Solenoid Access

The starter solenoid is located on the RH side, behind the passenger seat.

Starter Solenoid Wire Identification

FUNCTION	PIN	WIRE COLOR
12 volt input from ignition switch	SS1	BK/YE
Ground from ECM-B pin L4	SS2	OG/BN

Testing the Starter Solenoid Operation

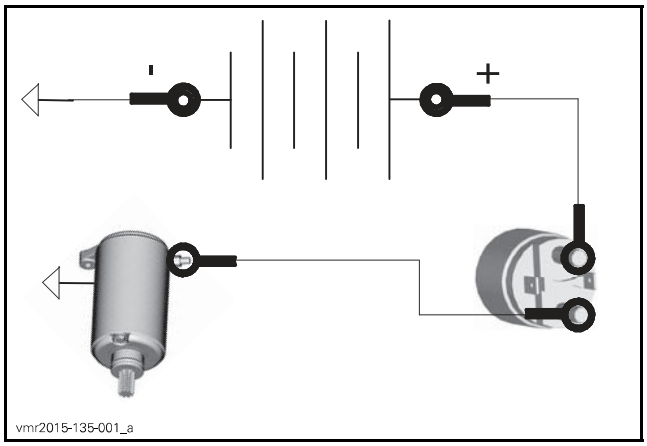

vmr2015-135-001_a

1. Disconnect connector

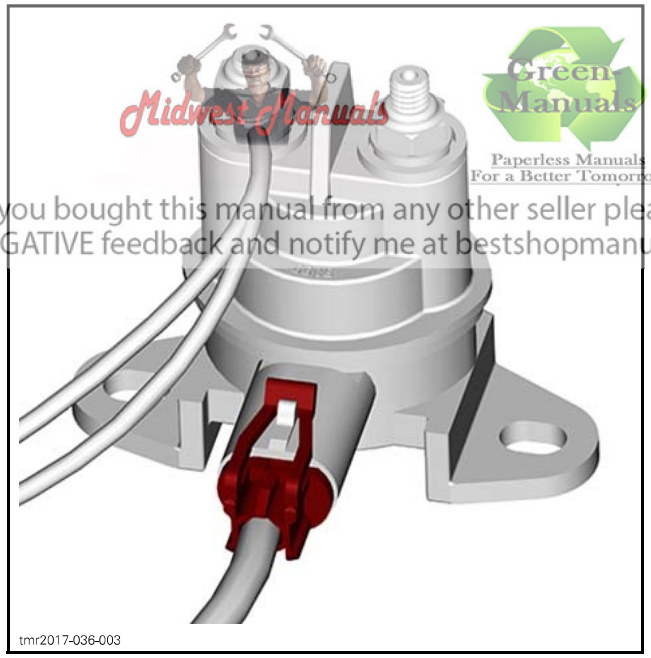
tmr2017-036-003

2. Activate the starter solenoid.
   2.1 Apply 12Vdc to SS1
   2.2 Ground SS2.

Midwest Manuals
Green Manuals
Paperless Manuals For a Better Tomorrow
If you bought this manual from any other seller please leave them NEGATIVE feedback and notify me at bestshopmanuals@gmail.com

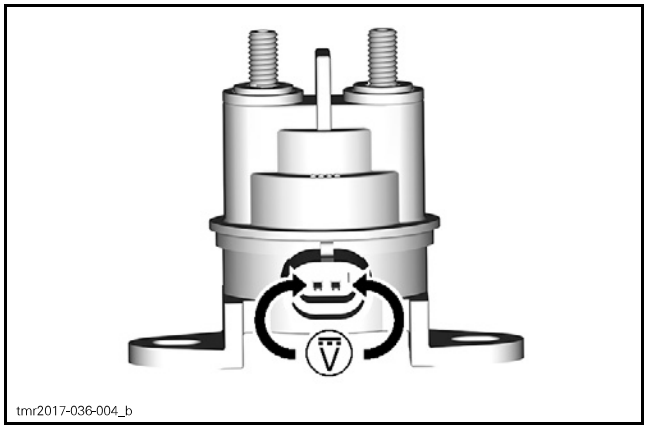

SS1 IS THE LEFT

If starter runs, carry out the *TESTING THE STARTER SOLENOID INPUT VOLTAGE*.

If starter does not run, carry out the *TESTING THE STARTER SOLENOID WINDING RESISTANCE*.

Testing the Starter Solenoid Input Voltage

1. Disconnect connector.

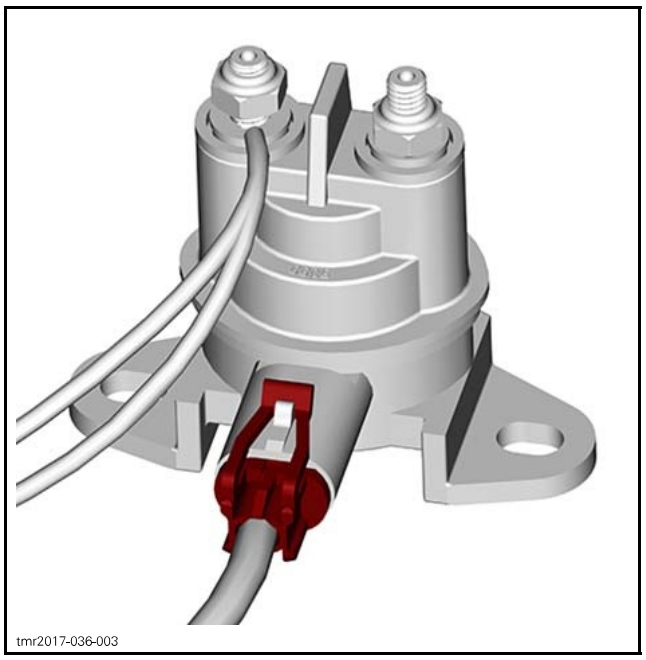

2. Turn ignition switch ON.
3. Measure voltage as per following table.

STARTER SOLENOID INPUT VOLTAGE TEST		
TEST PROBES		RESULT (START BUTTON RELEASED)
BK/YE wire	Battery ground	Battery voltage

Testing the Starter Solenoid Ground Signal

1. Disconnect connector.

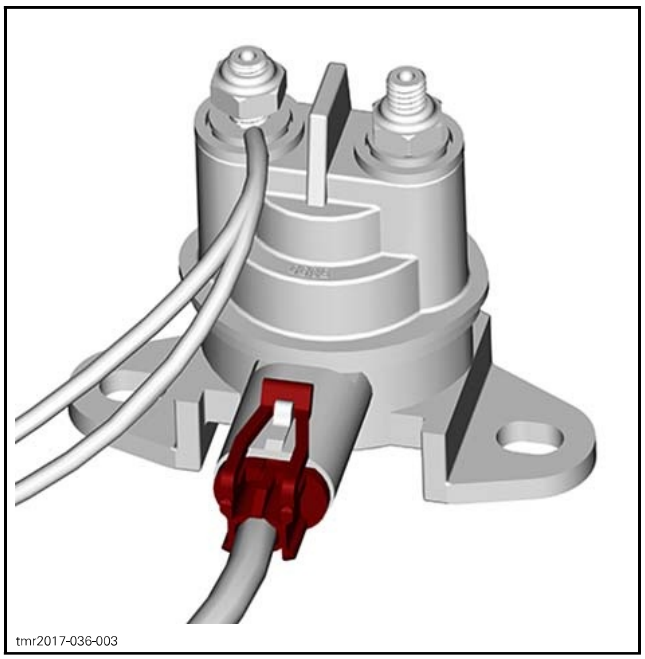

2. Turn ignition switch ON.
3. Measure voltage as per following table.

STARTER SOLENOID GROUND SIGNAL TEST		
TEST PROBES		RESULT (START BUTTON DEPRESSED)
OG/BN wire	Battery positive post	Battery voltage

Testing the Starter Solenoid Winding Resistance

Disconnect terminals from solenoid.

With a multimeter, check primary winding resistance as follows.

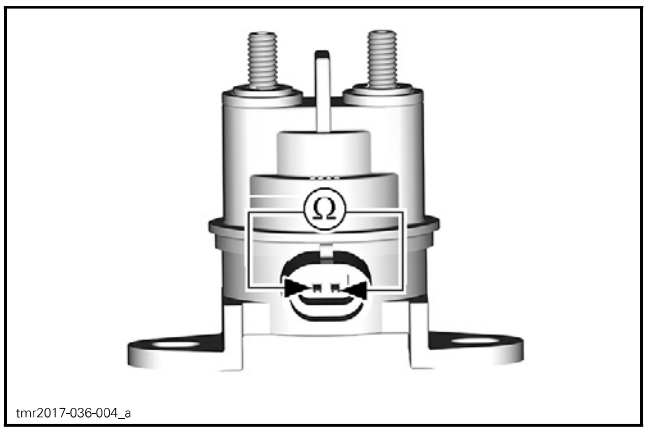

STARTER SOLENOID WINDING RESISTANCE TEST		
TEST PROBES		RESULT @ 20°C (68°F)
Starter solenoid SS1 pin	Starter solenoid SS2 pin	Approximately 5 Ω

If measurement is out of specification, replace solenoid.

Testing the Starter Solenoid Voltage Drop

Turn ignition key ON.

Measure voltage as per following table while cranking engine in **drowned mode** (to prevent engine starting).

NOTE: For drowned mode, refer to *ENGINE MANAGEMENT* subsection.

STARTER SOLENOID VOLTAGE DROP TEST		
TEST PROBES		RESULT (WHILE CRANKING)
Post coming from battery	Post going to starter	0.2 Vdc max.

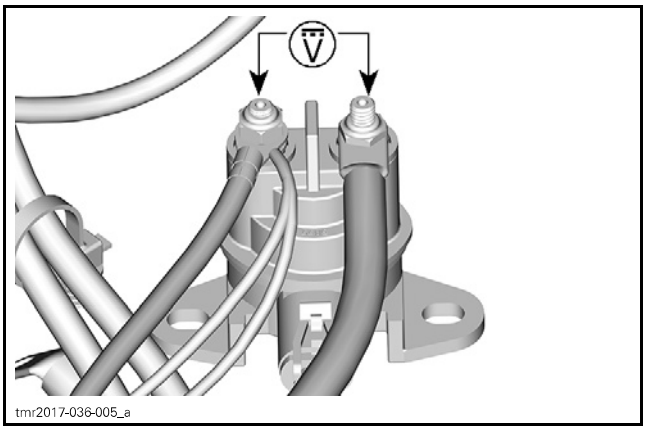

If voltage is out of specification, replace solenoid.

D2 DIODE (STARTER SOLENOID)

Diode Location

The diode is located in the main harness, near starter solenoid.

Testing the Diode

1. Make sure ignition switch is OFF.
2. Disconnect solenoid connector.

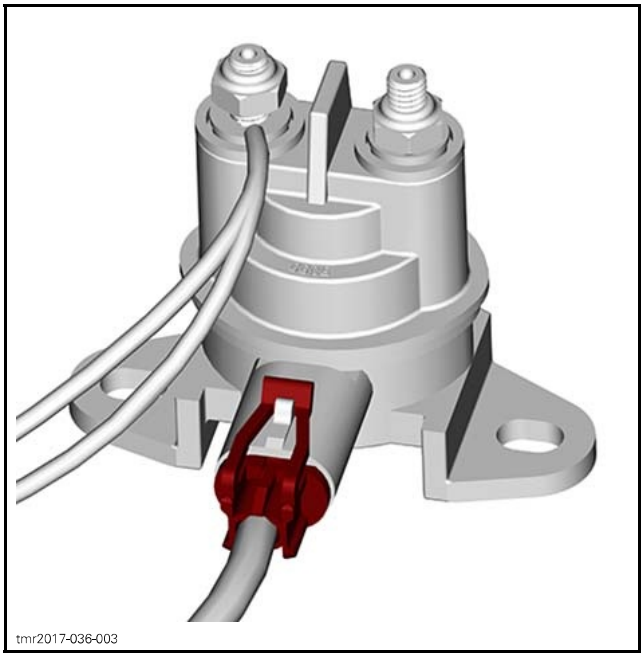

3. Disconnect ECM connector B.
4. Connect ECM ADAPTER TOOL (P/N 529 036 166) to the ECM connector B.



5. Set multimeter to "diode check".

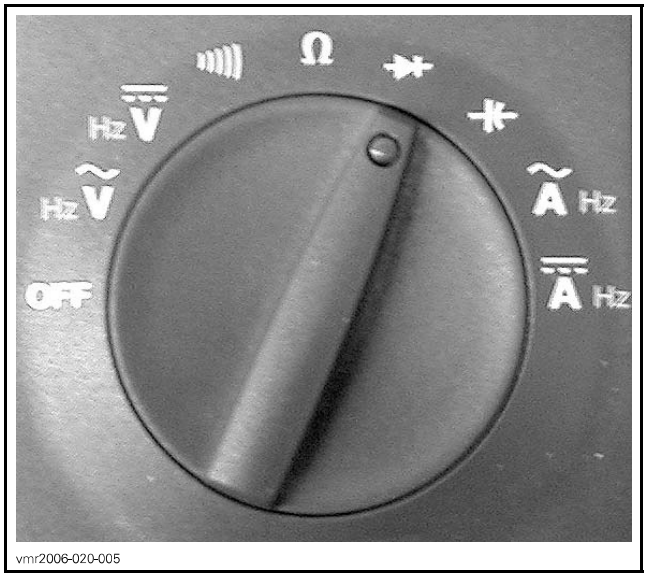

6. Test diode as per following table.

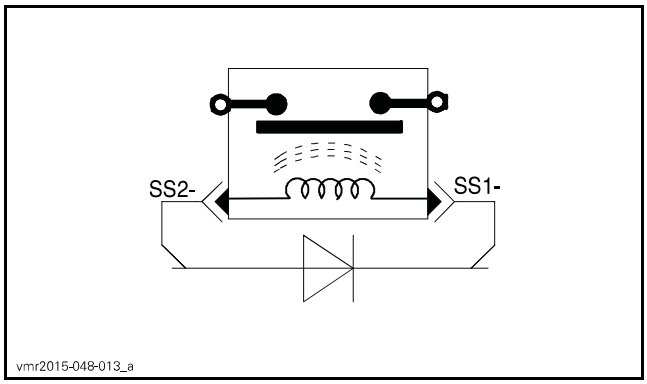

D2 DIODE TEST		
MULTIMETER POSITIVE PROBE	MULTIMETER NEGATIVE PROBE	RESULT
ECM-B pin D1	ECM-B pin L4	Overload (open)
ECM-B pin L4	ECM-B pin D1	Approximately 0.5 volts

If diode fail any test, replace it.

RADIO FREQUENCY DIGITALLY ENCODED SECURITY SYSTEM (RF D.E.S.S.)

GENERAL

SYSTEM DESCRIPTION

This system limits engine or vehicle speed.

At startup the D.E.S.S. module attempts to read the key and sends a signal to the ECM. The ECM analyses the signal and determines if the key is:

– Performance
– Learning

SPEED/TORQUE LIMITED TO		
KEY	LIMIT	HOW
Performance	No D.E.S.S. imposed limit	Not applicable
Learning[1]	Vehicle speed limited to 70 km/h (43 MPH)	By varying throttle opening (iTC)
DESS key not recognized / Bad Key[2]	Engine will not start	ECM will not ground starter solenoid
[1] Two different speeds can be set. Refer to *D.E.S.S. KEY PROGRAMMING* in this subsection		
[2] BUDS2 will display an error when trying to read key. Messages will scroll on gauge.		

NOTE: Additional information on learning key modes and how an operator can modify engine torque and vehicle speed is available in the *OPERATOR'S GUIDE*.

RF D.E.S.S. KEY

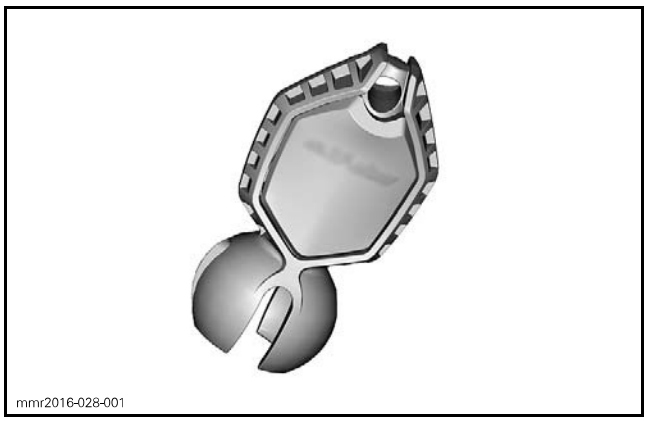
mmr2016-028-001

The D.E.S.S. key contains a magnet and a RFID chip.

– The magnet closes the hall effect switch inside the engine cut-off switch.
– The RFID chip contains a unique digital code. It is the equivalent of the tooth-pattern cut on a conventional ignition key.

D.E.S.S. keys may be programmed in the ECM memory using the BUDS2 The keys can also be erased individually.

NOTE: If desired, a D.E.S.S. key can be used on another vehicle equipped with the D.E.S.S. system. It only needs to be programmed for that vehicle.

RF D.E.S.S. MODULE / CUT-OFF SWITCH / D.E.S.S. POST

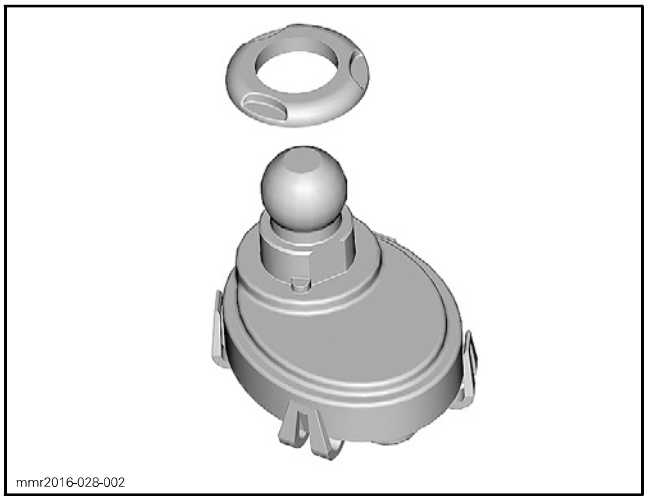
mmr2016-028-002

The hall effect switch (cut off switch) must be closed to start the engine.

The RF D.E.S.S. module emits an RF signal when the vehicle is powered up that activates the chip in the key, the module can then read the key.

The D.E.S.S. module does not determine the type of key, it only reads the chip for the ECM.

TROUBLESHOOTING

When starting the engine with a D.E.S.S. key on the engine cut-off switch, the key is identified by the ECM and D.E.S.S. signals will be issued according to the key recognition. See table.

D.E.S.S. SIGNAL		DESCRIPTION	COMMENT
BEEPER	DISPLAYED MESSAGE		
2 shorts beeps	Can-Am	Welcome message, good key	Working D.E.S.S. key.
Short beeps repeating slowly	CHECK KEY	Unable to read key	– Make sure no accessory or accessory wires are near key or engine cut-off switch. – RPM limited to 2500. Vehicle cannot be driven – Check D.E.S.S. status in BUDS2 – No voltage at RFID connector pin D
Shorts beeps repeating rapidly	BAD KEY	Invalid key or key not programmed	– Use the proper key for this vehicle or have the key programmed. – RPM limited to 2500, Vehicle can not be driven.

PROCEDURES

D.E.S.S. KEY

D.E.S.S. Key Programming

Use BUDS2.

Go to Keys page..

Refer to the **B.U.D.S. directory** on *KNOWLEDGE CENTER* for all BUDS related information, including:

– Current version download link
– User manual (programming keys, reading fault codes, writing data to modules etc.)
– Installation instructions
– Navigation through menus
– BRP BUDS chart

Search keyword: "BUDS".



D.E.S.S. / ENGINE CUT-OFF OPERATION

USE BUDS2 to identify, program, and erase keys.

Install D.E.S.S. key on D.E.S.S. post.

Press the start/stop switch to wake up vehicle.

From the *KEYS* page in BUDS2, click **Read**.

Normal Operation

BUDS2 can read and recognize key type.

Vehicle starts.

Refer to *WIRING DIAGRAM*.

RFID CONNECTOR PIN	SPECIFICATIONS (DISCONNECTED RFID CONNECTOR) ECM AWAKE (PUSH START/STOP BUTTON)
A	Ground thru ECM
B	3.3 Vdc
C	0 Vdc (data signal to ECM)
D	12 Vdc

Key Not Recognized

The gauge scrolls the message: "Key not recognized".

Possible causes:

– Damaged RFID chip
– No signal at RFID-C to ECM

Condition can be duplicated with a magnet on the D.E.S.S. post.

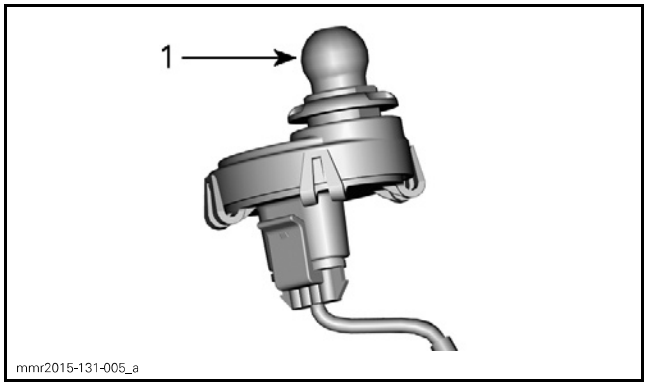

1. D.E.S.S. post

Bad Key

The gauge scrolls the message: "Bad key".

Possible causes:

– Key not programmed to vehicle

Condition can be duplicated by installing a key that is not programmed to the vehicle.

Gauge and Vehicle Won't Stay Awake

The gauge powers off shortly after the start/stop button is pressed.

Possible causes:

– No key on D.E.S.S. post.
– Magnet in key not closing hall effect switch in D.E.S.S. post.
– No voltage at RFID-D connector
– No voltage at RFID-B connector
– No ground at RFID-A connector

Condition can be duplicated by unplugging the RFID connector.

LIGHTS

SERVICE PRODUCTS

Description	Part Number	Page
DIELECTRIC GREASE	293 550 004	1

GENERAL

NOTICE It is recommended to always disconnect the battery when replacing any electric or electronic parts. Always disconnect battery exactly in the specified order, BLACK (-) cable first.

TROUBLESHOOTING

DIAGNOSTIC TIPS

NOTE: It is a good practice to check for fault codes using BUDS2 software as a first troubleshooting step. Refer to *COMMUNICATION TOOLS* subsection.

IMPORTANT: When troubleshooting an electrical system fault, check battery condition, cables and connections first.

Circuit Testing

Check the related-circuit fuse condition with a fuse tester or test lamp (a visual inspection could lead to a wrong conclusion).

NOTE: If the ignition switch is left ON for more than 30 minutes, the accessory relay will shut down.

Inspecting the Electrical Connection

When replacing an electric or electronic component, always check electrical connections. Make sure they are tight, make good contact, and are corrosion-free. Dirty, loose or corroded contacts are poor conductors and are often the source of a system or component malfunction.

Pay particular attention to ensure that pins are not bent or pushed out of their connectors.

Ensure all wire terminals are properly crimped on wires, and connector housings are properly fastened.

Check for signs of moisture, corrosion or dullness. Clean pins properly and coat them with DIELECTRIC GREASE (P/N 293 550 004) or other appropriate lubricant when reassembling them, except if otherwise specified such as for the ECM connectors.

Pay attention to ground wires.

PROCEDURES

CONSOLE SWITCHES

Replacing the Switches

Disconnect electrical connector.

Release retaining clips, then push switch out of the console.



1. Retaining clips

For installation, reverse removal procedure.

Switches Illumination Wire Identification

FUNCTION	PIN	COLOR
12 volt input from fuse F11	8	RD/BK
Ground	7	BK/BL

NOTE: The illumination circuit of all console switches is supplied by the RD/BK wire.

Switches Illumination Circuit Protection

CONDITION	CIRCUIT PROTECTION
Supplied by main relay	Fuse 11 of fuse block 1

HEADLIGHTS

Headlight Wire Identification

MAIN RELAY (R2)		
FUNCTION	PIN	COLOR
12 volt input from battery	B2	RD/GY
12 volt input from battery (Relay winding input)	B1	RD/GY
12 volt output to headlights low beam and low/high beam switch (fuse F11)	A1	RD/BE
Relay winding ground (from ECM-B H2)	A2	OR/BU

HEADLIGHT LOW/HIGH BEAM SWITCH		
FUNCTION	PIN	COLOR
12 volt output to low beam headlights	3	GN
12 volt input from F11 (low beam)	2	YL/BK
12 volt output to high beam headlights	6	BU
12 volt input from F11 (high beam)	5	YL/BK

SIGNATURE LIGHTS		
FUNCTION	PIN	COLOR
12 volt input (from F11)	A	YL/BK
Ground	C	BK

Headlights Circuit Protection

CONDITION	CIRCUIT PROTECTION
Supplied by main relay (R2)	Fuse 11 of fuse block 1

Testing the Headlight

Disconnect headlight connector.

Using a multimeter, measure the voltage on headlight connector as follows.

SWITCH POSITION	WIRE COLOR		VOLTAGE
LO beam/ HI beam	GN (Low beam)	BK	Battery voltage
HI beam	BU (Hi beam)	BK	

Replacing the Headlight

Unplug connector from headlight.

Remove the three screws.

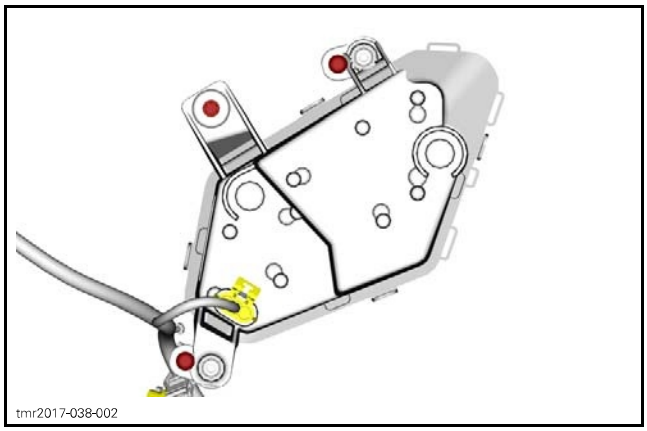

Properly reinstall removed parts in the reverse order of their removal.

Validate headlight operation.

Headlamp Beam Aiming

Make sure the vehicle is squared with the test surface (wall or screen).

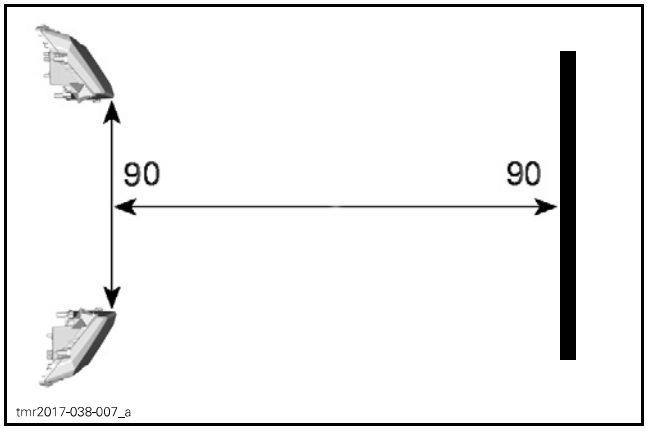

Select high beam.

NOTE: Load vehicle as per normal use.

Measure headlight center distance from the ground. Scribe a line at this height on test surface (wall or screen). Light beam center should be 130 mm (5 in) below scribed line.

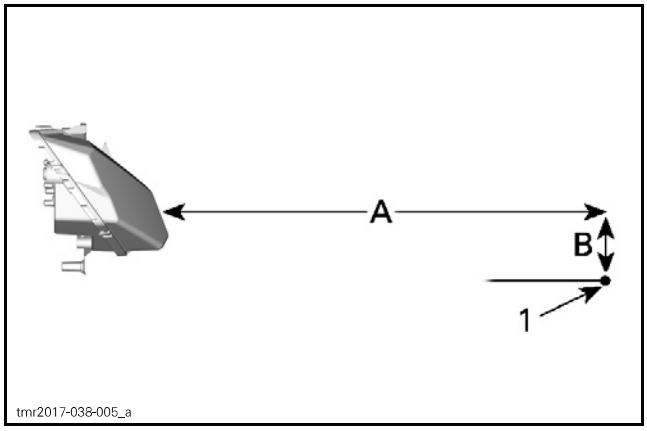

1. Light beam center
A. 5 m (16 ft)
B. 130 mm (5 in)

Beam Aiming Adjustment

Turn adjustment screws to adjust beam height and side orientation as described below. Adjust both headlight evenly.

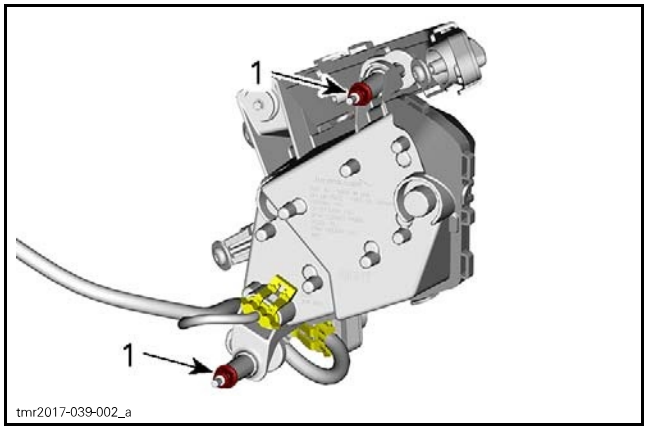

1. Adjustment screws

TAILLIGHTS/BRAKE LIGHTS

Taillight/Brake Light Wire Identification

MAIN RELAY (R2)		
FUNCTION	PIN	COLOR
12 volt input from battery	B2	RD/GY
12 volt input from battery (Relay winding input)	B1	RD/GY
12 volt output to taillights (fuse F16)	A1	RD/BE
Relay winding ground (from ECM-B H2)	A2	OR/BU

BRAKE LIGHT SWITCH		
FUNCTION	PIN	COLOR
12 volt input from fuse F4	2	OR/GN
12 volt output to RH brake light and R8 relay winding	1	RD/OR

Taillight/Brake Light Circuit Protection

LAMP	CIRCUIT PROTECTION
Tail lamp and Brake lamp	Fuse 16 of fuse block 1

Replacing Taillight/Brake Light

Disconnect connector.

Remove the four screws.

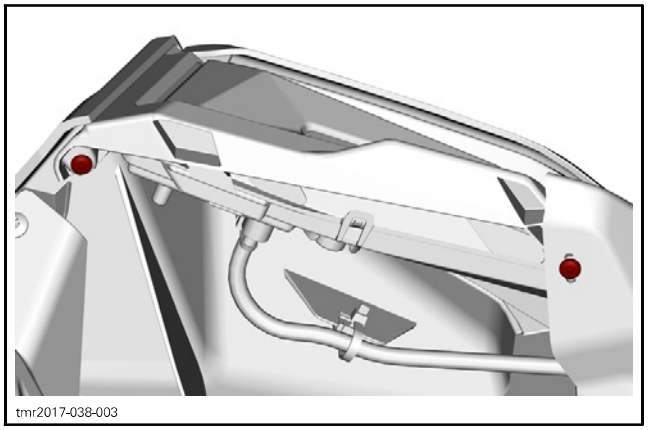

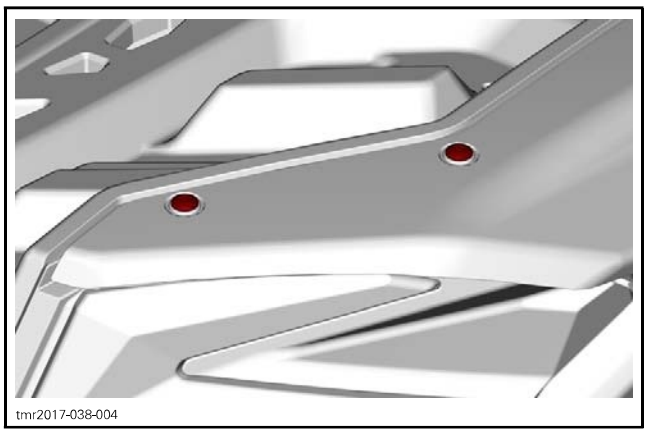

Installation is the reverse of the removal procedure.

GAUGE

SERVICE PRODUCTS

Description	Part Number	Page
DIELECTRIC GREASE	293 550 004	1

GENERAL

NOTICE It is recommended to always disconnect the battery when replacing any electric or electronic parts. Always disconnect battery exactly in the specified order, BLACK (-) cable first.

TROUBLESHOOTING

DIAGNOSTIC TIPS

NOTE: It is a good practice to check for fault codes using BUDS2 software as a first troubleshooting step. Refer to *COMMUNICATION TOOLS* subsection.

IMPORTANT: When troubleshooting an electrical system fault, check battery condition, cables and connections first.

Circuit Testing

Check the related-circuit fuse condition with a fuse tester or test lamp (a visual inspection could lead to a wrong conclusion).

NOTE: If the ignition switch is left ON for more than 30 minutes, the accessory relay will shut down.

Electrical Connection Inspection

When replacing an electric or electronic component, always check electrical connections. Make sure they are tight, make good contact, and are corrosion-free. Dirty, loose or corroded contacts are poor conductors and are often the source of a system or component malfunction.

Pay particular attention to ensure that pins are not bent or pushed out of their connectors.

Ensure all wire terminals are properly crimped on wires, and connector housings are properly fastened.

Check for signs of moisture, corrosion or dullness. Clean pins properly and coat them with DIELECTRIC GREASE (P/N 293 550 004) or other appropriate lubricant when reassembling them, except if otherwise specified such as for the ECM connectors.

Pay attention to ground wires.

PROCEDURES

MULTIFUNCTION GAUGE

Multifunction Gauge Wire Identification

FUNCTION	PIN	COLOR
12 volt input from fuse F4	17	OR/GN
12 volt input from fuse F8	16	BE/WH
Ground	20	BK
CAN LO	18	WH/BK
CAN HI	19	WH/BE
Fuel level gauge supply	4	BR/PK
Fuel level gauge ground	21	VI/PK
2WD/4WD switch signal (-)	7	BK/BE
HI beam signal (+)	5	BU

Multifunction Gauge Circuit Protection

CONDITION	CIRCUIT PROTECTION
Supplied at all times	Fuse 8 of fuse block
Supplied by main relay	Fuse 4 of fuse block 1 (from main relay R2)

Removing the Multifunction Gauge

1. Remove retaining screws at bottom of gauge.

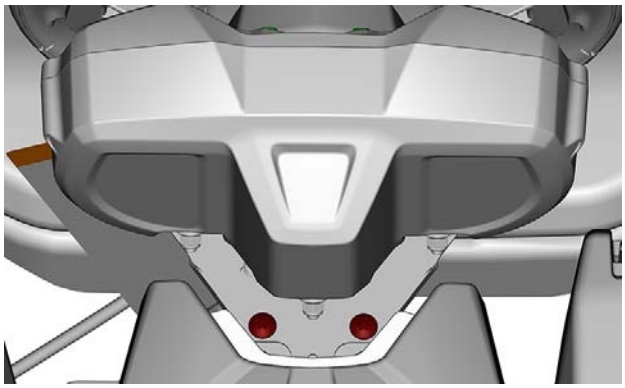
tmr2017-039-001

2. Disconnect gauge connector.

Installing the Multifunction Gauge

The installation is the reverse of the removal procedure.

Maintenance Soon Message

Maintenance Soon Message Manual Reset

1. Select PARK.
2. Turn ignition switch to ON. Do NOT start engine.

NOTE: The steps 3 through 9 must be completed within **5 seconds**.

3. Press override button and HOLD.
4. Press and release brake pedal.
5. Release override button.
6. Press and release brake pedal.
7. Press override button and HOLD.
8. Press and release brake pedal.
9. Release override button.
10. Turn ignition switch to OFF.

NOTE: Do not turn ignition switch to ON before the multifunction gauge turns off.

Maintenance Soon Message Reset Using BUDS2

Connect to BUDS2 software. Refer to *COMMUNICATION TOOLS* subsection.

Select **Summary** tab.

Click on the **Reset Service** button.

Gauge Self Test Function

Gauge self test only runs if the gauge has been off for more than 30 seconds.

On **ECM wake-up**, the gauge will perform a self-test. All indications should come ON and gauge pointers will cycle once. You will have a few seconds to ensure the indications (**LEDs** and **LCDs**) are functioning correctly.

NOTE: This test only validates the gauge operation of the **LEDs**, **LCDs** in the gauge digital display and the pointers. It does not test the actual circuit functions related to each indication.

If the self test does not take place, test gauge input power.

Gauge Setup

Activating Clock

The gauge has an internal clock that can display the time of day in the lower digital display (when selected).

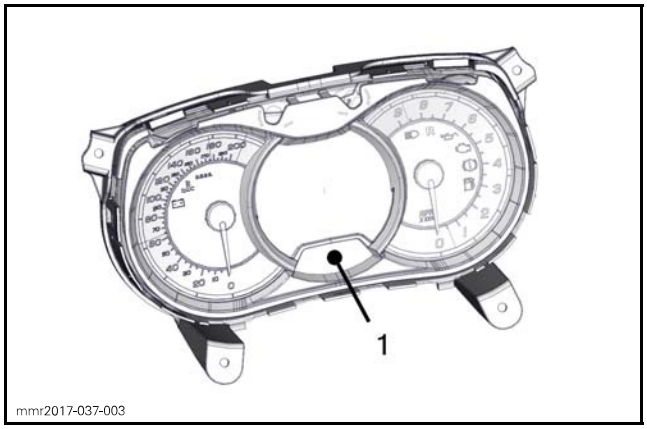

mmr2017-037-003

1. Clock displayed

1. In BUDS2, select the **Settings** page.
2. Activate the clock.

Changing Gauge Units of Measurement

The gauges are factory preset to indicate in imperial units and can be changed using the BUDS2 software.

To change the gauge units of measurement in BUDS2:

1. Provide electrical power to the gauge.
2. In BUDS2, select the **Setting** page.
3. Select **Imperial** or **Metric** in the **Cluster Units** field.

NOTE: Speedometer, odometer and trip meter will have their units (kilometer or miles) changed simultaneously.

Adjusting Speedometer and Tachometer Pointer

1. In BUDS2, select the **Settings** page.

2. Click on **Clockwise** or **Counterclockwise** button to align gauge pointer with the zero (0).

NOTE: Because of the fine tuning of the pointer, the button must be pressed several times before perceiving pointer movement.

Tire Size Selection

Select the appropriate tire size in the **Settings** page.

Displaying "P" Codes

1. To activate **P CODE** mode, push and hold the "**M**" button for 2 seconds.
2. As you hold the "**M**" button, quickly turn ON and OFF the high beams a few times. The gauge will enter **P CODE** mode.
3. While in **P CODE** mode, use the "**M**" or "**S**" button to scroll over available failure codes.
4. Push and hold the "**M**" button to exit **P CODE** mode.

A **NO ACTIVE P CODE** message is displayed if there are no **P CODES** in memory.

Testing Gauge With BUDS2

The *GAUGE SELF TEST* can be duplicated using BUDS2.

1. Connect vehicle to BUDS2. Refer to *COMMUNICATION TOOLS* subsection.
2. In BUDS2, choose the **Functions** page.
3. Select **WOW Test**.

Testing Gauge Power(Main 12 Vdc)

If the gauge does not come on when the engine is started, carry out the following test.

1. Remove multifunction gauge.
2. Disconnect the gauge connector.
3. Set multimeter to Vdc.
4. Start engine.
5. Measure voltage with the chassis ground as per following table.

GAUGE CONNECTOR	VOLTAGE
Pin 17	Approximately 14.75 Vdc

6. If gauge main power input test was as specified, test the gauge ground circuit.
7. If no voltage was read, test wiring continuity. Refer to *WIRING DIAGRAM* for details.

Testing Gauge Ground

1. Set multimeter to Ω selection.
2. Measure for continuity of gauge ground wire to chassis ground as per following table.

GAUGE CONNECTOR	RESISTANCE
Pin 20	Close to 0 Ω

If ground test failed, check vehicle ground. Refer to *POWER DISTRIBUTION* subsection.

If gauge power input test and ground circuit continuity tests are good, replace gauge.

Testing Clock 12 Vdc Input

If the clock function in the gauge does not hold the proper time of day when the engine is not running, carry out the following test.

1. Remove multifunction gauge.
2. Disconnect the gauge connector.
3. Set multimeter to Vdc.
4. Measure voltage as per following table.

GAUGE CONNECTOR	VOLTAGE
Pin 16	Battery voltage

5. If there is no voltage read, test input wire continuity. Refer to *WIRING DIAGRAM* for circuit details.

Testing Gauge Beeper

To test beeper, perform the following test with BUDS2.

1. Connect vehicle to BUDS2. Refer to *COMMUNICATION TOOLS*
2. In BUDS2, choose the **Functions** page.
3. Activate the **Cluster Buzzer Test**.

You should hear a few beeps.

– If you do not hear the beeper, replace gauge.

Testing Gauge Buttons with BUDS2

Using the BUDS2 software, select the **Measurements** page.

Press the "**M**" and "**S**" buttons on the cluster.

If the indicator light(s) come ON in BUDS2, the gauge button(s) is(are) functioning correctly.

If the indicator light(s) do not come ON, check button(s) and wiring continuity, refer to *WIRING DIAGRAM*. If they are in good condition, replace gauge.

ACCESSORIES

SERVICE PRODUCTS

Description	Part Number	Page
DEOXIT LUBRICANT	293 550 034	1
DIELECTRIC GREASE	293 550 004	1

GENERAL

NOTICE It is recommended to always disconnect the battery when replacing any electric or electronic parts. Always disconnect battery exactly in the specified order, BLACK (-) cable first.

TROUBLESHOOTING

DIAGNOSTIC TIPS

NOTE: It is a good practice to check for fault codes using BUDS2 software as a first troubleshooting step. Refer to *COMMUNICATION TOOLS* subsection.

IMPORTANT: When troubleshooting an electrical system fault, check battery condition, cables and connections first.

Testing Circuits

Check the related-circuit fuse condition with a fuse tester or test lamp (a visual inspection could lead to a wrong conclusion).

NOTE: If the ignition switch is left ON for more than 30 minutes, the accessory relay will shut down.

Inspecting Electrical Connections

When replacing an electric or electronic component, always check electrical connections. Make sure they are tight, make good contact, and are corrosion-free. Dirty, loose or corroded contacts are poor conductors and are often the source of a system or component malfunction.

Pay particular attention to ensure that pins are not bent or pushed out of their connectors.

Ensure all wire terminals are properly crimped on wires, and connector housings are properly fastened.

Check for signs of moisture, corrosion or dullness. Clean pins properly with DEOXIT LUBRICANT (P/N 293 550 034) and coat them with DIELECTRIC GREASE (P/N 293 550 004) or other appropriate lubricant when reassembling them, except if otherwise specified such as for the ECM connectors.

Pay attention to ground wires.

PROCEDURES

CONSOLE SWITCHES

Replacing the Switches

Disconnect electrical connector.

Release retaining clips, then push switch out of the console.

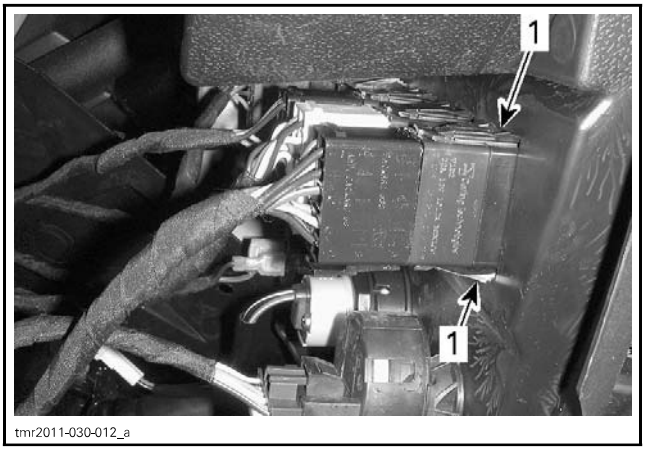

1. Retaining clips

For installation, reverse removal procedure.

Identifying Switches Illumination Wire

FUNCTION	PIN	COLOR
12 volt input from fuse F7	8	RD/BK
Ground	7	BK/BU

NOTE: The illumination circuit of all console switches is supplied by the RD/BK.

Switches Illumination Circuit Protection

CONDITION	CIRCUIT PROTECTION
Supplied by main relay	Fuse 7 of fuse block 1

12 VOLT POWER OUTLET

Removing and Installing 12 Volt Power Outlet

Refer to *BODY* and remove mid dashboard cover.

Unplug the connector of the power outlet.

Unscrew the retaining nut.

Reverse procedure for installation.

Identifying 12 Volt Power Outlet Wire

FUNCTION	PIN	COLOR
12 volt input from fuse F12	2	RD/BR
Ground (to ground terminal BN1)	1	BK

12 Volt Power Outlet Circuit Protection

CONDITION	CIRCUIT PROTECTION
Supplied with accessories relay activated	Fuse 12 of fuse block 1 (from accessories relay R3)

WHEELS AND TIRES

SERVICE PRODUCTS

Description	Part Number	Page
LOCTITE 767 (ANTISEIZE LUBRICANT)	293 800 070	3

PROCEDURES

TIRES

⚠ WARNING

Do not rotate tires. The front and rear tires have a different size. Respect direction of rotation when applicable.

Tire Pressure

⚠ WARNING

Tire pressure greatly affects vehicle handling and stability. Insufficient pressure may cause tire to deflate and rotate on wheel. Excessive pressure may burst the tire. Always follow recommended pressure.

Check pressure when tires are **cold** before using the vehicle. Tire pressure changes with temperature and altitude. Recheck pressure if one of these conditions has changed.

Refer to technical specifications for tire pressure table.

Tire Inspection

Check tire for presence of slits, bulges, wear or other damage. Replace if necessary.

Tire Replacement

Use an automotive tire changer to replace tires.

⚠ WARNING

– Replace tires only with the same type and size as original tires.
– For unidirectional tread pattern, ensure that the tires are installed in the correct direction of rotation.

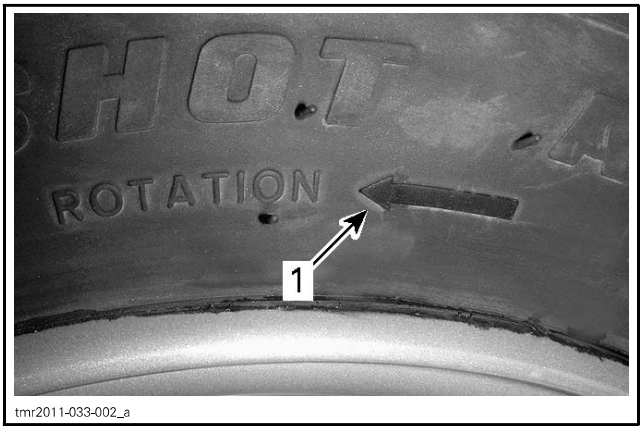

TYPICAL
1. Direction of rotation

Check for proper tire size

Tire Mounting on Beadlock Wheels

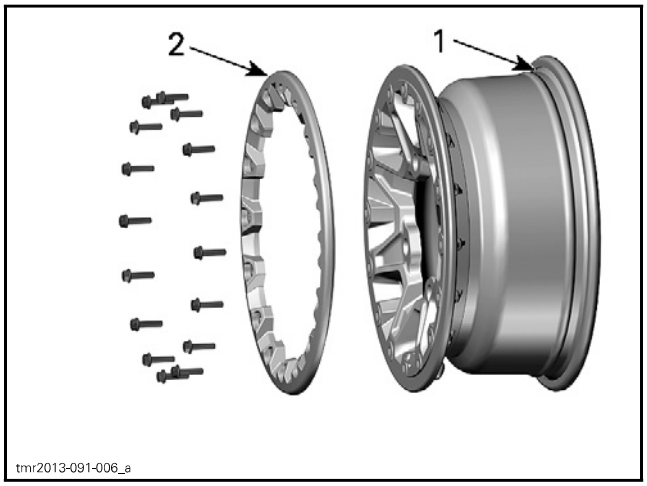

TYPICAL
1. Inner tire bead seat
2. Outer tire beadlock ring

NOTE: Tires should be mounted, by an experienced person, in accordance to good tire mounting practices using acceptable tire mounting equipment designed for the tire industry.

1. Mount the tire on wheel.
   1.1 On the opposite side of beadlock, apply the tire mounting lube on inner bead of tire and wheel to ensure proper seating when inflating.
   1.2 Mount the inner bead over the wheel.

NOTICE Mount tire from beadlock side only.

1.3 Seat the tire outer bead in the shoulder of the beadlock inner ring and center the tire.

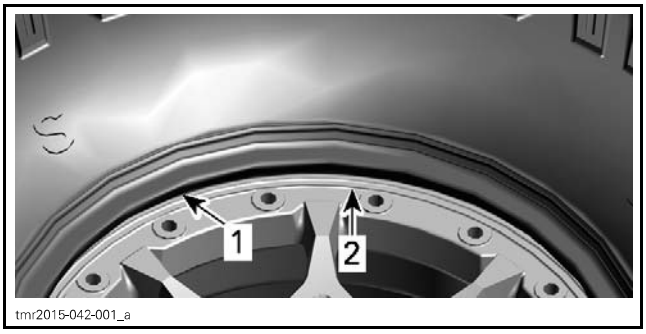

1. Tire outer bead
2. Beadlock inner ring shoulder

2. Install all beadlock screws. To avoid cross threading, start all screws by hand.

NOTICE Do not use an impact wrench for installing beadlock screws. The risk of screw breaking or screw stripping is high when using an impact wrench.

3. Tighten beadlock screws as per following specification and sequence.

NOTE: To ensure even pressure on the beadlock clamp ring, tighten screws **a few turns at a time**.

TIGHTENING TORQUE	
Beadlock screws (FIRST TORQUE)	14 N•m ± 1 N•m (124 lbf•**in** ± 9 lbf•**in**)

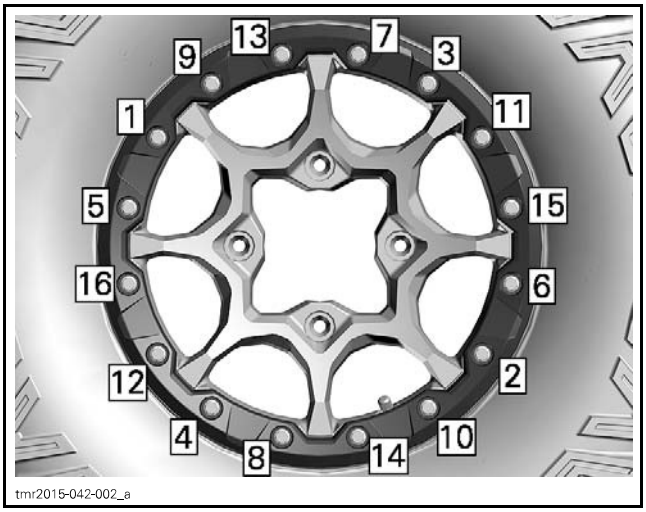

FIRST TIGHTENING SEQUENCE

4. At this time check if the tire is still centered on wheel. Reposition it if necessary.
5. Tighten beadlock screws as per the **second** torque using the same sequence.

TIGHTENING TORQUE	
Beadlock screws (SECOND TORQUE)	25 N•m ± 1 N•m (18 lbf•ft ± 1 lbf•ft)

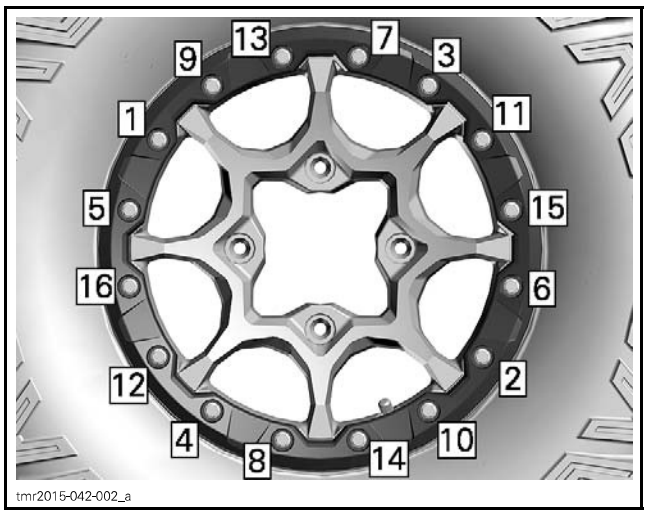

SECOND TIGHTENING SEQUENCE

NOTE: The beadlock clamp ring should be in contact with the beadlock inner ring. The beadlock clamp ring can flex slightly to match the tire bead. IT IS NORMAL.

6. Verify the gap between tire and beadlock clamp ring, it should be practically equal all around the ring.

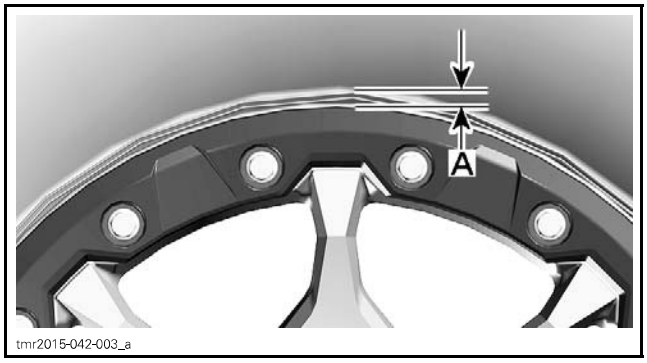

A. Gap equal all around beadlock clamp ring

If the gap is not acceptable:

– Loosen all screws.
– Check tire position on wheel and reposition it if necessary.
– Restart the tightening sequence as detailed.

7. Tighten beadlock screws a **final** time as per following specification and sequence.

TIGHTENING TORQUE	
Beadlock screws (FINAL TORQUE)	25 N•m ± 1 N•m (18 lbf•ft ± 1 lbf•ft)

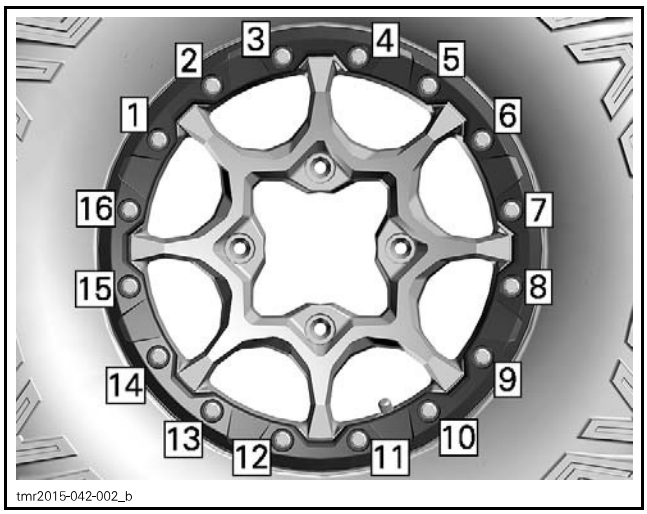

FINAL TIGHTENING SEQUENCE

8. Inflate tire to seat the inner bead on wheel. Always use safe practices, such as a tire safety cage.

⚠ WARNING

Never exceed tire recommended maximum pressure for seating beads.

WHEELS

Removing the Wheel

Loosen nuts just enough to be able to unscrew them once the vehicle will be off the ground.

Lift and support the vehicle. Refer to *INTRODUCTION* subsection.

Remove nuts, then remove wheel.

Inspecting the Wheel

Inspect wheel for wear or damage especially at the mounting holes.

Installing the Wheel

At installation it is recommended to apply anti-seize lubricantLOCTITE 767 (ANTISEIZE LUBRICANT) (P/N 293 800 070) on conical area **only**.

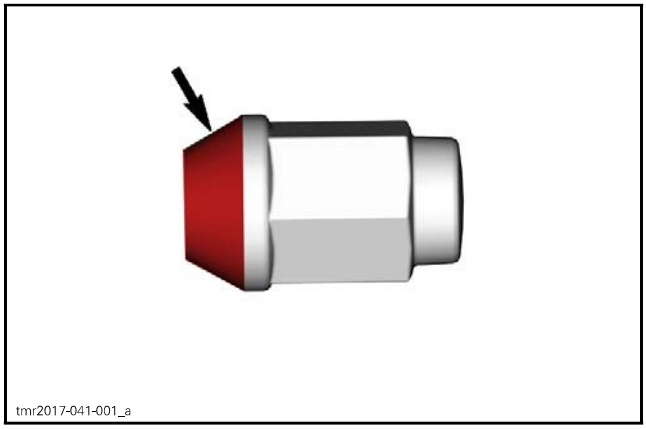

Check if tires are unidirectional.

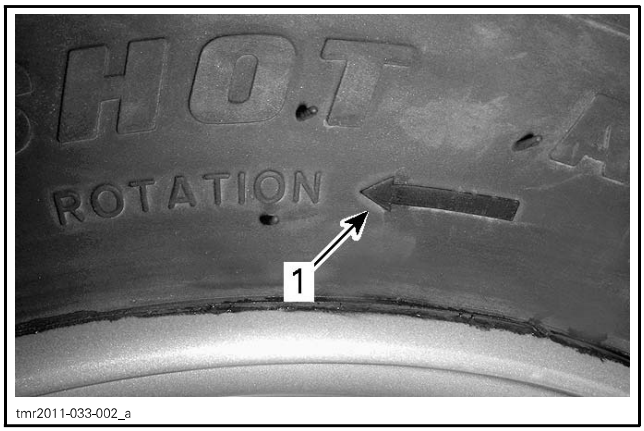

TYPICAL
1. Direction of rotation

Tighten wheel lug nuts to the specified torque using the illustrated sequence.

TIGHTENING TORQUE	
Wheel lug nuts	120 N•m ± 10 N•m (89 lbf•ft ± 7 lbf•ft)

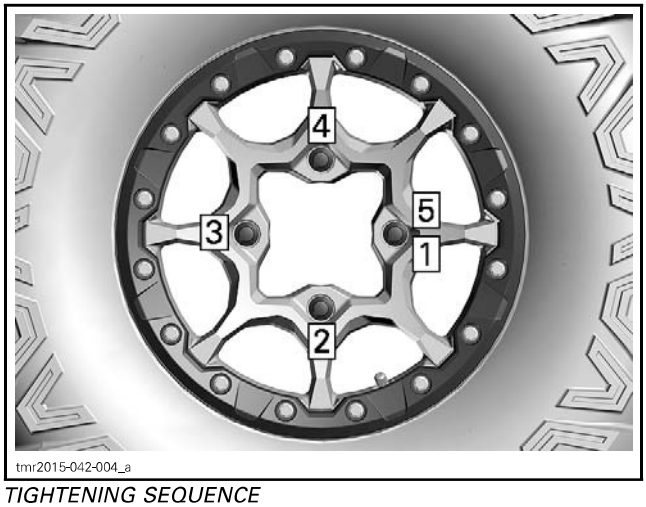

TIGHTENING SEQUENCE

NOTICE Always use the recommended wheel lug nuts for the type of wheel. Using a different lug nut could cause damages to the rim or studs.

FRONT DRIVE

SERVICE TOOLS

Description	Part Number	Page
BACKLASH MEASUREMENT TOOL	529 036 387	9
CV BOOT CLAMP PLIER	529 036 120	5
CV JOINT EXTRACTOR	529 036 005	5

SERVICE PRODUCTS

Description	Part Number	Page
LOCTITE 277	293 800 073	12–13
XPS SYNTHETIC GREASE	293 550 010	4–6, 13

FRONT DRIVE SHAFTS AND PROPELLER SHAFTS

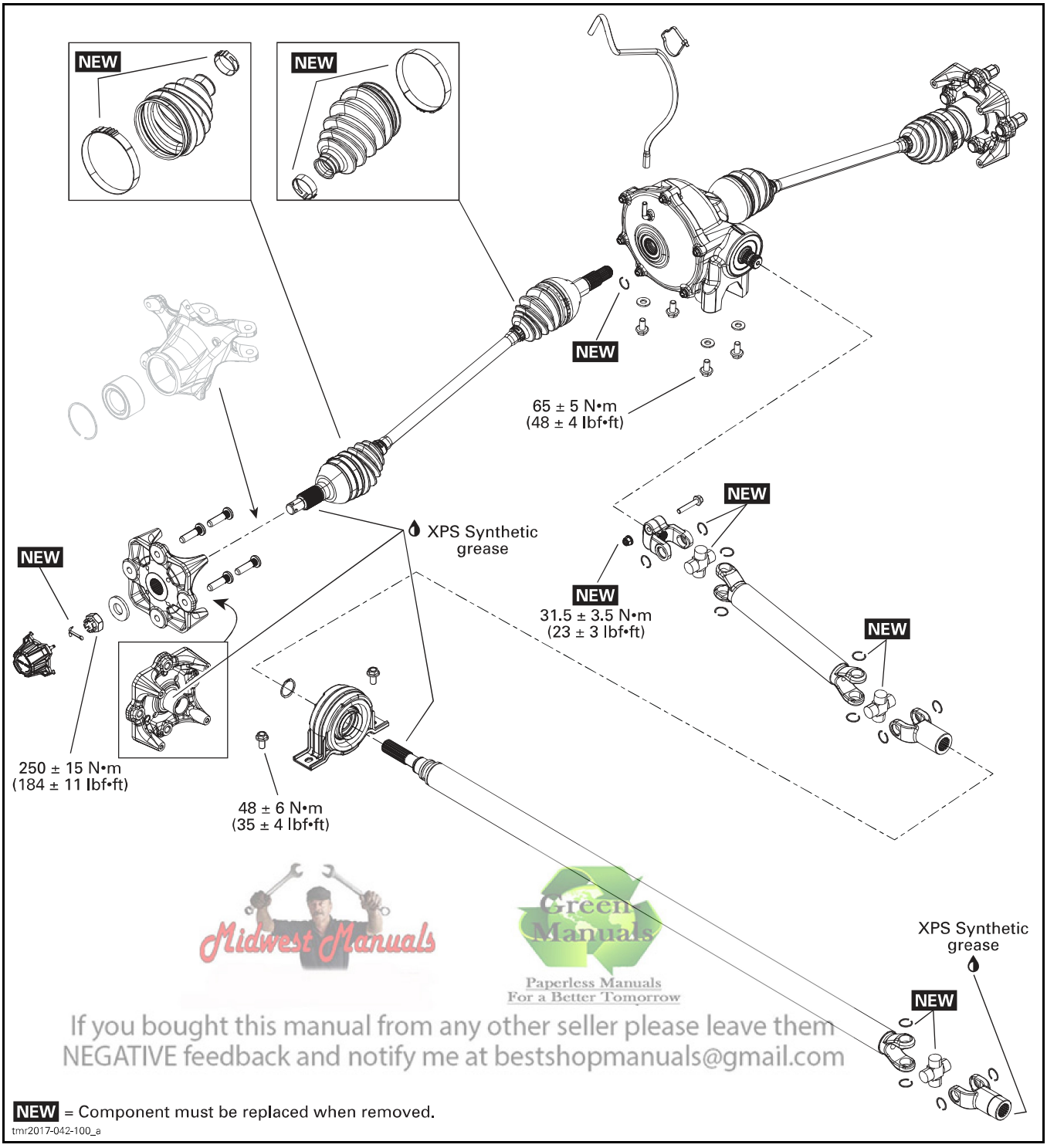

Midwest Manuals
Green Manuals
Paperless Manuals
For a Better Tomorrow
If you bought this manual from any other seller please leave them
NEGATIVE feedback and notify me at bestshopmanuals@gmail.com

FRONT DIFFERENTIAL

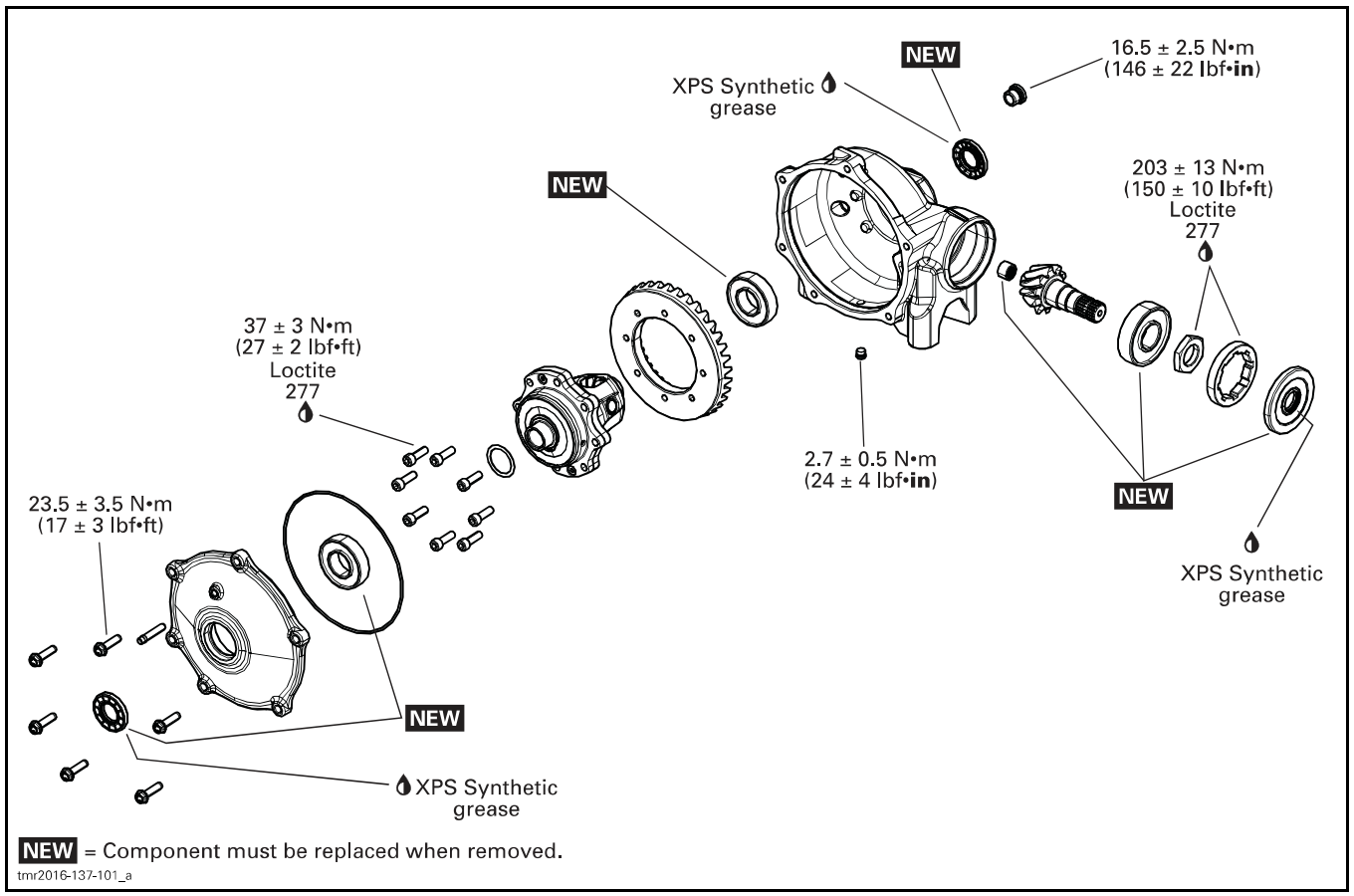

GENERAL

The procedure explained below is the same for the RH and LH sides unless otherwise specified.

SYSTEM DESCRIPTION

When one wheel is spinning above a certain rate faster than the other wheel, the Visco-Lok® system progressively locks the wheels through its multi-plate clutch.

In the event of a failure, the entire Visco-Lok pump and its carrier will have to be replaced. The Visco-Lok pump itself is a non-serviceable item.

NOTE: If the pump was disassembled, its viscous fluid would be lost and it could not be replaced.

PROCEDURES

WHEEL HUB

Removing the Wheel Hub

1. Lift and support vehicle. Refer to *INTRODUCTION* section for proper procedure.
2. Select the 4WD position and place the transmission lever on "P".
3. Remove caliper from knuckle. Refer to *BRAKES* subsection.
4. Remove the following parts:
   - Wheel
   - Cotter pin
   - Castellated nut
   - Belleville washer.

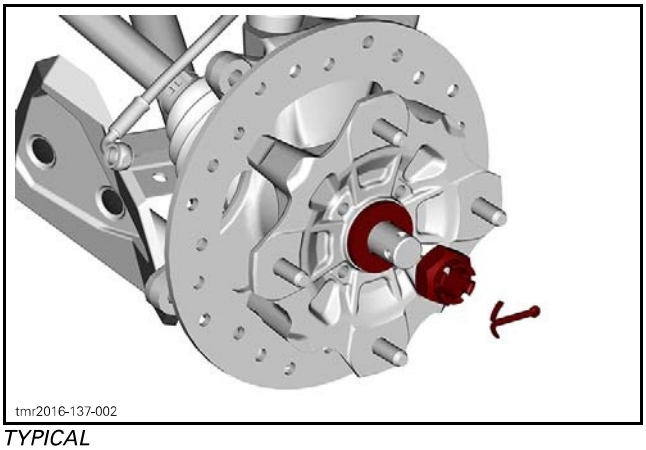

TYPICAL

5. Remove wheel hub.

Inspecting the Wheel Hub

Check wheel studs for damaged threads and overall conditions

Check wheel hub for cracks or other damages.

Check inner splines for wear or other damages.

Replace wheel hub and / or studs if any damage is detected.

Installing the Wheel Hub

The installation is the reverse of removal procedure. However, pay attention to the following.

Apply XPS SYNTHETIC GREASE (P/N 293 550 010) all around drive shaft and wheel hub splines, and on the outer cylindrical surface.

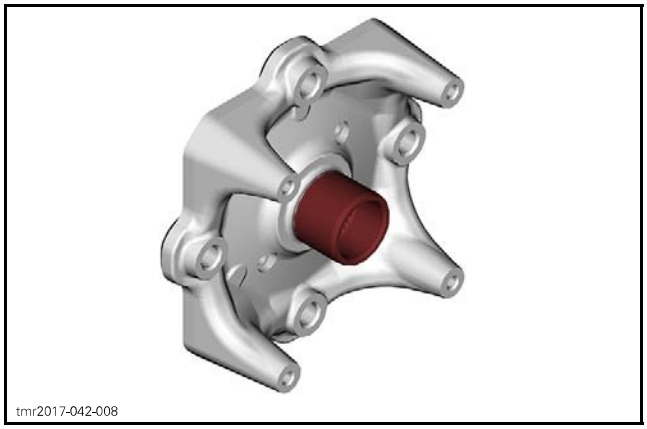

Install Belleville washer with its domed side outwards.

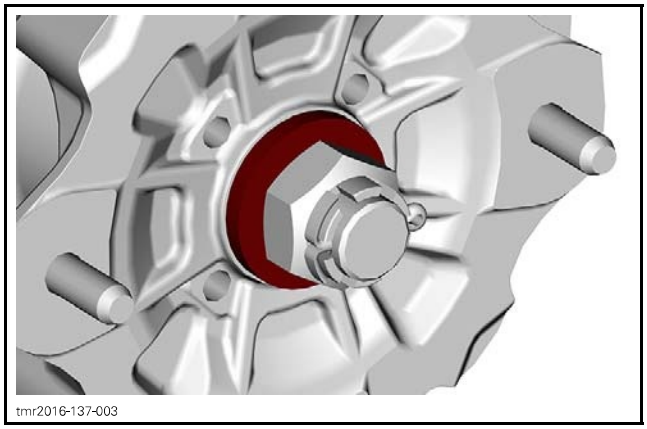

TYPICAL

TIGHTENING TORQUE	
Castellated nut	250 N•m ± 15 N•m (184 lbf•ft ± 11 lbf•ft)

NOTE: Tighten further castellated nut if required to align grooves with drive shaft hole.

Install a new cotter pin.

FRONT DRIVE SHAFT

Removing the Front Drive Shaft

1. Remove the wheel hub. Refer to procedure in this subsection.
2. Remove the knuckle. Refer to *STEERING SYSTEM* subsection.
3. Strongly pull drive shaft out of differential.
4. Discard the stop ring at the end of the shaft.

Inspecting the Front Drive Shaft

Inspect the condition of boots. If there is any damage or evidence of leaking lubricant, replace them. Refer to *DRIVE SHAFT BOOT*.

Check splines for excessive wear. Replace if necessary.

NOTE: If the splines on plunging joint are worn, a check of differential inner splines should be done.

Installing the Front Drive Shaft

The installation is the reverse of the removal procedure. However, pay attention to the following.

Install a new stop ring.

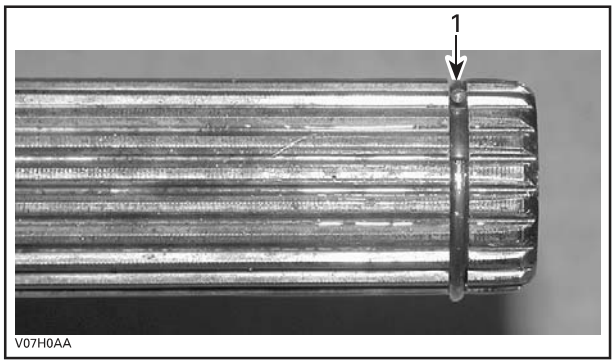

1. Stop ring

Apply XPS SYNTHETIC GREASE (P/N 293 550 010) to the splines.

DRIVE SHAFT BOOT

Removing the Drive Shaft Boot

1. Remove the drive shaft from the vehicle.
2. Remove drive shaft boot clamps.

REQUIRED TOOL	
CV BOOT CLAMP PLIER (P/N 529 036 120)	

3. Dislodge the large boot end.
4. Separate the joint from the shaft. Two procedures can be done.

Without the Special Tool

1. Clamp joint housing in a vise.
2. Align shaft with joint.
3. Pull hard on shaft to remove from joint.
4. Remove boot from drive shaft.
5. Remove and discard the circlip.

With the Special Tool

REQUIRED TOOL	
CV JOINT EXTRACTOR (P/N 529 036 005)	

1. Place drive shaft in vice with the joint downward.
2. Install the cv joint extractor on the bearing.

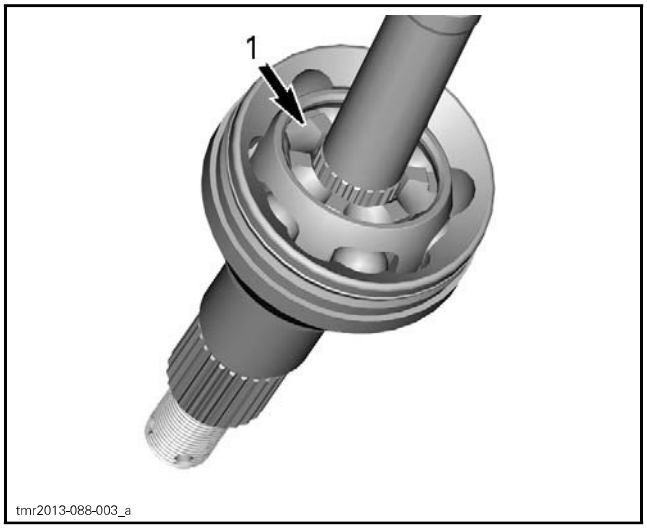

TYPICAL - CV JOINT SHOWN
1. Position joint extractor tool here

3. With a hammer, hit on the tool to separate joint from shaft.
4. When joint and shaft are separated, remove boot from drive shaft.
5. Remove and discard the circlip.

Installing the Drive Shaft Boot

The installation is the reverse of the removal procedure. However, pay attention to the following.

Install the new circlip.

Pack bearing area with grease included with the new boot kit.

NOTE: Do not use or add other grease.

FRONT PROPELLER SHAFT

Removing the Front Propeller Shaft

1. Remove the front RH side wheel. Refer to *WHEELS AND TIRES* subsection.
2. Remove propeller shaft screw and nut on differential end.

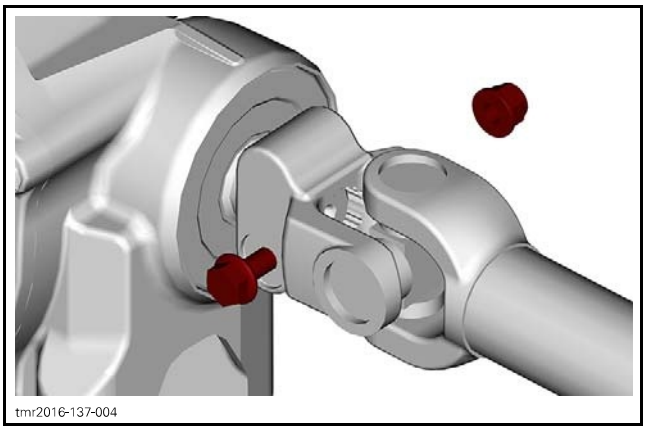

tmr2016-137-004

3. Remove the LH and RH front console panels.

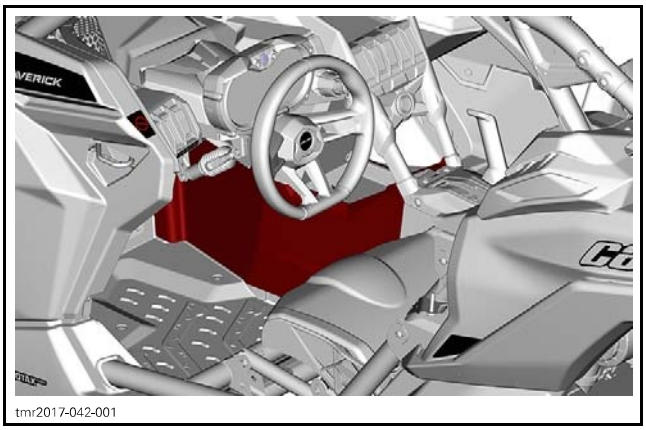

tmr2017-042-001

4. Remove the propeller shaft bearing bolts

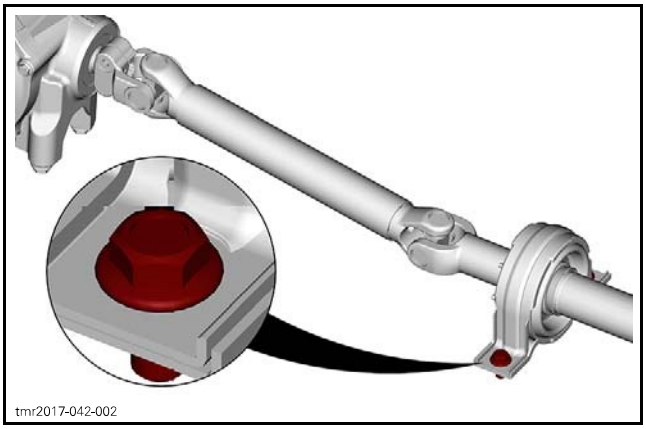

tmr2017-042-002

5. Dislodge the propeller shaft from the differential side first by pushing both propeller shafts towards the engine. When it is disengaged from the differential, move it towards front, beside the differential to disengage from the rear propeller shaft.
6. Remove front propeller shaft from the cockpit, through the LH console panel opening.

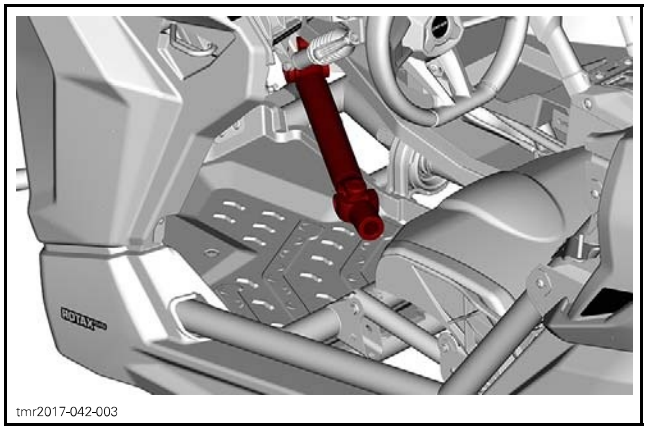

tmr2017-042-003

Inspecting the Front Propeller Shaft

Inspect if propeller shaft is not bent or twisted.

Check propeller shaft splines for wear or damage.

Check both U-joint crosses. They should rotate smoothly without any play.

Replace if required.

Installing the Front Propeller Shaft

The installation is the reverse of the removal procedure. However, pay attention to the following.

Apply XPS SYNTHETIC GREASE (P/N 293 550 010) to splines on engine side.

TIGHTENING TORQUE	
Propeller shaft nut	31.5 N•m ± 3.5 N•m (23 lbf•ft ± 3 lbf•ft)
Propeller shaft bearing bolt	48 N•m ± 6 N•m (35 lbf•ft ± 4 lbf•ft)

REAR PROPELLER SHAFT

Removing the Rear Propeller Shaft

1. Remove the front and rear RH wheels. Refer to *WHEELS AND TIRES* subsection.
2. Remove the front propeller shaft.
3. Remove the LH rear console panel. Refer to *BODY* subsection.
4. Dislodge the rear propeller shaft from the gearbox.
5. Move the front end of the shaft towards inside the cockpit.

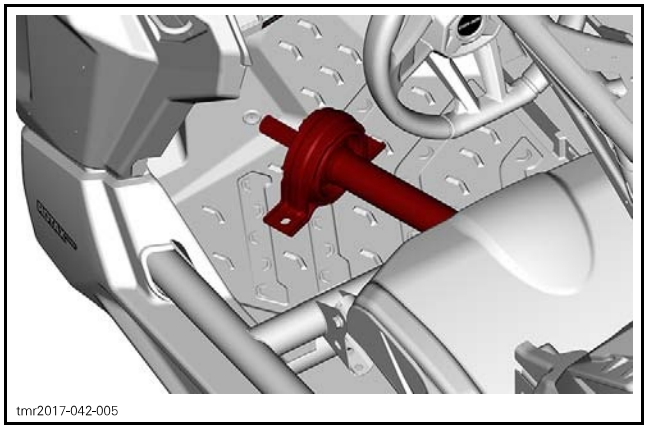
tmr2017-042-005

6. Remove the circlip on the rear propeller shaft and remove the bearing from it.

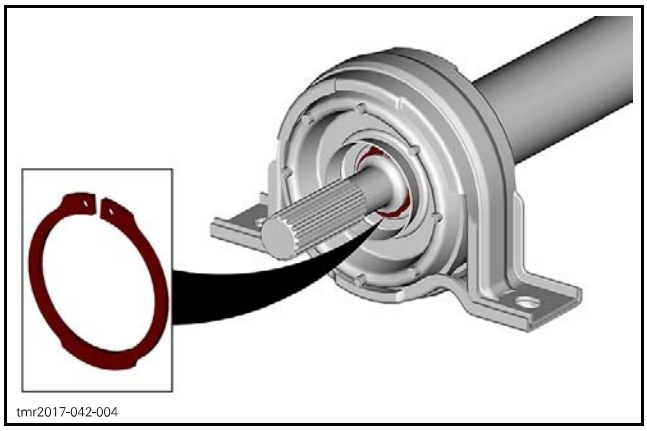
tmr2017-042-004

7. Slide the shaft towards rear, on the RH side of the vehicle, under the engine magneto cover.

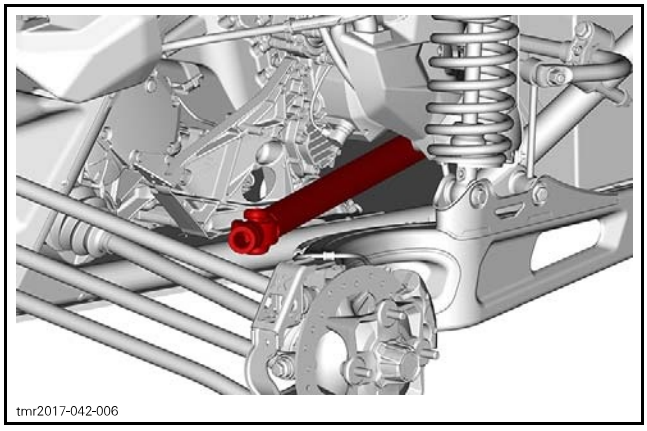
tmr2017-042-006

PROPELLER SHAFT U-JOINTS

Removing the Propeller Shaft U-Joint

1. Remove internal snap ring from bearing caps.

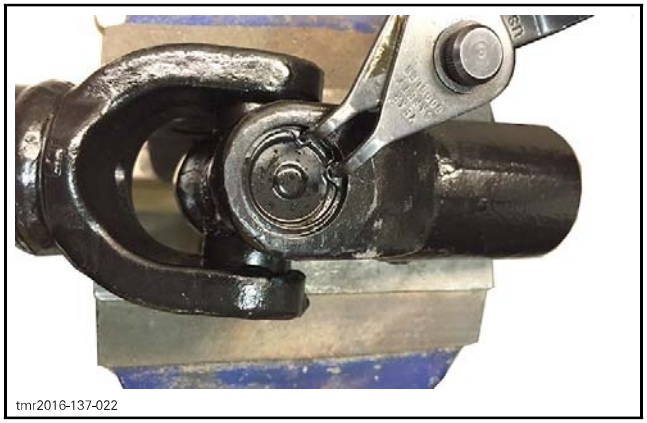
tmr2016-137-022

2. In a vice, use a suitable box to lock the yoke on one side, and a smaller one to push on the U-joint cross on the other side.

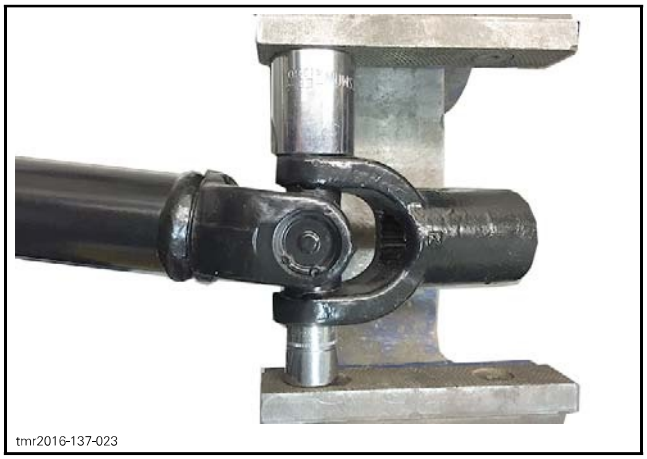
tmr2016-137-023

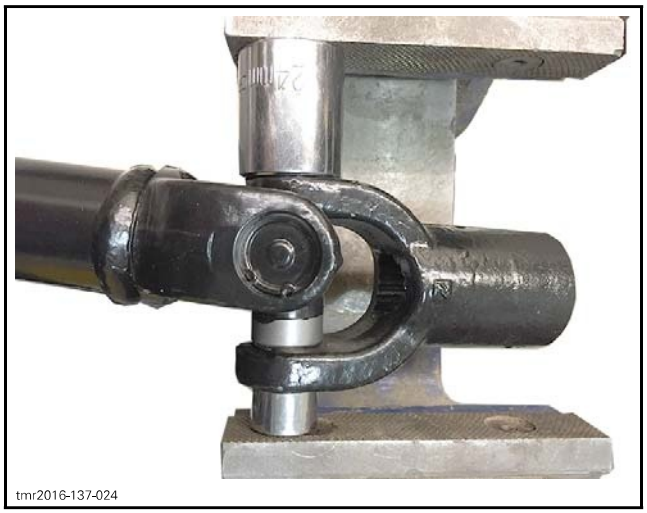
tmr2016-137-024

3. Squeeze the bearing cap in vice and hit the yoke with a soft hammer to remove it.

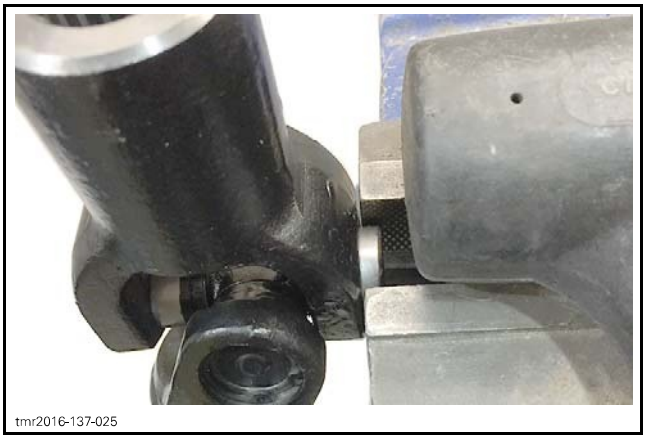
tmr2016-137-025

4. Press the cross on the other side of the yoke to disengage it.

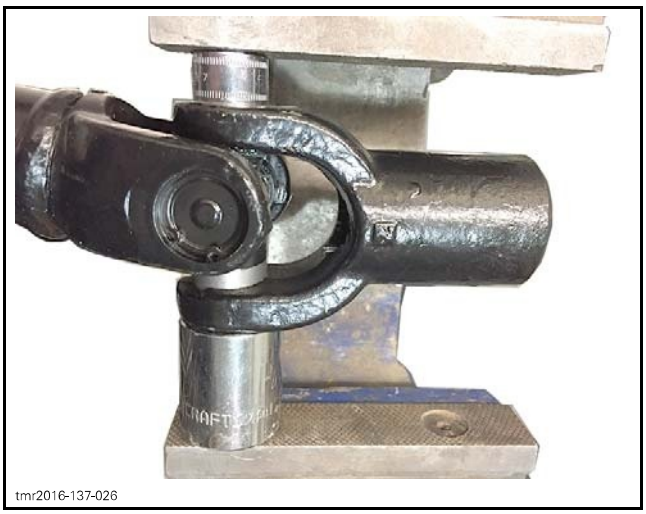
tmr2016-137-026

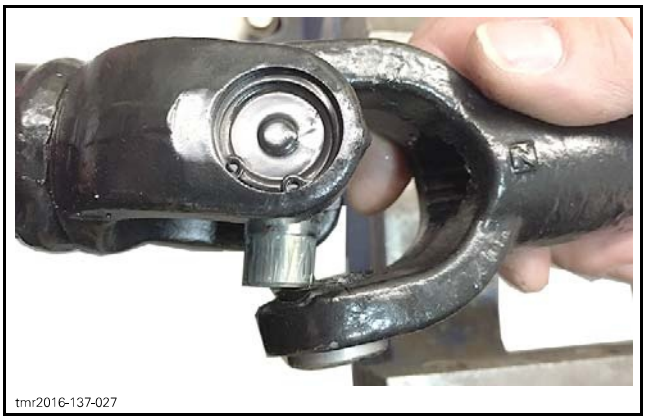
tmr2016-137-027

5. Remove bearing cap.

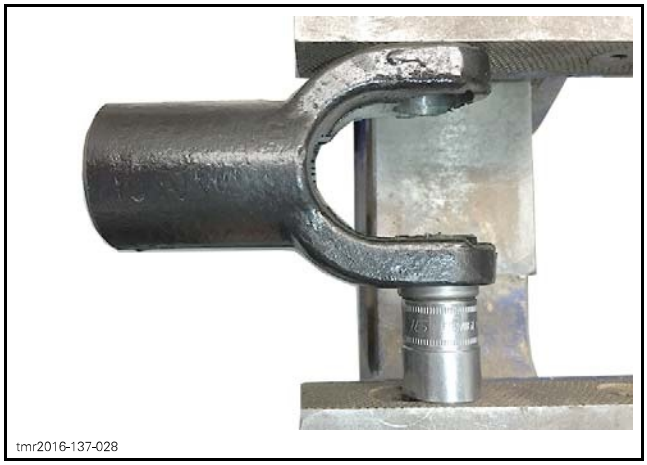
tmr2016-137-028

6. Repeat steps to remove the remaining bearing caps.
7. Remove U-joint cross.

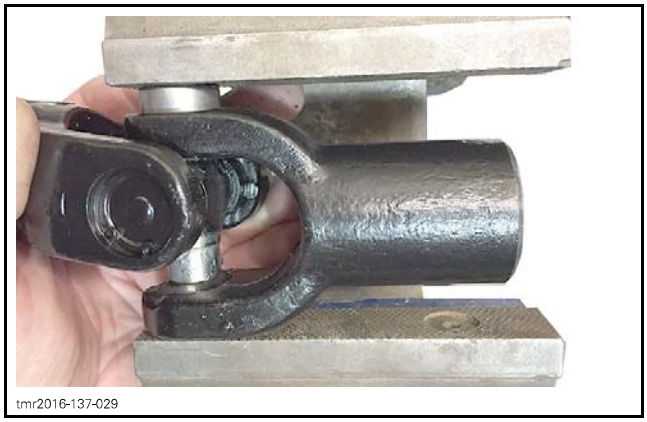
tmr2016-137-029

Installing the Propeller Shaft U-Joint

1. Use a vise to insert the first bearing cap flush with the inner wall of the yoke.

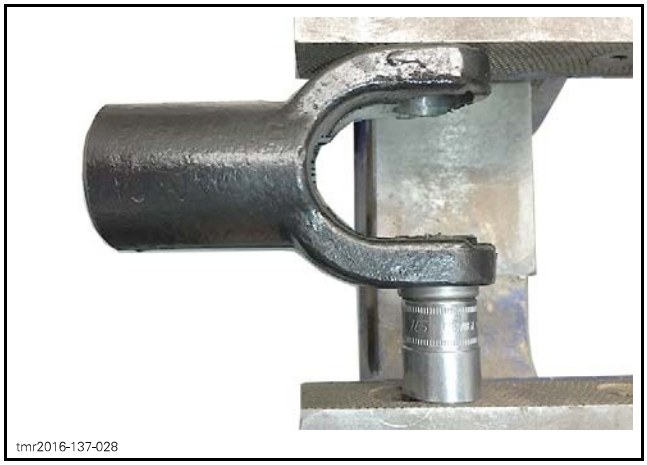
tmr2016-137-028

2. Install new U-joint cross in yoke and slide it in the bearing cap.

NOTICE Ensure bearing needles are perfectly positioned in caps to avoid damage to cross.

3. Fully seat bearing cap on one side.

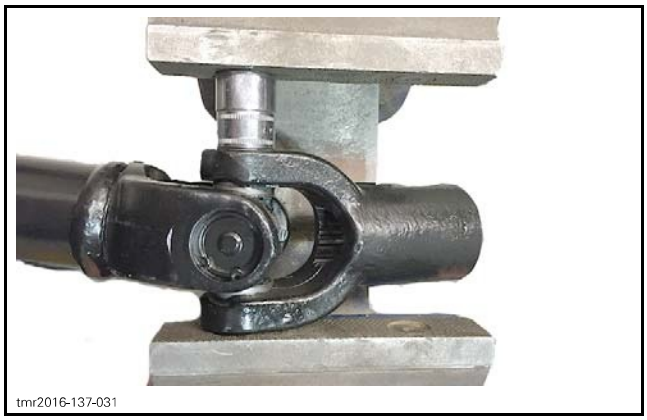

4. Install snap ring.
5. Install the second bearing cap, then snap ring.

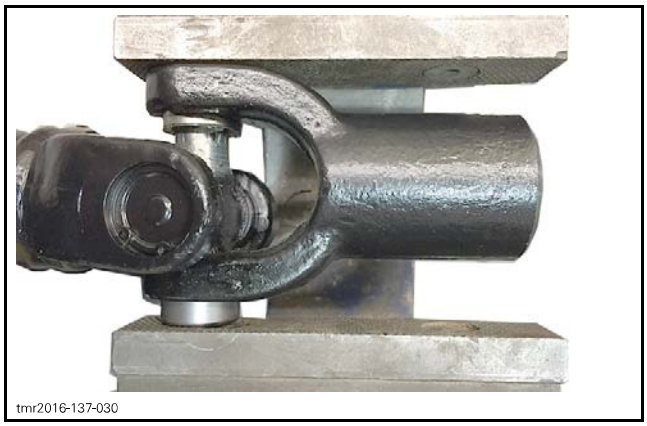

Ensure U-joint is operating smoothly.

FRONT DIFFERENTIAL

Removing the Front Differential

1. Drain the differential. Refer to *PERIODIC MAINTENANCE PROCEDURES* subsection.
2. Remove both drive shafts. Refer to *REMOVING THE FRONT DRIVE SHAFT* procedure in this subsection.
3. Remove the RH upper suspension arm. Refer to *FRONT SUSPENSION* subsection.
4. Detach the front propeller shaft from the differential.
5. Remove the 4 retaining screws from the bottom skid plate.

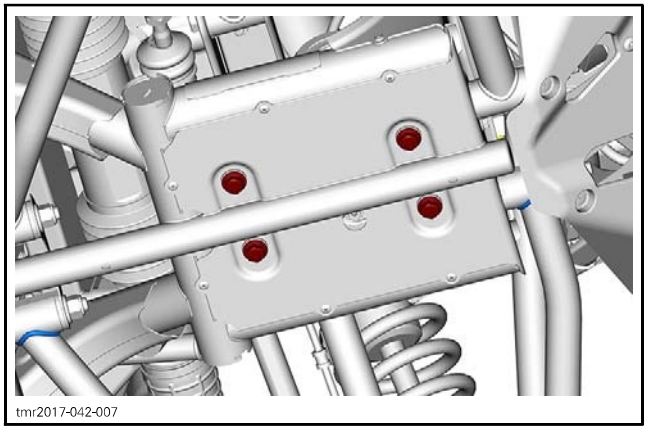

6. Remove the differential from the RH side of vehicle.

Inspecting the Front Differential (Assembled)

Check if oil seals are brittle, hard or damaged. Replace if necessary.

Backlash Inspection

When measuring backlash, the differential cover should be upside down to pull the ring gear out of mesh.

1. Measure the backlash with a dial indicator.

REQUIRED TOOL	
BACKLASH MEASUREMENT TOOL (P/N 529 036 387)	

2. Place the backlash measurement tool at the end of pinion gear.



A. 23 mm (29/32 in)

3. Position the dial indicator tip against the tab at a 90° angle and right in the dimple.
4. Gently, move the tab back and forth. Note the result.

NOTE: While measuring the backlash, make sure the ring gear is not moving.

5. Rotate pinion gear 1/2 turn and check backlash again. Note the result.
6. Rotate pinion gear 1 turn and check backlash again.

BACKLASH SPECIFICATION
0.1 mm (.004 in) to 0.25 mm (.01 in)

If backlash is out of specification, split front differential housing and adjust shim thickness as per following guideline.

BACKLASH ADJUSTMENT GUIDELINE	
BACKLASH MEASUREMENT	WHAT TO DO
Below 0.1 mm (.004 in)	Remove shim(s) and recheck backlash
Above 0.25 mm (.01 in)	Add shim(s) and recheck backlash

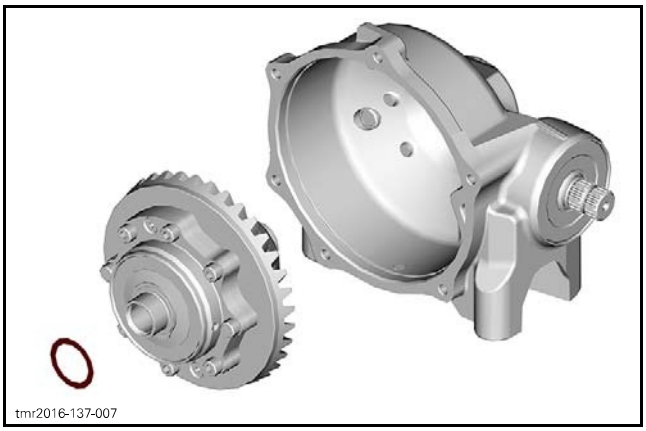

BACKLASH SHIM

Preload Inspection

Install the spline adapter tool on the pinion shaft.

REQUIRED TOOL
Spline driver (P/N 529036386)

Using a needle torque wrench, measure the drag torque.

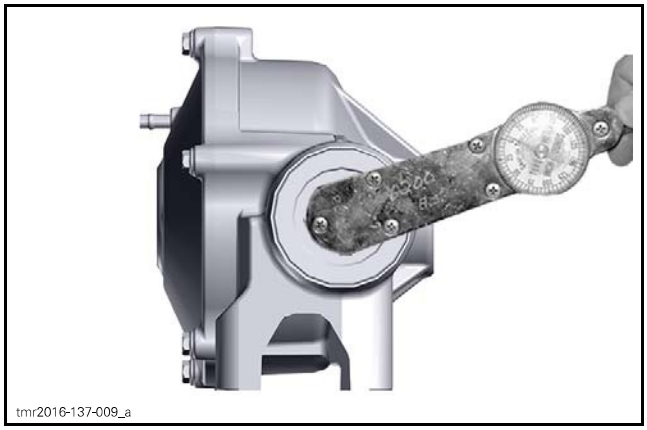

PRELOAD SPECIFICATION
Maximum 0.50 N•m (4 lbf•**in**)

If preload is out of specification, split front differential housing and check all bearings conditions.

Front Differential Disassembly

Differential Housing

1. Remove front differential housing screws.

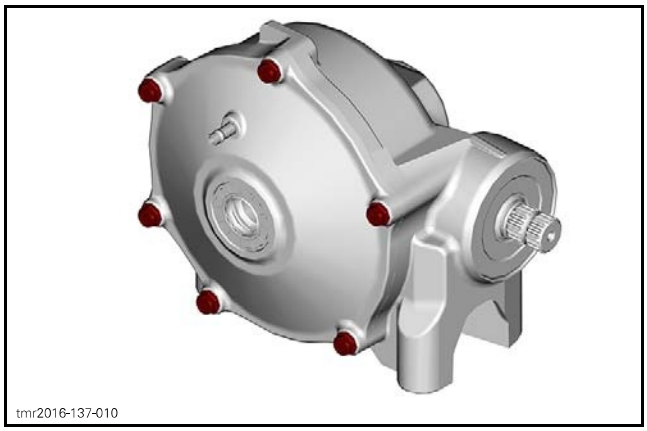

2. Separate half housings.
3. Remove oil seals.

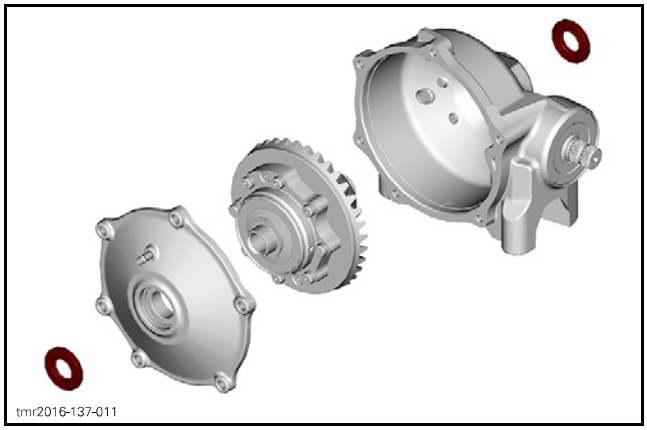

Visco-Lok Carrier/Ring Gear

1. Remove Visco-Lok carrier/ring gear out of half housing.

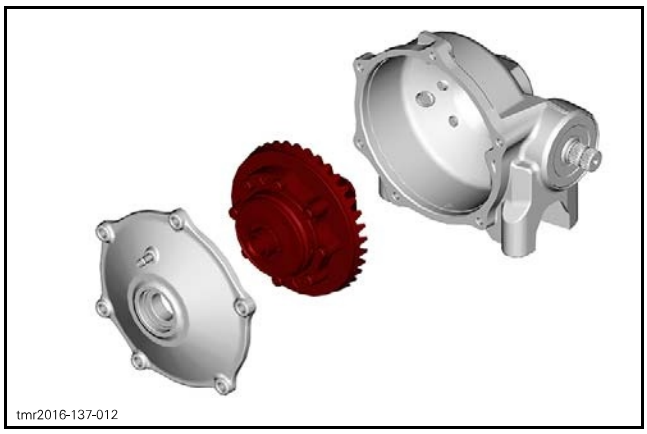
tmr2016-137-012

2. Remove screws securing ring gear to Visco-Lok unit.

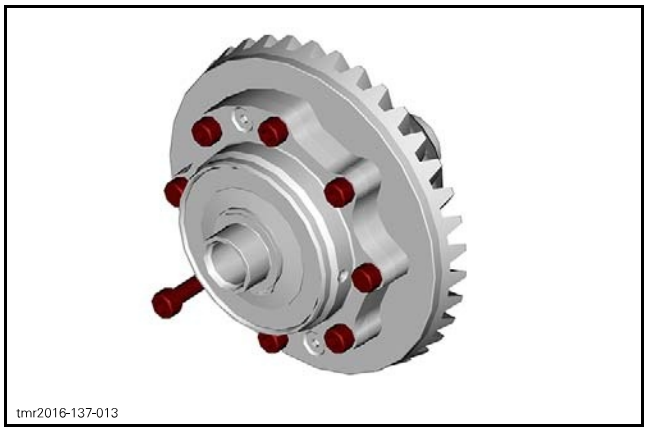
tmr2016-137-013

3. Separate ring gear from Visco-Lok unit.

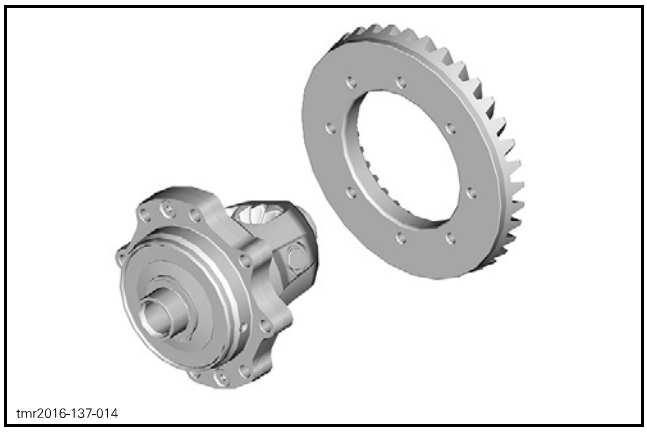
tmr2016-137-014

Pinion Gear

REQUIRED TOOL
Multifunctional differential tool (P/N 529036385)
Spline driver (P/N 529036386)

1. Remove and discard oil seal.

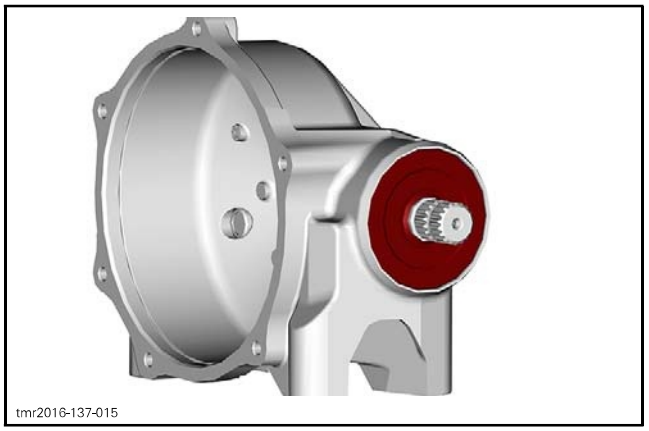
tmr2016-137-015

2. Unscrew the pinion nut.
   - 2.1 Lock the multifunctional tool with the pinion driver.
   - 2.2 Slide the tools until it engage the nut.
   - 2.3 Unscrew the nut.


tmr2016-137-016

3. Remove bearing and pinion gear together.

NOTE: If pinion is hard to pull out, attach the propeller shaft to it and pull while hitting the yoke with a soft hammer.

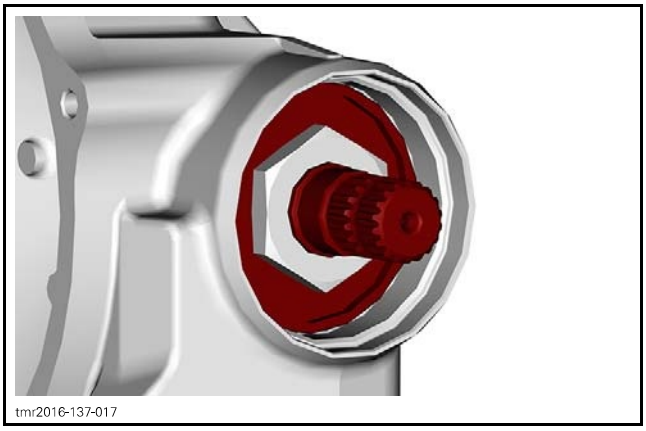
tmr2016-137-017

4. Remove nut from pinion.
   4.1 Install the multifunctional tool in a vice.
   4.2 Slide the spline driver on the pinion shaft.
   4.3 Slide the pinion and the spline driver in the multifunctional tool until the nut is engaged.
   4.4 Turn the spline driver clockwise to unscrew the pinion.

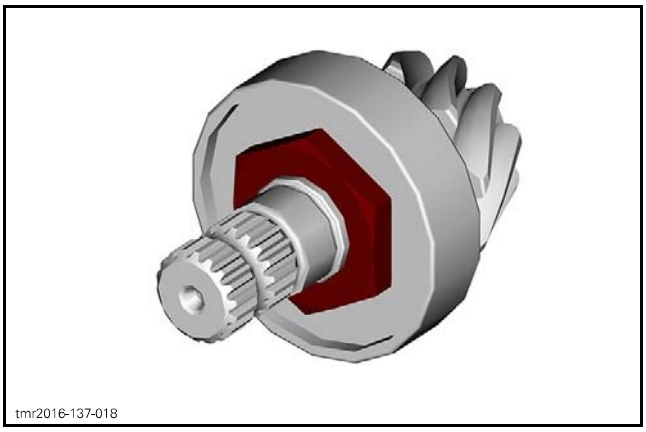
tmr2016-137-018

5. Remove bearing from pinion gear.

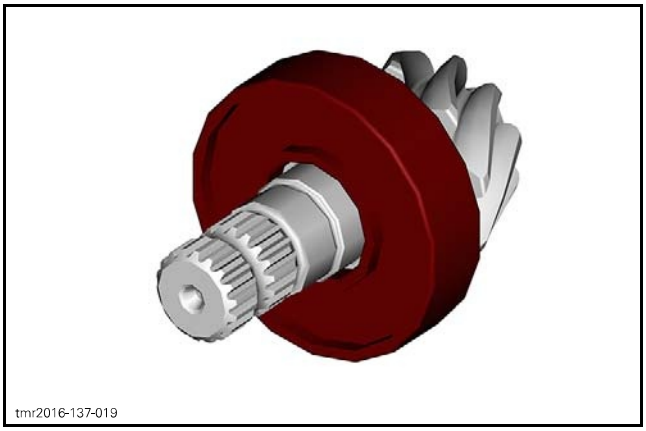
tmr2016-137-019

6. Remove and discard the needle bearing.

Front Differential Assembly

Adjustment is required when any of the following part is changed.
- Pinion gear
- Ring gear
- Viscolok unit
- Housing.

As a preliminary setup, install shim according to the following table.

RECOMMENDED SHIM THICKNESS	
BACKLASH	0.5 mm (.02 in) (as a preliminary adjustment)

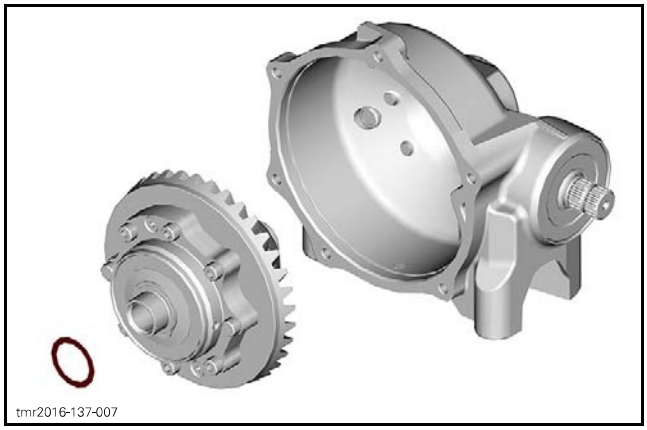
tmr2016-137-007

BACKLASH SHIM

Prior to finalizing assembly, proceed in this order:
- Temporarily assemble final drive using recommended torques.
- Do not apply thread locker product.
- Do not install a new pinion nut.
- Check backlash.
- Check preload.

Visco-Lok Carrier/Ring Gear

The installation is the reverse of the removal procedure. However, pay attention to the following.

Tighten Visco-Lok / ring gear screws to specification.

TIGHTENING TORQUE	
Visco-Lok / ring gear screws	37 N•m ± 3 N•m (27 lbf•ft ± 2 lbf•ft) + LOCTITE 277 (P/N 293 800 073)

Check condition of seal. Replace if damaged.

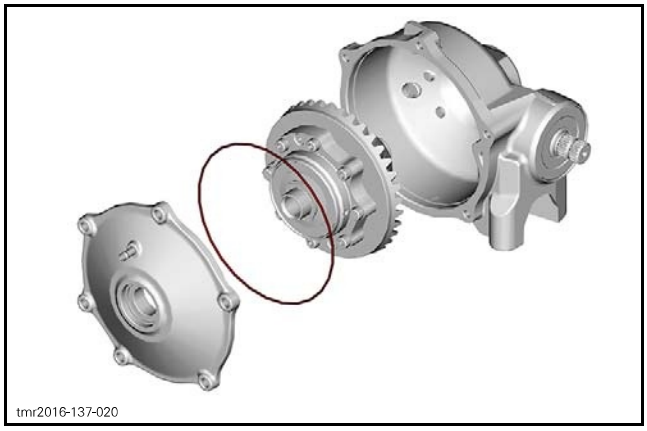

Check bearings. Replace with new bearings if necessary.

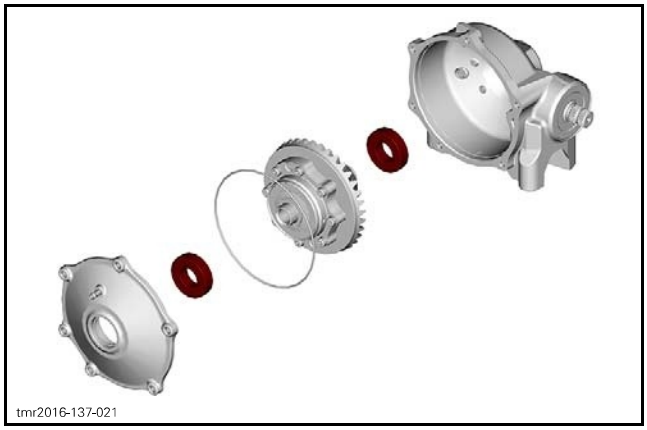

Apply XPS SYNTHETIC GREASE (P/N 293 550 010) on new oil seals and install.

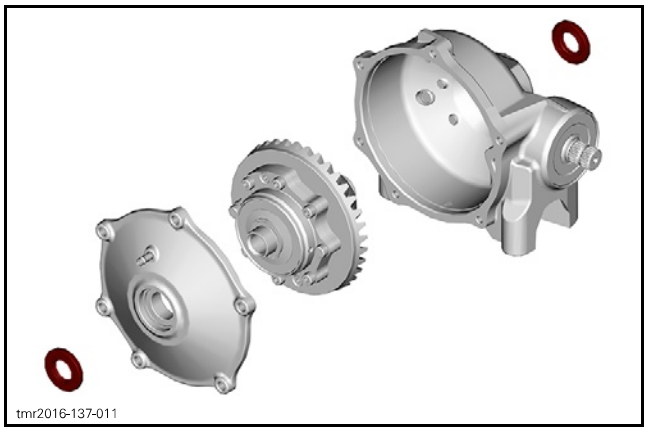

Tighten differential housing screws to specification.

TIGHTENING TORQUE	
Differential housing screws	23.5 N•m ± 3.5 N•m (17 lbf•ft ± 3 lbf•ft)

Pinion Gear

Install a new ball bearing.

Install a new O-ring.

Install a new needle bearing.

Apply LOCTITE 277 (P/N 293 800 073) to pinion nut.

Install and tighten the pinion nut to specification.

TIGHTENING TORQUE	
Pinion nut (housing and shaft)	203 N•m ± 13 N•m (150 lbf•ft ± 10 lbf•ft) + LOCTITE 277 (P/N 293 800 073)

Apply XPS SYNTHETIC GREASE (P/N 293 550 010) on new oil seal and install.

Installing the Front Differential

The installation is the reverse of the removal procedure. However, pay attention to the following.

TIGHTENING TORQUE	
Differential retaining screw	65 N•m ± 5 N•m (48 lbf•ft ± 4 lbf•ft)

Refill the front differential with recommended oil. Refer to *PERIODIC MAINTENANCE PROCEDURES* subsection.

REAR DRIVE

SERVICE TOOLS

Description	Part Number	Page
CV BOOT CLAMP PLIER	529 036 120	3
CV JOINT EXTRACTOR	529 036 005	3

SERVICE PRODUCTS

Description	Part Number	Page
XPS SYNTHETIC GREASE	293 550 010	3

Midwest Manuals
Green Manuals
Paperless Manuals
For a Better Tomorrow
If you bought this manual from any other seller please leave them
NEGATIVE feedback and notify me at bestshopmanuals@gmail.com

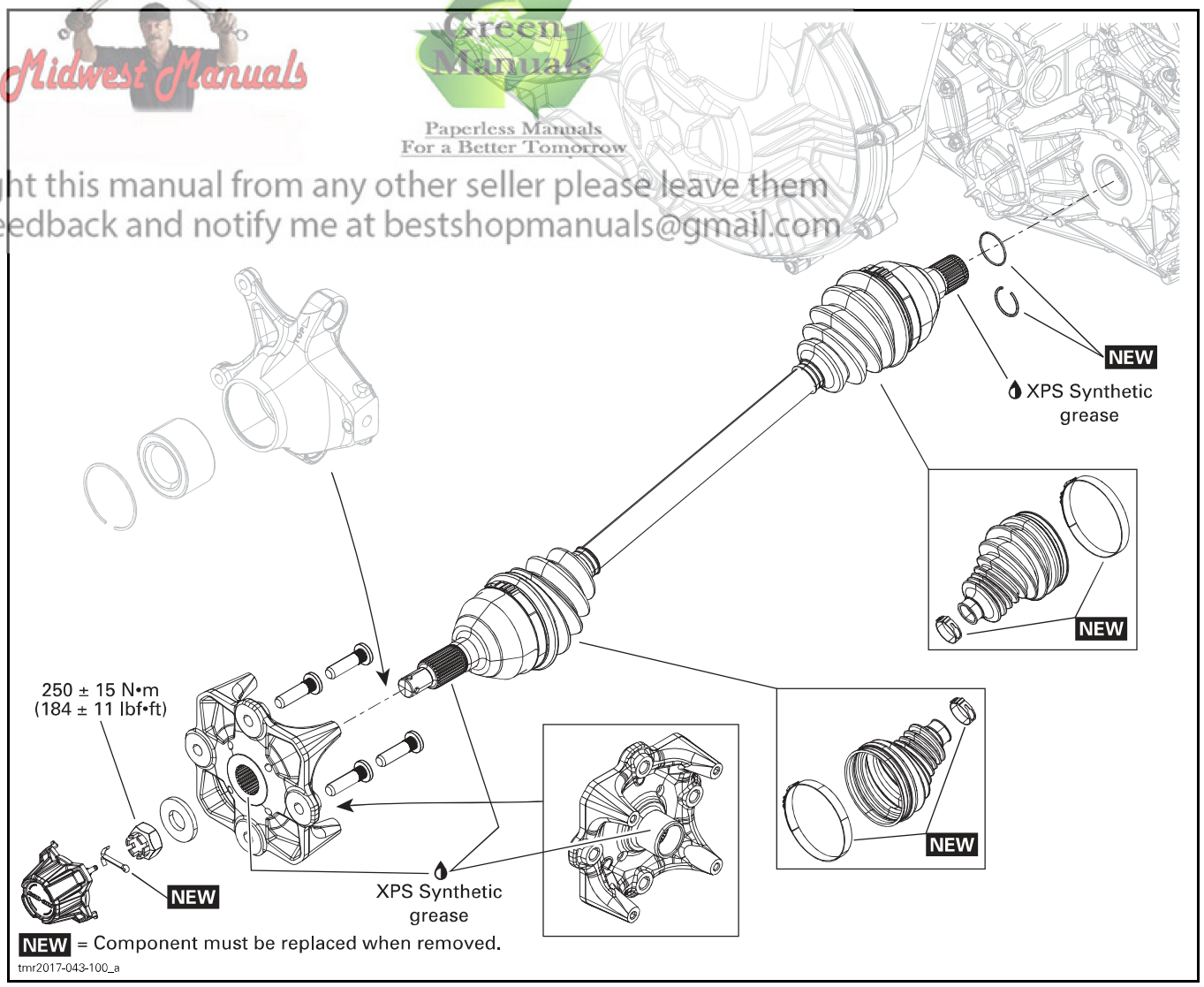

PROCEDURES

WHEEL HUB

Removing the Wheel Hub

1. Lift and support vehicle. Refer to *INTRODUCTION* section for proper procedure.
2. Select the 4WD position, place the transmission lever on "P".
3. Remove caliper from knuckle. Refer to *BRAKES* subsection.
4. Remove the following parts:
   – Cotter pin
   – Castellated nut
   – Belleville washer.

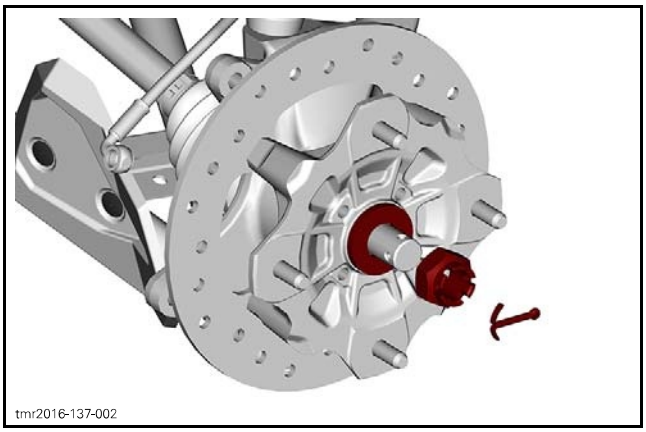

TYPICAL

5. Remove wheel hub.

Inspecting the Wheel Hub

Check wheel studs for damaged threads and overall conditions

Check wheel hub for cracks or other damages.

Check inner splines for wear or other damages.

Replace wheel hub and / or studs if any damage is detected.

Installing the Wheel Hub

The installation is the reverse of removal procedure. However, pay attention to the following.

Apply (P/N 293 550 010) all around drive shaft and wheel hub splines, and on the outer cylindrical surface.

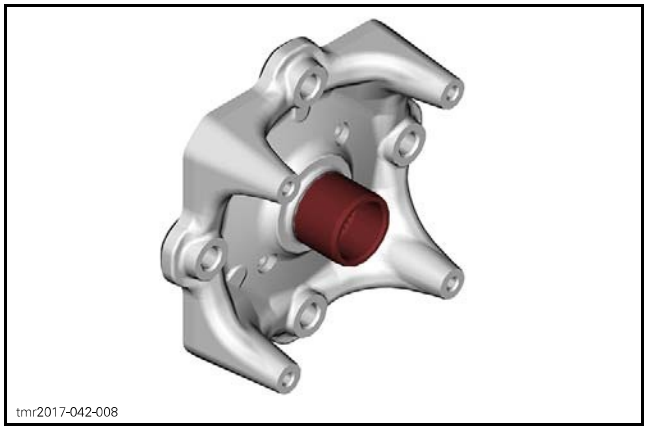

Install Belleville washer with its domed side outwards.

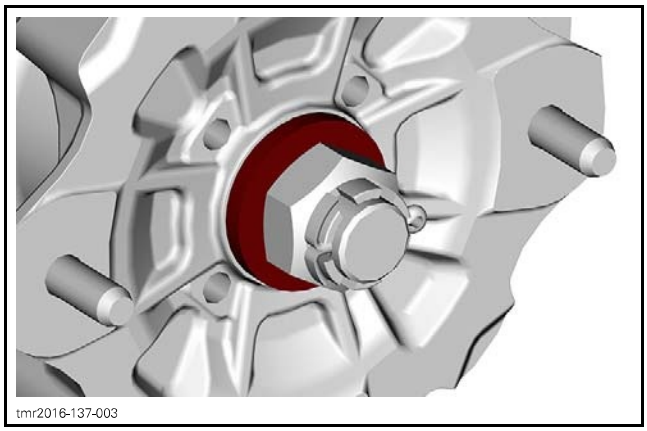

TYPICAL

TIGHTENING TORQUE	
Castellated nut	250 N•m ± 15 N•m (184 lbf•ft ± 11 lbf•ft)

NOTE: Tighten further castellated nut if required to align grooves with drive shaft hole.

Install a new cotter pin.

DRIVE SHAFT

Removing the Rear Drive Shaft

1. Remove the wheel hub. Refer to procedure in this subsection.
2. Remove the knuckle. Refer to *REMOVING THE SUSPENSION ARMREAR SUSPENSION* subsection.
3. Strongly pull drive shaft out of gearbox.

NOTE: Keep track of the O-ring between the drive shaft and the gearbox.

4. Discard the stop ring at the end of the shaft.

Inspecting the Rear Drive Shaft

Inspect the condition of boots. If there is any damage or evidence of leaking lubricant, replace them. Refer to *DRIVE SHAFT BOOT*.

Check splines for excessive wear. Replace if necessary.

NOTE: If the splines on the drive shaft joint are worn, a check of differential inner splines should be done.

Installing the Rear Drive Shaft

The installation is the reverse of the removal procedure. However, pay attention to the following.

Install a new stop ring.

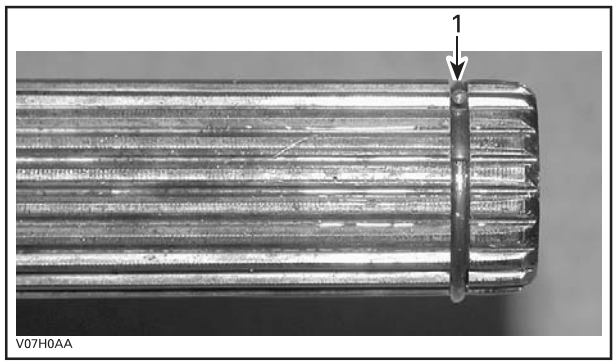

1. Stop ring

Apply XPS SYNTHETIC GREASE (P/N 293 550 010) all around splines at both ends.

Ensure the O-ring is properly installed.

DRIVE SHAFT BOOT

Removing the Drive Shaft Boot

1. Remove the drive shaft from the vehicle.
2. Remove drive shaft boot clamps.

REQUIRED TOOL	
CV BOOT CLAMP PLIER (P/N 529 036 120)	

3. Dislodge the large boot end.
4. Separate the joint from the shaft. Two procedures can be done.

Without the Special Tool

1. Clamp joint housing in a vise.
2. Align shaft with joint.
3. Pull hard on shaft to remove from joint.
4. Remove boot from drive shaft.
5. Remove and discard the circlip.

With the Special Tool

REQUIRED TOOL	
CV JOINT EXTRACTOR (P/N 529 036 005)	

1. Place drive shaft in vice with the joint downward.
2. Install the cv joint extractor on the bearing.

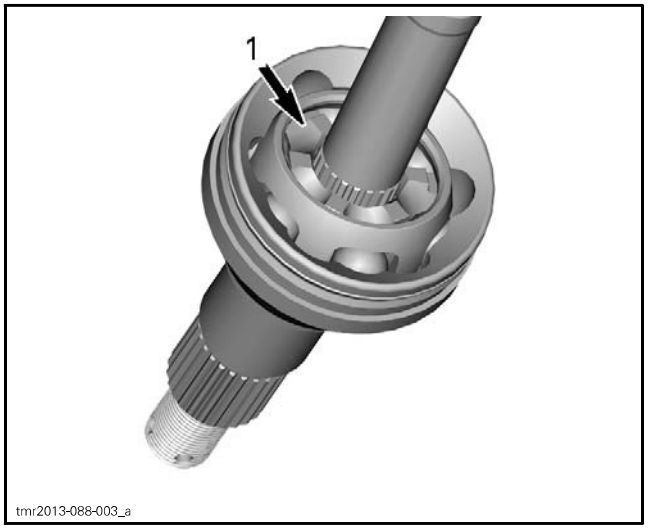

TYPICAL - CV JOINT SHOWN
1. Position joint extractor tool here

3. With a hammer, hit on the tool to separate joint from shaft.
4. When joint and shaft are separated, remove boot from drive shaft.
5. Remove and discard the circlip.

Installing the Drive Shaft Boot

The installation is the reverse of the removal procedure. However, pay attention to the following.

Install the new circlip.

Pack bearing area and inside of the drive shaft boot with grease included with the new boot kit.

NOTE: Do not use or add other grease.

STEERING SYSTEM

SERVICE TOOLS

Description	Part Number	Page
STEERING ALIGNMENT TOOL	529 036 059	3

SERVICE PRODUCTS

Description	Part Number	Page
LOCTITE 767 (ANTISEIZE LUBRICANT)	293 800 070	9–10, 12
XPS SYNTHETIC GREASE	293 550 010	9

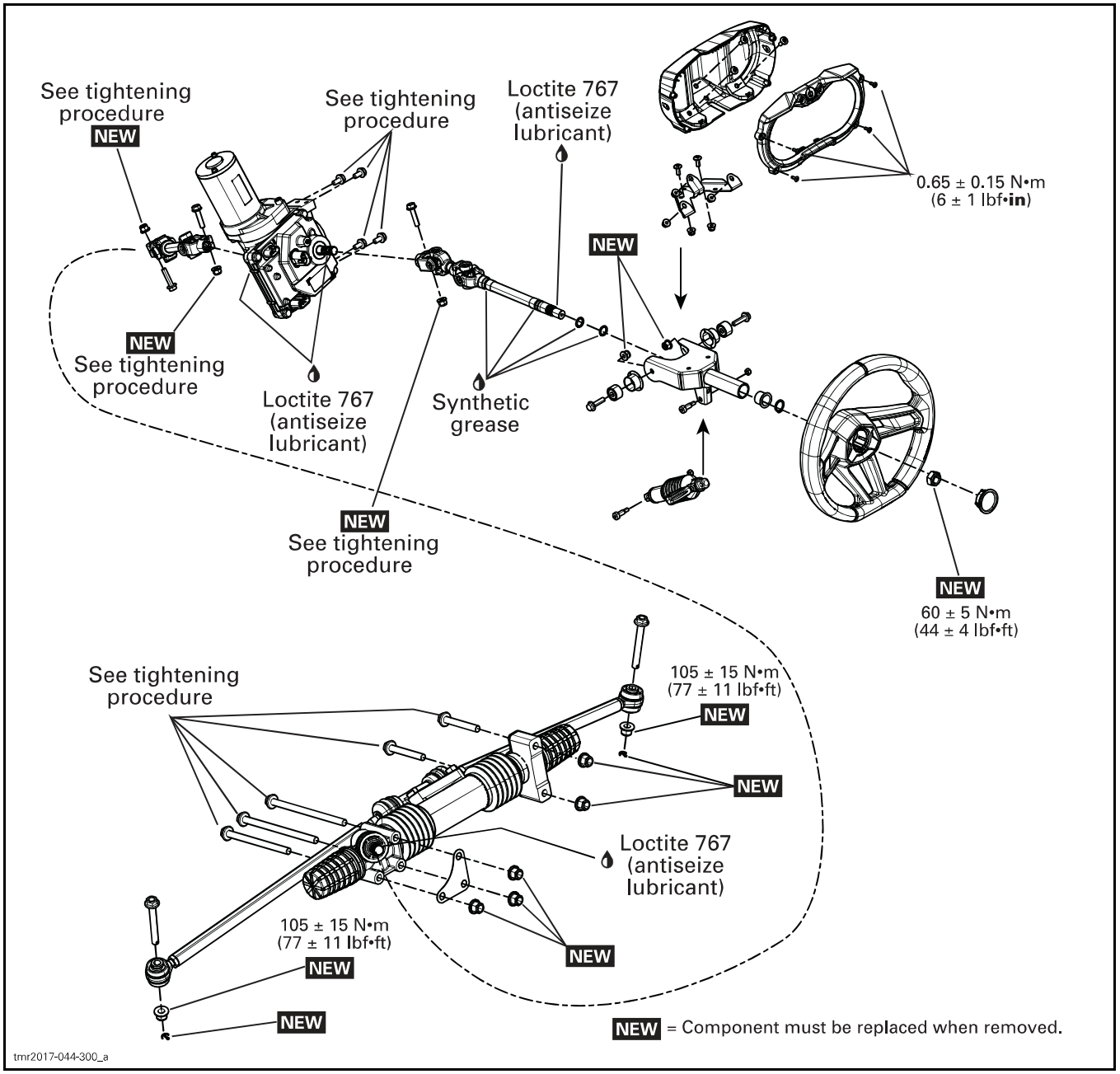

GENERAL

NOTICE Never perform arc welding in the DPS area. Otherwise, poor DPS operation might occur.

ADJUSTMENT

ALIGNING THE STEERING COMPONENTS

IMPORTANT: This procedure may solve most of the DPS steering issues and must be carried out before a torque offset reset procedure.

NOTE: The steering components alignment procedure will ensure that no axial or radial loads are applied to the DPS shaft which would result in poor DPS operation. All steering components must be aligned with the rack and pinion, and torqued starting from the rack and pinion, then upwards sequentially to each component from there.

1. Ensure the rack and pinion is centered. Refer to *ALIGNING THE WHEELS*.
2. Ensure steering wheel is within 8° of horizontal position.
3. Loosen the fasteners retaining the following steering components sufficiently to provide free movement of the component:
   - Pinch bolts on upper and lower steering column U-joints
   - All fasteners on the DPS support.
4. Re-torque the fasteners to specification using the specified sequence. Refer to *STEERING SYSTEM TIGHTENING SEQUENCE* in this subsection.
5. Perform the *STEERING SYSTEM SELF TEST* procedure in this subsection.

NOTICE The steering system tightening sequence **must be strictly followed.** Failure to do so may result in a steering component misalignment, poor DPS operation due to an induced erroneous torque on DPS shaft, or the impossibility to perform a torque sensor reset. A magnetized component in contact with DPS shaft might also affect the ability to reset the torque sensor.

IMPORTANT: Make sure the pinch bolt is engaged in the shaft groove where applicable.

6. Carry out a steering alignment, refer to *ALIGNING THE WHEELS* if needed.

ALIGNING THE WHEELS

1. Place vehicle on a level surface.
2. Inflate tires to recommended pressure.
3. Find rack and pinion center to center as follows:
   - 3.1 Calculate the total steering wheel rotations from side to side.
   - 3.2 Position the steering wheel at **half** the total rotations.
4. Check steering wheel position:
   - 4.1 If steering wheel is centered (within ± 3°), go to **step 6**.
   - 4.2 If steering wheel is off center of more than 3°, go to **step 5**.

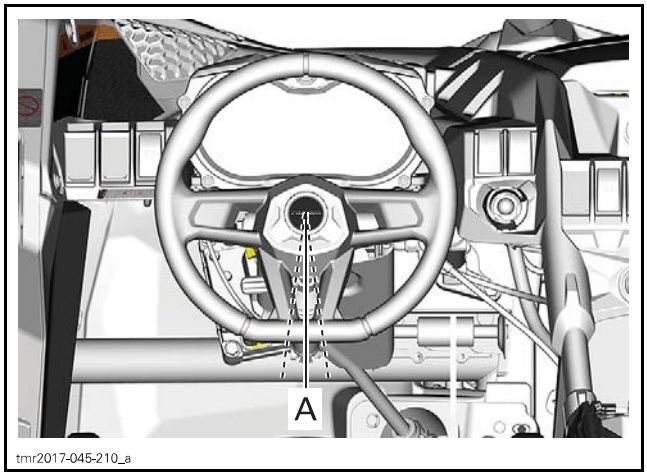

A. Steering wheel angle ± 3°

5. Reposition steering wheel on steering shaft as follows:

   NOTICE Make sure rack and pinion does not move during steering wheel repositioning.

   - 5.1 Remove steering wheel, refer to *REMOVING THE STEERING WHEEL*.
   - 5.2 Reinstall steering wheel to the closest centered position.
6. Center steering wheel.

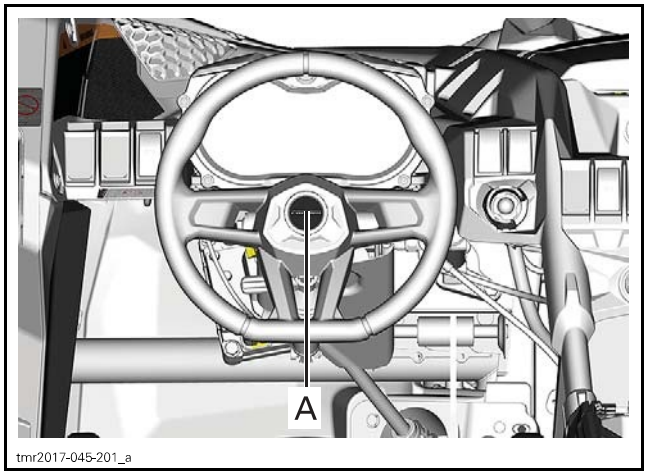

A. Steering wheel centered

7. Remove two wheel lug nuts from a rear wheel.
8. Install STEERING ALIGNMENT TOOL (P/N 529 036 059) using proper spacers.

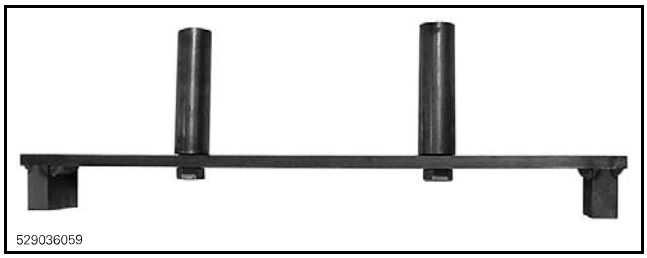

9. Move vehicle to place the tool level with the ground.

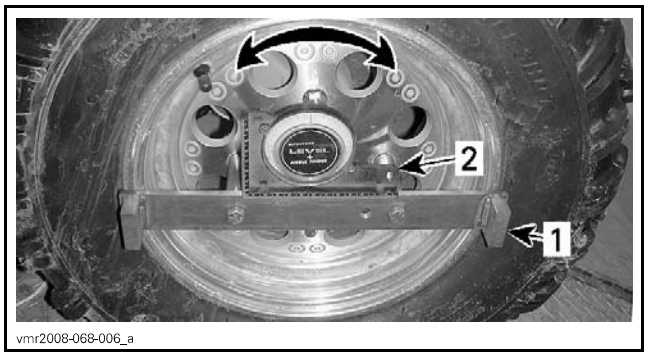

REAR WHEEL
1. Steering adjustment tool
2. Angle gauge or level

10. Place a rope around vehicle tires
11. Using an elastic, link both ends together.
12. Adjust rope at the center of the wheels.
13. From the front of vehicle, near the front of rim, move rope so that it does not touch the first spacer of tool.

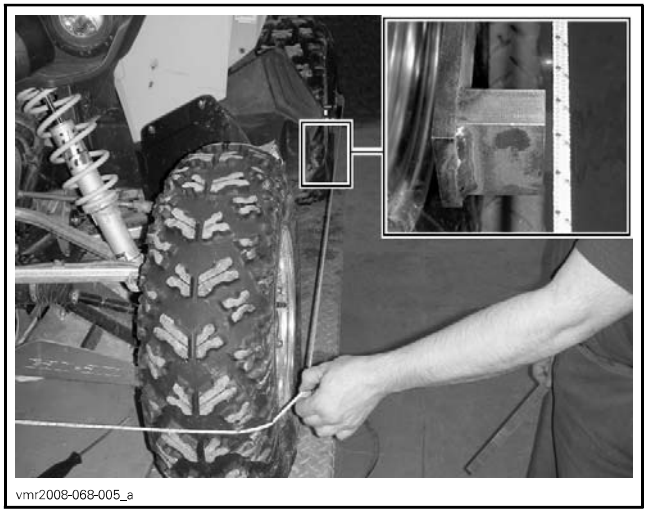

TYPICAL

14. Slowly move rope back until it makes contact with spacer.



TYPICAL

15. Keep rope in this position.
16. Measure distance of the front wheel between rope and rim as follows:
    - At the front of rim
    - At the rear of rim.

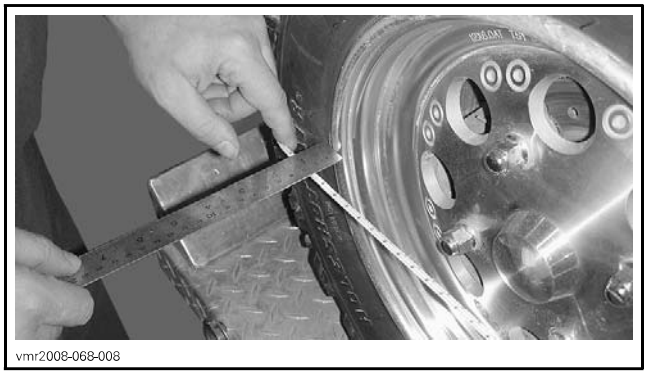

TYPICAL — AT THE FRONT OF RIM



TYPICAL — AT THE REAR OF RIM

17. Calculate the difference between the rear and the front measurement.
18. The difference must be as per the following specification:

TOE OUT
7.7 mm ± 5.1 mm (.303 in ± .201 in)

19. If the wheel toe measurement is out of specification adjust tie-rod length. Refer to *ADJUSTING TOE*.
20. Repeat procedure for the other wheel.

Adjusting Toe

1. If the front wheel toe measurement is out of specification lock steering wheel at center.
2. Place one mark on each (LH and RH) tire with a chalk. The marks must be at the same height (measured) on each front tire.

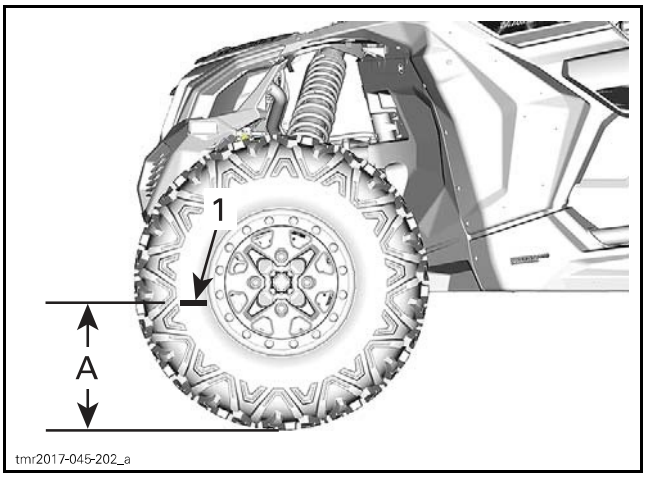

FRONT LH VIEW
1. Mark tire
A. Distance from ground to mark

3. Measure and note the distance between the center of the wheels, level with the marks on the tires.

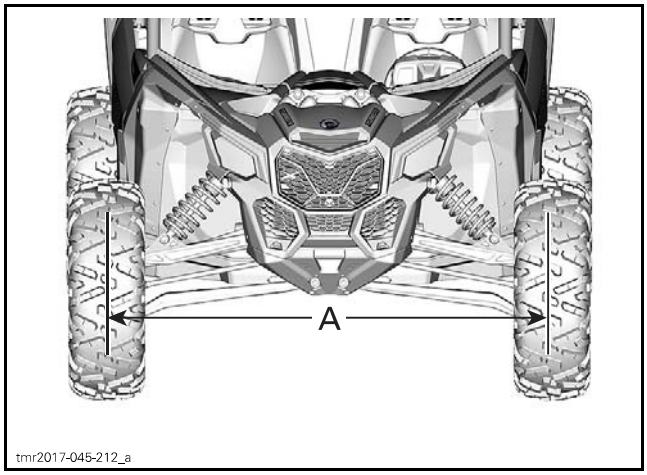

FRONT VIEW
A. Measure distance

4. Roll vehicle forward so that the tires make a complete a 180° rotation.

NOTE: Distance from ground **no. B** to mark on tire must equal distance from ground **no. A** in step 2 for a proper measurement.

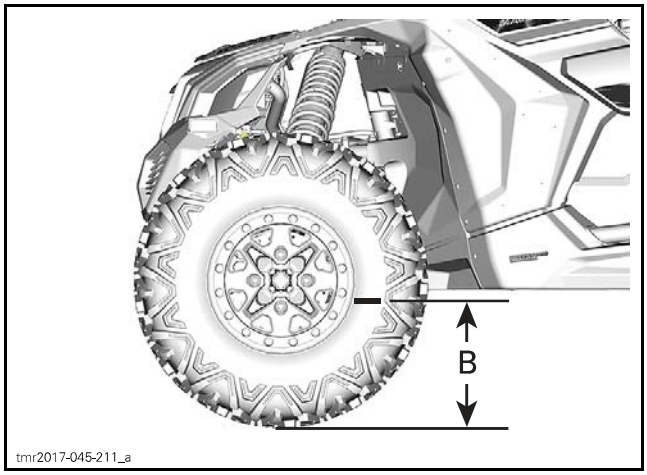

FRONT LH VIEW AFTER ROTATION

5. Measure and note the distance between the same two marks as step 3.
6. Calculate the difference between the front and the rear measurements.
7. Loosen tie-rod end locking nut.

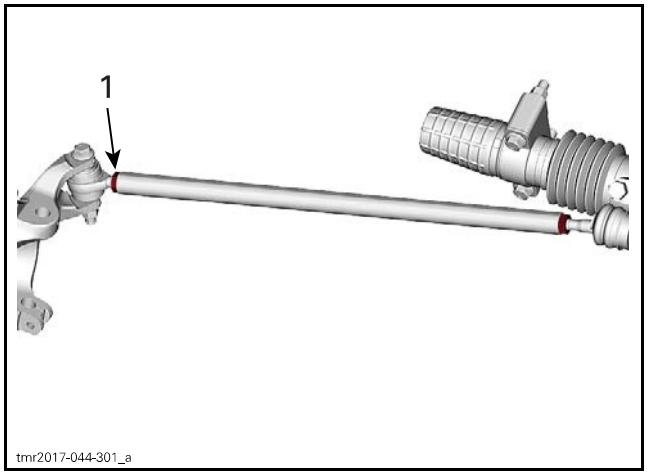

1. Tie-rod end locking nut

8. Turn tie-rod adjustment sleeve until distance measured in step 2 is equal for each wheel.

NOTE: Adjustment sleeve and inner tie rod will turn together.

⚠ WARNING

The minimum inner tie-rod and tie rod end engagement in adjustment sleeve must be 25 mm (1 in).

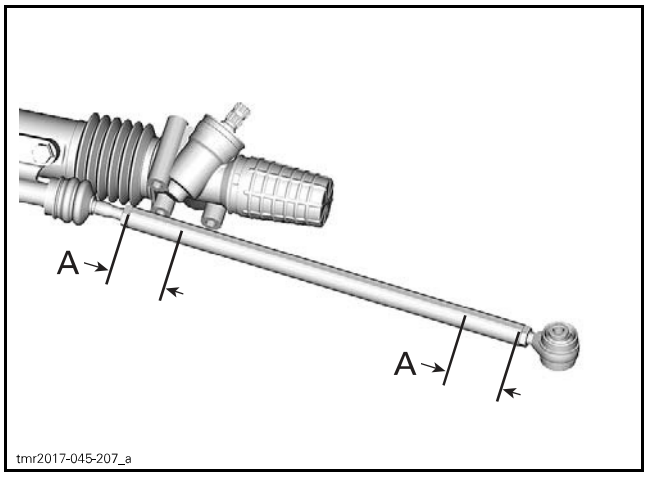

A. Minimum engagement length

9. Tighten tie-rod adjustment sleeve locking nuts to specification.

TIGHTENING TORQUE	
Tie-rod end locking nut	34 N•m ± 2 N•m (25 lbf•ft ± 1 lbf•ft)

10. Recheck that vehicle toe is within limits by repeating procedure.

TROUBLESHOOTING

CUSTOMER COMPLAINT ABOUT THE STEERING SYSTEM

1. **DPS or mechanical failure.**
   - *Refer to TROUBLESHOOTING in the DPS subsection.*

UNEQUAL TURNING RADIUS

1. **Rack and pinion not centered during steering system parts installation.**
   - *Refer to ALIGNING THE WHEELS in this subsection.*

PROCEDURES

STEERING SYSTEM TIGHTENING SEQUENCE

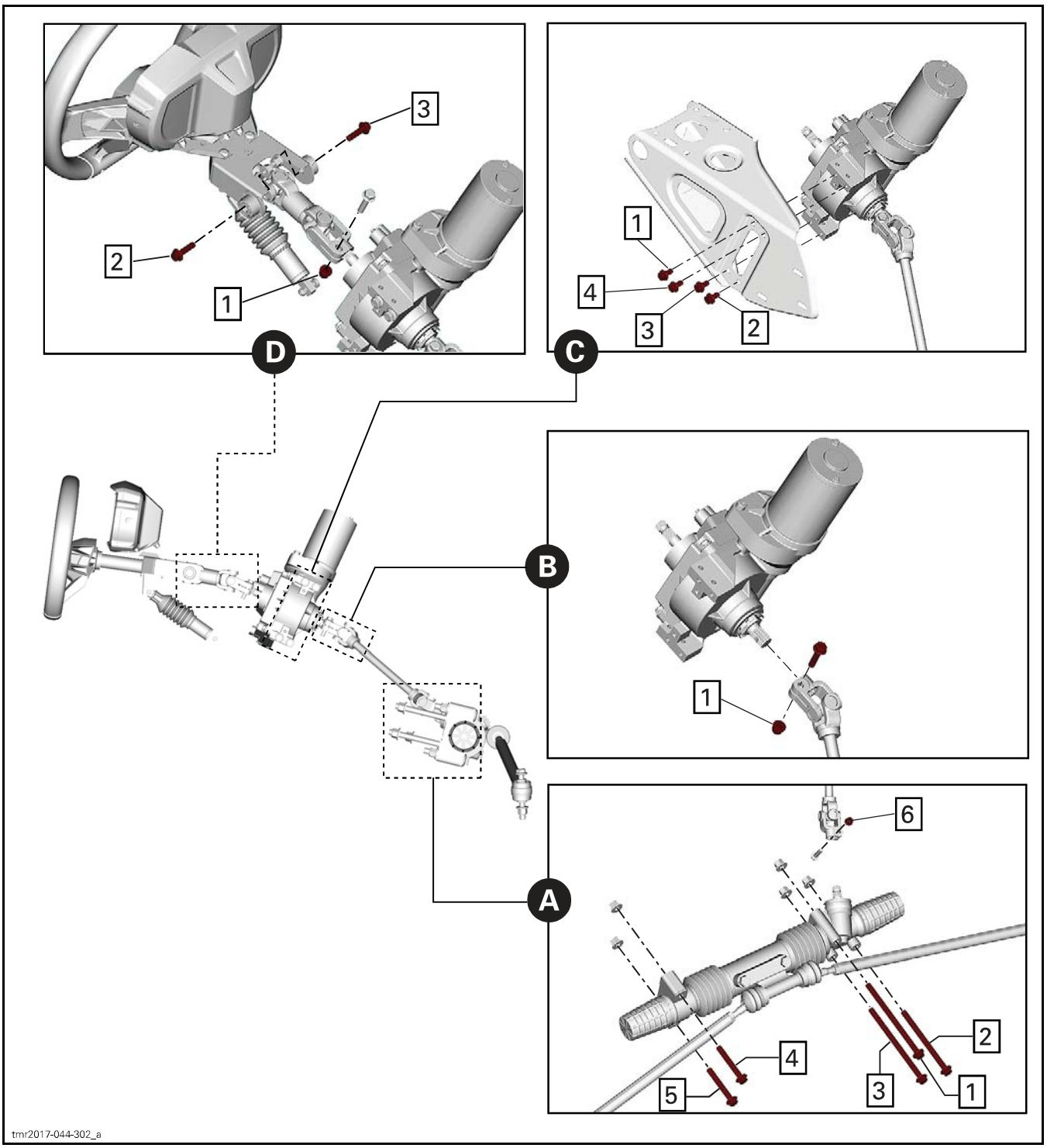

TIGHTENING TORQUE			
STEP A	no. 1 - 5	Apply torque on bolts	105 N•m ± 15 N•m (77 lbf•ft ± 11 lbf•ft)
	no. 6	Apply torque on nut	35 N•m ± 3 N•m (26 lbf•ft ± 2 lbf•ft)
STEP B	no. 1	Apply torque on nut	35 N•m ± 3 N•m (26 lbf•ft ± 2 lbf•ft)
STEP C	no. 1 - 4	Apply torque on bolts	24.5 N•m ± 3.5 N•m (18 lbf•ft ± 3 lbf•ft)
STEP D	no. 1	Apply torque on nut	35 N•m ± 3 N•m (26 lbf•ft ± 2 lbf•ft)
	no. 2 - 3	Apply torque on bolts	24.5 N•m ± 3.5 N•m (18 lbf•ft ± 3 lbf•ft)

STEERING WHEEL

Removing the Steering Wheel

1. Remove steering wheel cap using a small screwdriver.
2. Remove nut securing steering wheel to shaft. Discard the nut.
3. Remove steering wheel by pulling it upwards.

Installing the Steering Wheel

The installation is the reverse of the removal procedure. However, pay attention to the following.

Prior to installing the steering wheel, place front wheels parallel with the vehicle.

Tighten steering wheel retaining nut to specification.

TIGHTENING TORQUE	
Steering wheel nut	60 N•m ± 5 N•m (44 lbf•ft ± 4 lbf•ft)

Check front wheel alignment. Refer to *ALIGNING THE WHEELS* in this subsection.

STEERING SHAFT

Removing the Steering Shaft

1. Remove the steering wheel. See procedure in this subsection.

NOTE: Remove steering wheel only if the steering shaft must be replaced.

2. Remove the multifunction gauge.
   2.1 Remove the gauge trim.

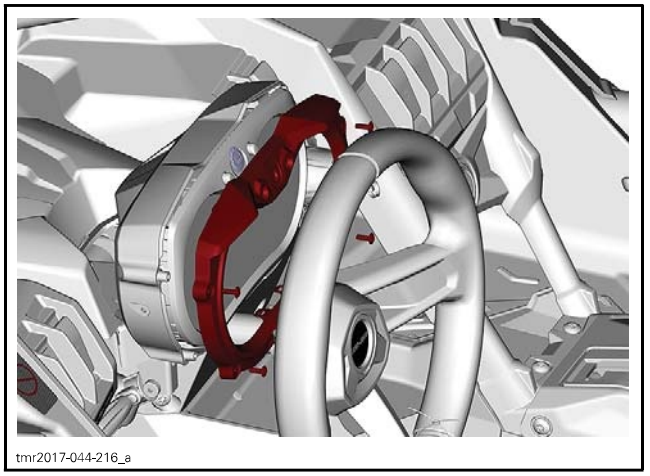
tmr2017-044-216_a

2.2 Unplug and remove the gauge.

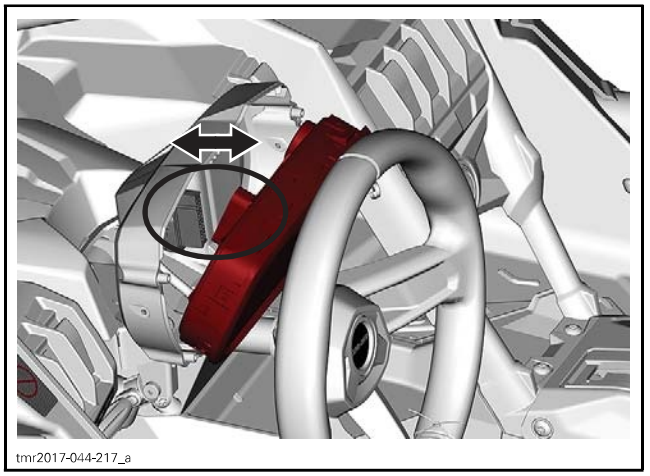
tmr2017-044-217_a

3. Remove the bolt securing the bottom of the tilt mechanism shock.

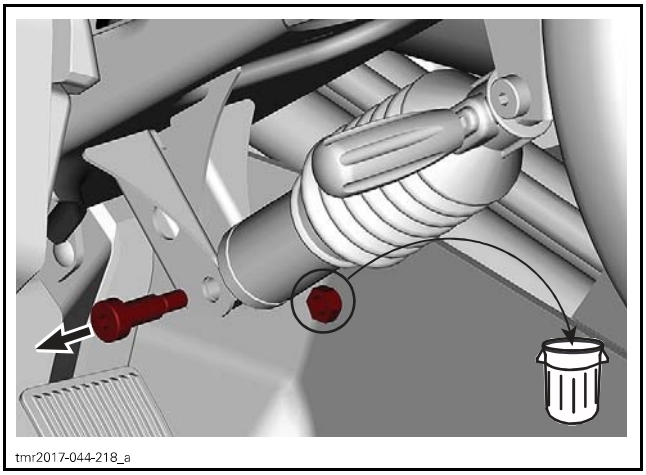
tmr2017-044-218_a

4. Remove bolts retaining the pivot support of the tilt mechanism.

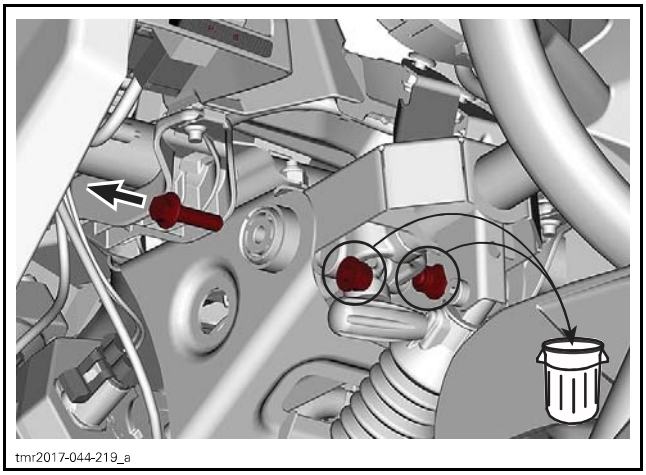
tmr2017-044-219_a

5. Remove the pinch bolt securing the steering shaft to the DPS.

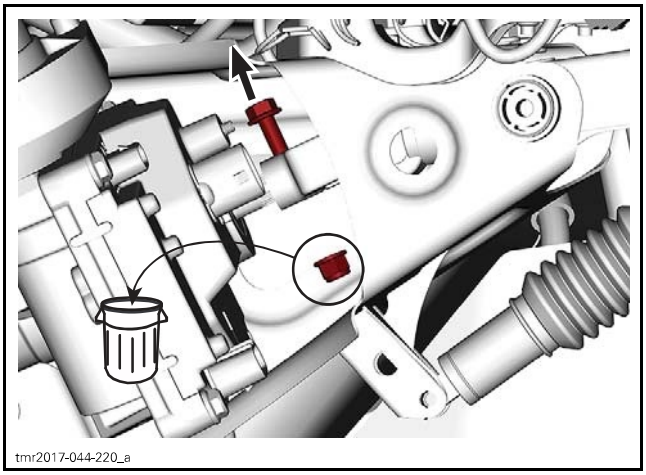
tmr2017-044-220_a

6. Pull steering wheel to extract the steering shaft with the tilt mechanism.

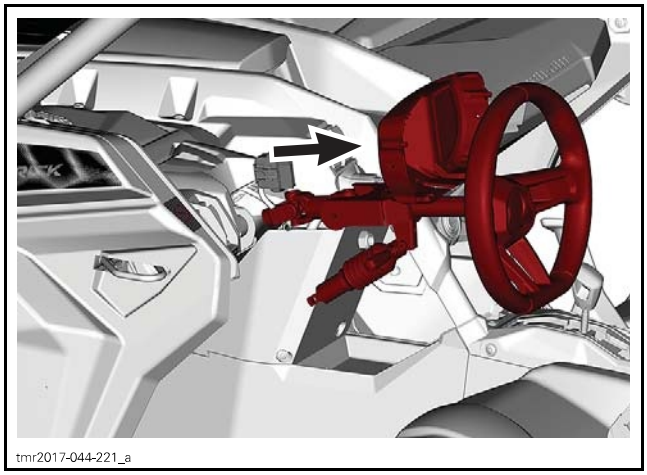
tmr2017-044-221_a

7. Remove circlip retaining the steering shaft to its support.

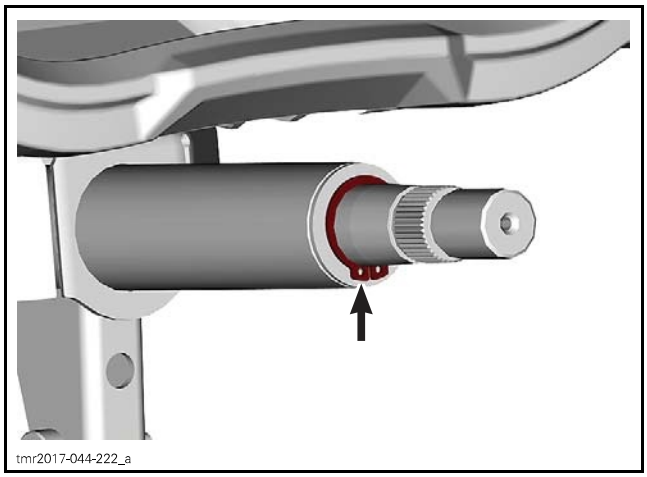
tmr2017-044-222_a

8. Remove steering shaft.

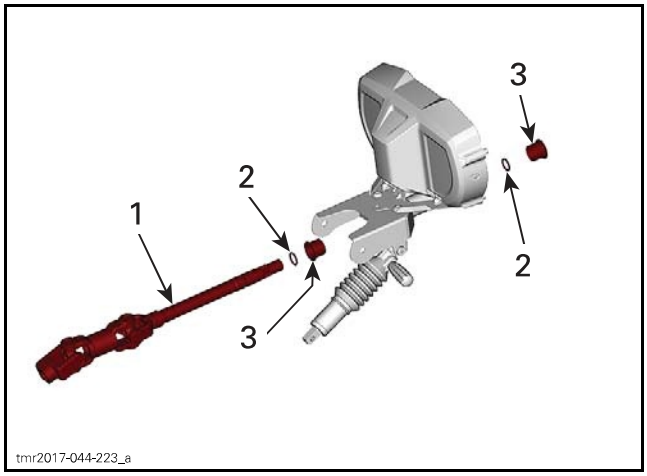

tmr2017-044-223_a

1. Steering shaft
2. O-rings
3. Bushings

Inspecting the Steering Shaft

Inspect if steering shaft is not bent or twisted.

Check steering shaft splines for wear or damage.

Check U-joint crosses. They should rotate smoothly without any play.

Replace shaft if required.

Installing the Steering Shaft

The installation is the reverse of the removal procedure. However, pay attention to the following details.

Prior to installing the steering shaft, place front wheels parallel with the vehicle.

Apply

Lubricate O-rings on steering shaft, and all around steering shaft on both side of O-rings.

STEERING SHAFT LUBRICATION
XPS SYNTHETIC GREASE (P/N 293 550 010)

Make sure bushings are well inserted in the steering shaft support.

ALign indexation spline on DPS shaft with the mark on the DPS housing.

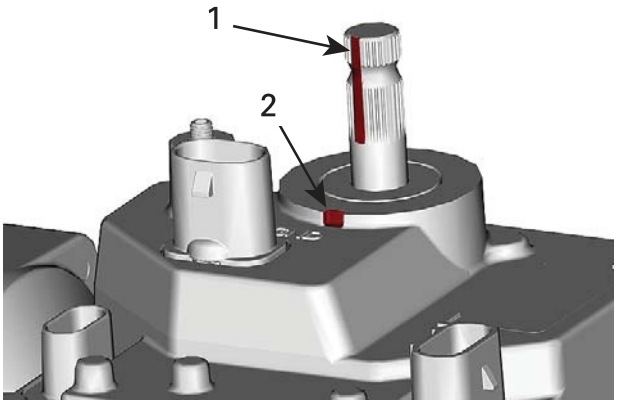

1. *Indexation spline*
2. *DPS housing mark*

Apply LOCTITE 767 (ANTISEIZE LUBRICANT) (P/N 293 800 070) on splines.

Install steering shaft U-joint on DPS shaft. Align the large tooth of the steering shaft U-joint with the indexation spline of the DPS shaft.

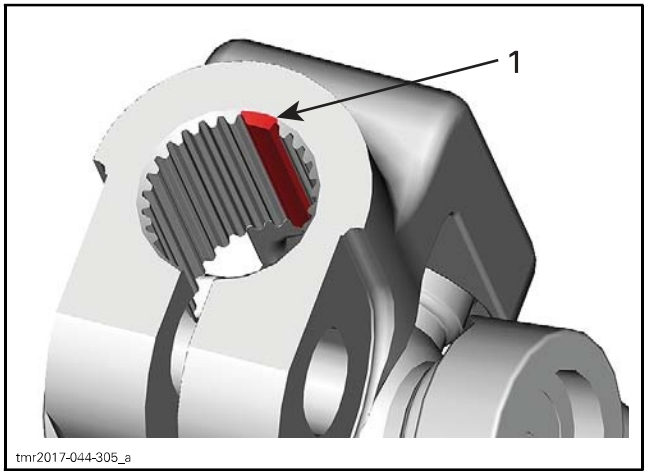

1. *Large tooth*

Install pinch bolt. Do not torque yet.

Install bolts retaining the pivot support of the tilt mechanism.

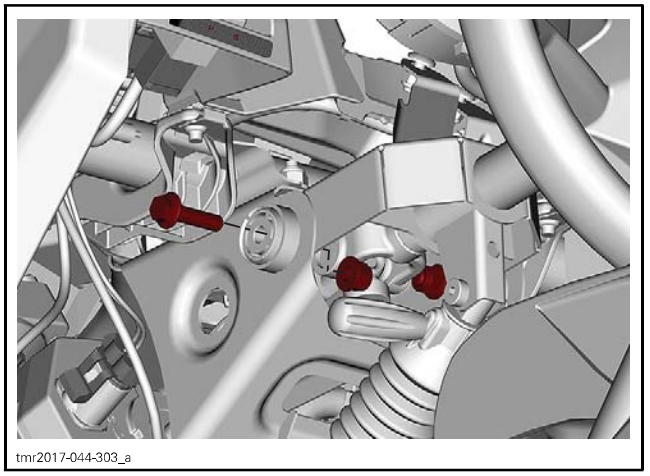

IMPORTANT: Before tightening U-joint pinch nut, pull steering shaft to verify if the pinch bolt is correctly inserted in the DPS shaft groove.

Tighten pinch nut of steering shaft to specification.

TIGHTENING TORQUE	
Steering shaft pinch nut	35 N•m ± 3 N•m (26 lbf•ft ± 2 lbf•ft)

Reinstall all other removed parts.

STEERING COLUMN

Removing the Steering Column

1. Remove pinch bolt securing the upper U-joint of the steering column.

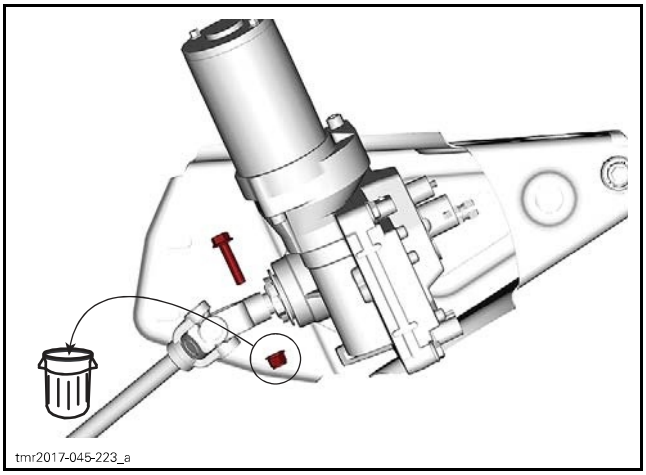
tmr2017-045-223_a

2. From inside of the vehicle, remove the steering column rubber protector. Cut locking tie securing the protector on rack and pinion.

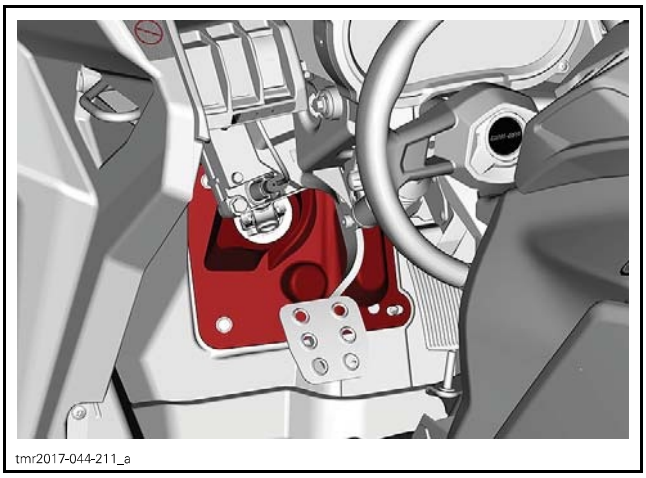
tmr2017-044-211_a

3. Remove pinch bolt from steering column lower U-joint.

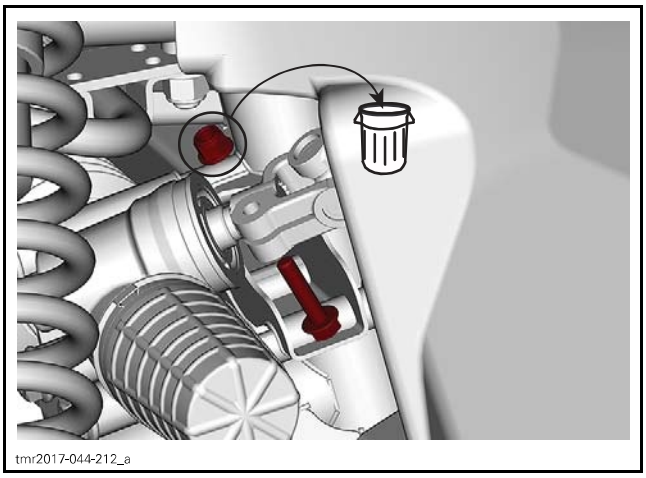
tmr2017-044-212_a

4. Loosen the bolts securing rack and pinion to frame.

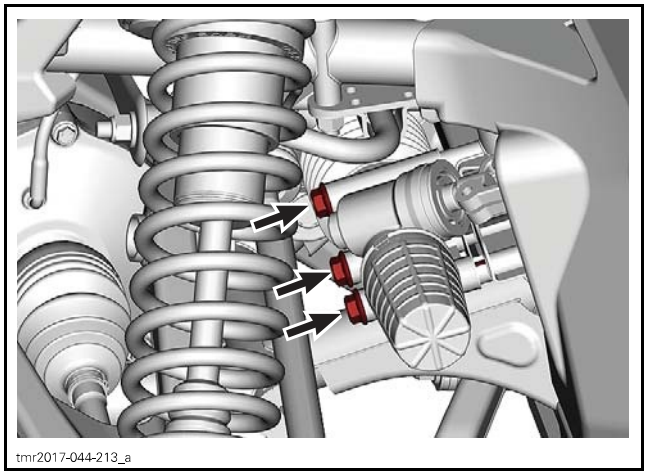
tmr2017-044-213_a

LH SIDE OF VEHICLE

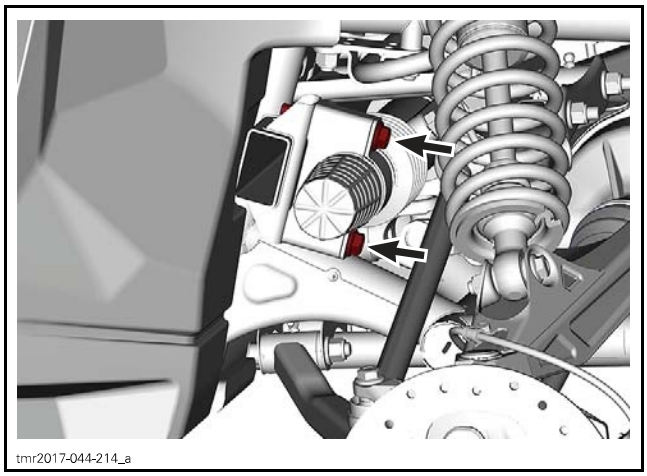
tmr2017-044-214_a

RH SIDE OF VEHICLE

5. Remove the steering column.

Inspecting the Steering Column

Check steering column for wear, twisting or bending.

Ensure universal joints are not worn and move freely.

Replace steering column if necessary.

Installing the Steering Column

The installation is the reverse of the removal procedure. However, pay attention to the following.

Prior to installing the steering column, position front wheels parallel with the vehicle.

Apply LOCTITE 767 (ANTISEIZE LUBRICANT) (P/N 293 800 070) on splines.

Position steering column in vehicle and insert upper U-joint on DPS output shaft.

Loosely install a M8 pinch bolt with a new M8 nut to secure the upper U-joint.

Engage the pinion shaft of the rack and pinion in the lower steering column U-joint. Make sure steering wheel remains centered.

Loosely install rack and pinion retaining bolts.

Loosely reinstall the M8 pinch bolt with a new M8 nut to secure the lower U-joint.

Tighten all fasteners as outlined in *STEERING SYSTEM TIGHTENING SEQUENCE*.

NOTICE **The steering system tightening sequence must be strictly followed. Failure to do so may result in a steering component misalignment, poor DPS operation due to an induced erroneous torque on DPS shaft, or the impossibility to perform a torque sensor reset.**

Check front wheel alignment. Refer to *ALIGNING THE WHEELS* in this subsection.

Install all other removed parts.

RACK AND PINION

Servicing the Rack and Pinion

The rack and pinion cannot be serviced except for replacement of the boots and tie rods.

Removing the Rack and Pinion

1. Safely lift and support the front of vehicle. Refer to *INTRODUCTION* subsection.
2. Remove both front wheels.
3. Detach tie-rod ends from knuckles. Refer to *REPLACING THE TIE ROD END* in this subsection.
4. On the LH side of the vehicle, detach the stabilizer bar link from the stabilizer bar.

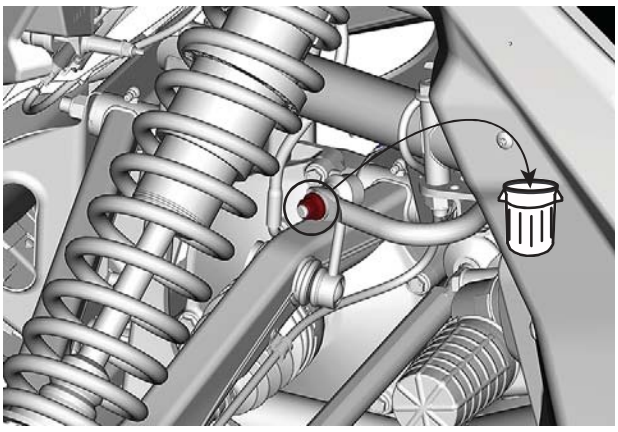
tmr2017-044-209_a

5. Detach the shock absorber from the suspension arm.

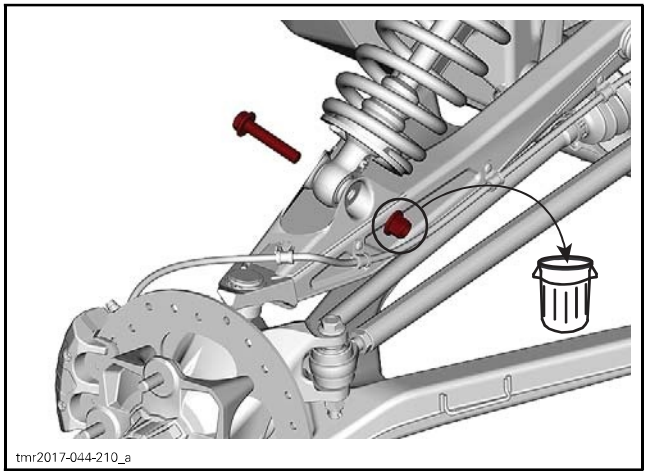
tmr2017-044-210_a

6. From inside of the vehicle, remove the steering column rubber protector. Cut locking tie securing the protector on rack and pinion.

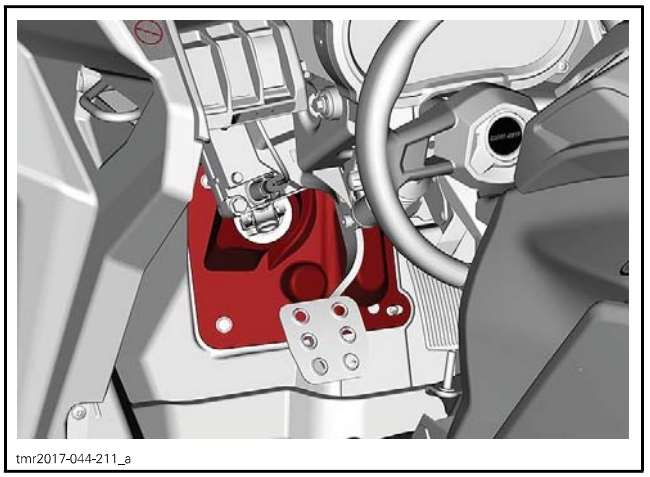
tmr2017-044-211_a

7. Remove pinch bolt from steering column lower U-joint.

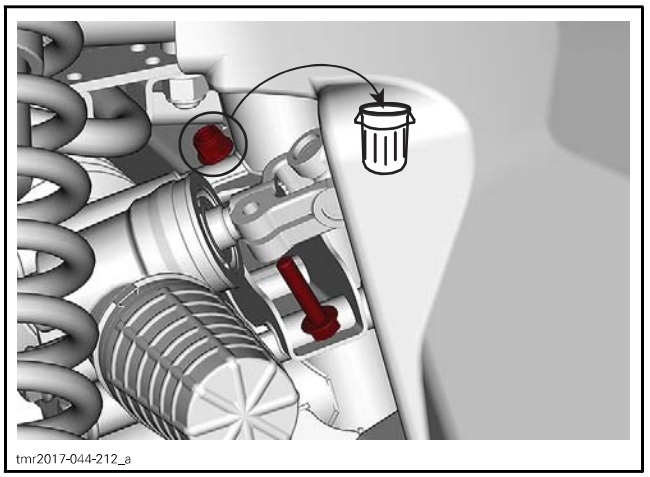
tmr2017-044-212_a

8. Remove the bolts securing rack and pinion to frame.

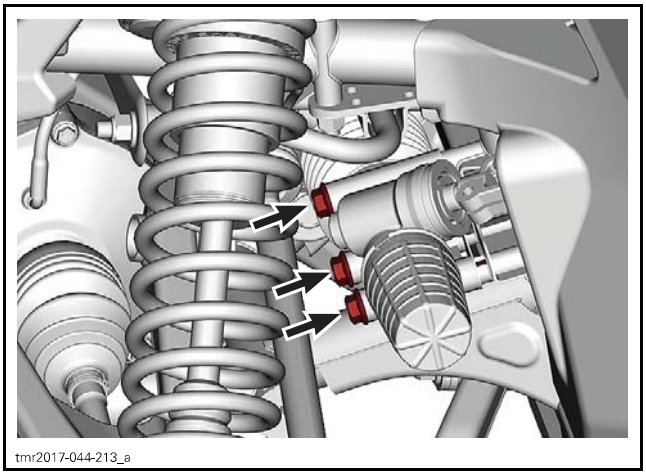

LH SIDE OF VEHICLE

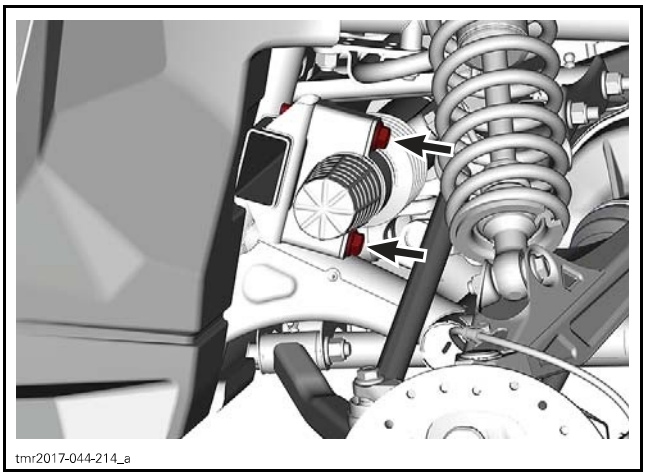

RH SIDE OF VEHICLE

9. Free the rack and pinion form the steering column U-joint.
10. Remove rack and pinion from vehicle.

Installing the Rack and Pinion

The installation is the reverse of the removal procedure. However, pay attention to the following.

Find rack and pinion center as follows:

– Calculate the total pinion shaft rotations from side to side.
– Position the pinion shaft at **half** the total rotations.
– Using a paint marker, make an alignment mark on pinion and on the rack housing.

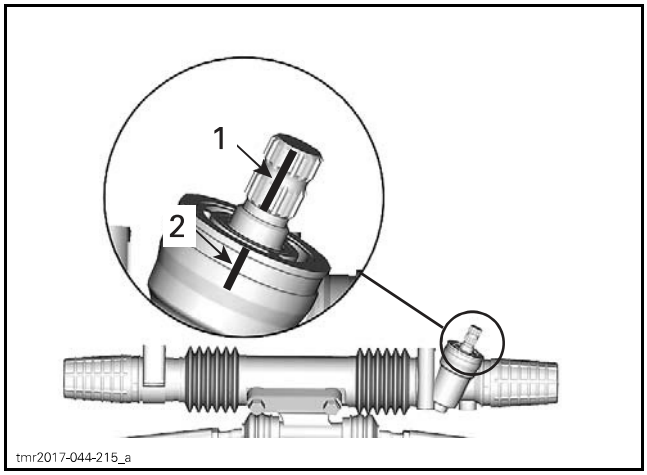

1. Alignment mark on pinion
2. Alignment mark on rack housing

Ensure steering wheel is centered (horizontal).

Apply LOCTITE 767 (ANTISEIZE LUBRICANT) (P/N 293 800 070) on the splines of the lower U-joint of the steering column.

Position rack and pinion in frame and engage the pinion shaft in the steering column U-joint. Make sure steering wheel remains centered.

Loosely install rack and pinion retaining bolts.

Tighten all fasteners as outlined in *STEERING SYSTEM TIGHTENING SEQUENCE*.

NOTICE **The steering system tightening sequence must be strictly followed. Failure to do so may result in a steering component misalignment, poor DPS operation due to an induced erroneous torque on DPS shaft or the impossibility to perform a torque sensor reset.**

Check steering alignment. Refer to *ALIGNING THE WHEELS* in this subsection.

TIE ROD ADJUSTMENT SLEEVE

Inspecting the Adjustment Sleeve

Before removing any components:

1. Raise front wheels off the ground.
2. Turn steering wheel from stop to stop.
3. Ensure steering wheel turns smoothly.

Before replacing the tie rod adjustment sleeve, inspect the following:

– Knuckle must not be damaged
– Tie rod end bolt must not be bent

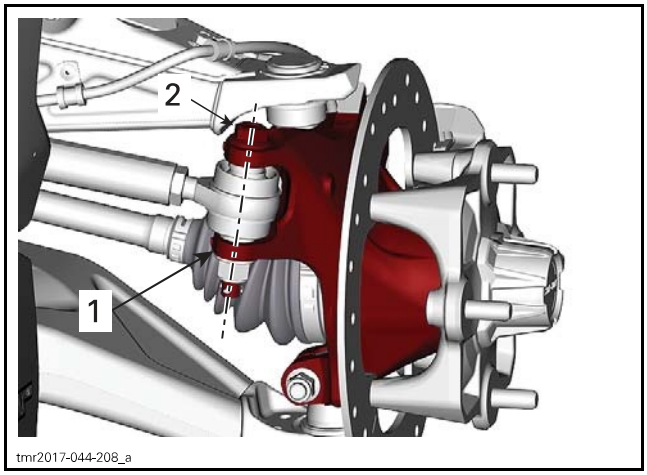

1. Knuckle
2. Tie rod end bolt

– Rack and pinion shaft must not be loose
– Frame welds must be intact
– Rack and pinion support and mounting holes must not be cracked or deformed

Removing the Adjustment Sleeve

1. Loosen both tie rod adjustment sleeve jam nuts.

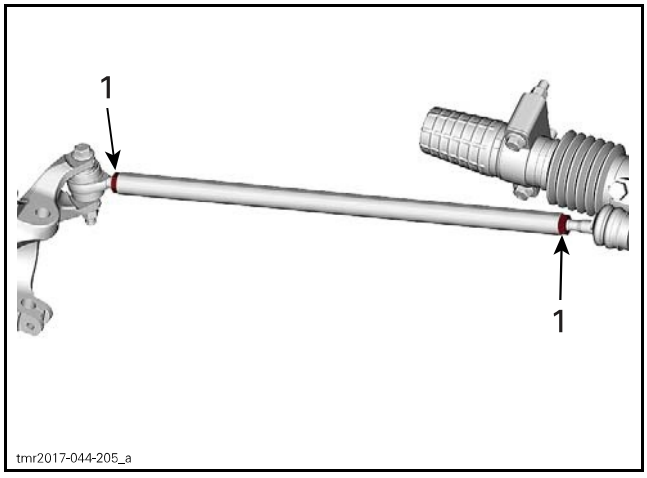

1. Tie rod adjustment sleeve jam nut

2. Remove tie rod end bolt.

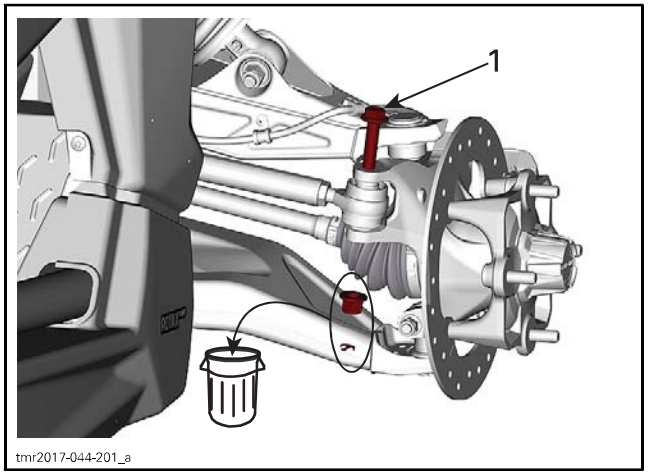

1. Tie rod end bolt

3. Remove tie rod end.

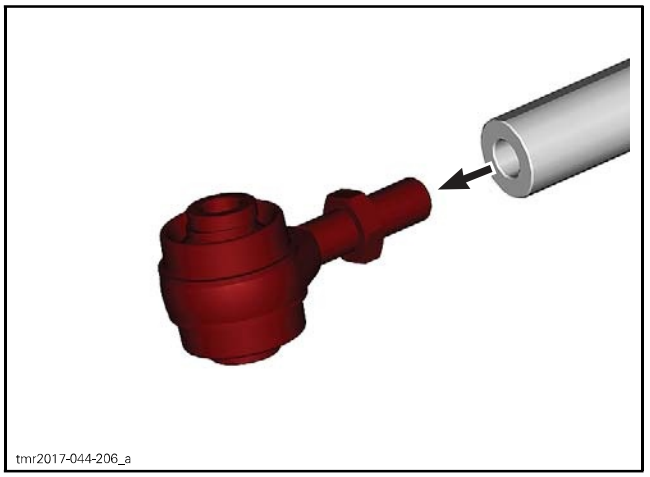

4. Hold inner tie rod and unscrew tie rod adjustment sleeve.

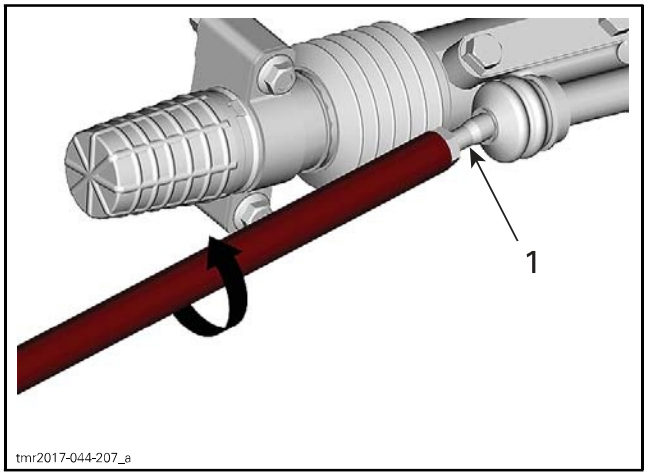

1. Inner tie rod

Installing the Adjustment Sleeve

Reverse removal procedure, pay attention to the following:

1. Adjust inner tie rod and tie rod end to the nominal engagement length.

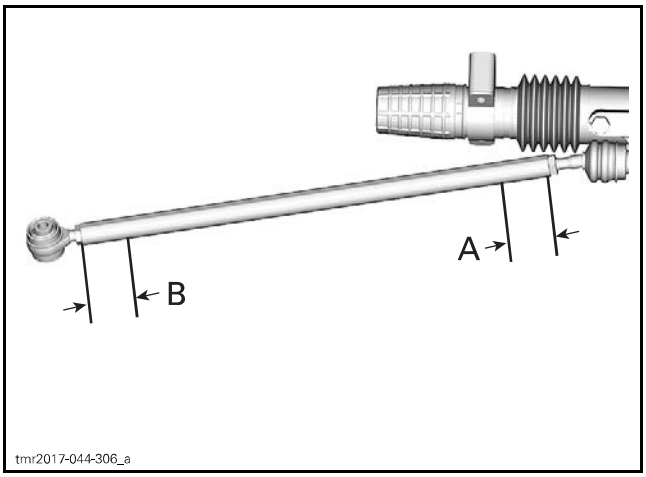

A. Inner tie rod engagement length
B. Tie rod end engagement length

TIE ROD NOMINAL ENGAGEMENT LENGTH	
Inner tie rod	36 mm (1-13/32 in)
Tie rod end	31 mm (1-1/4 in)

2. Lock inner jam nut.
3. Carry out a steering alignment, refer to *ALIGNING THE WHEELS* in this subsection.

TIE-ROD END

Replacing the Tie-Rod End

1. Safely lift and support the front of vehicle. Refer to *INTRODUCTION* subsection.
2. Remove front wheel.
3. Detach tie-rod end by removing:
   – Cotter pin (discard)
   – Tie-rod end retaining nut (discard)
   – Tie-rod end bolt.

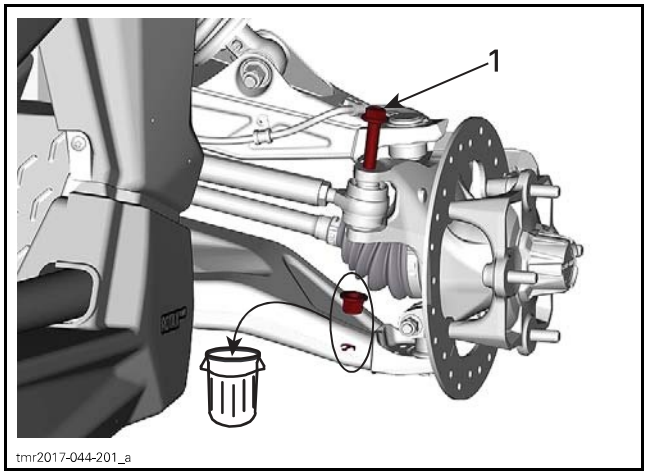

TYPICAL
1. Cotter pin
2. Tie-rod end retaining nut
3. Tie-rod end bolt

4. Unscrew and discard the tie-rod end.
5. Install new tie-rod end.
6. Adjust tie-rod end to the nominal engagement length.

TIE-ROD END NOMINAL ENGAGEMENT LENGTH
31 mm (1.22 in)

⚠ WARNING

The minimum tie-rod end engagement length must be 25 mm (1 in).

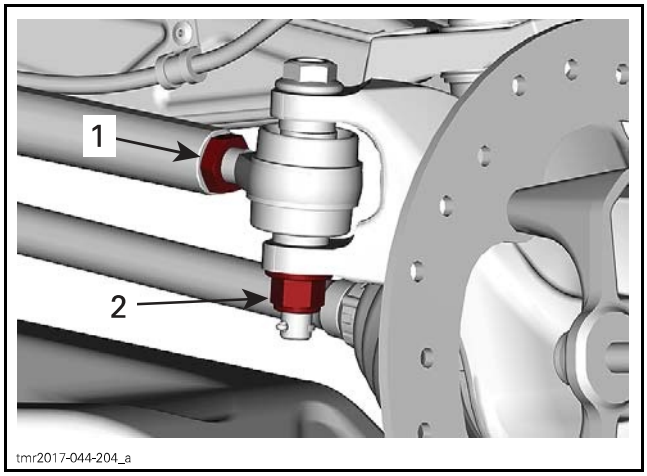

1. Locking nut
2. Retaining nut

7. Tighten **locking** nut(s) to specification.

TIGHTENING TORQUE	
Tie-rod end locking nut	34 N•m ± 2 N•m (25 lbf•ft ± 1 lbf•ft)

8. Attach tie-rod end to steering knuckle.

9. Install a NEW tie-rod end **retaining** nut and tighten to specification.

TIGHTENING TORQUE	
Tie-rod end retaining nut	105 N•m ± 15 N•m (77 lbf•ft ± 11 lbf•ft)

10. Install a NEW cotter pin. Both ends of cotter pins must be folded.
11. Install front wheel.
12. Check steering alignment, refer to *ALIGNING THE WHEELS* in this subsection.

KNUCKLE

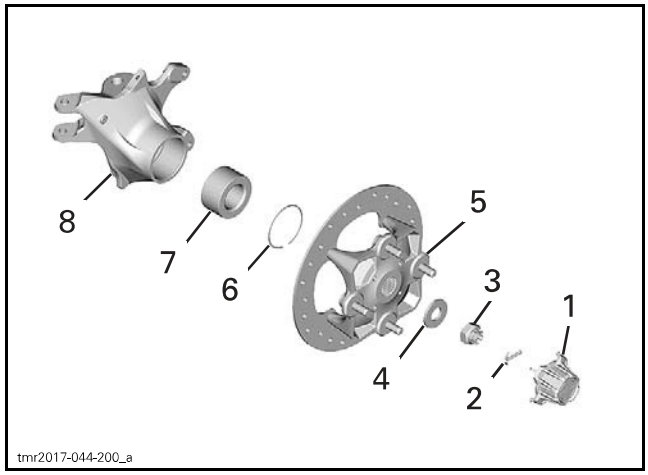

FRONT KNUCKLE ASSEMBLY
1. *Wheel cap*
2. *Cotter pin*
3. *Axle nut*
4. *Conical disc washer*
5. *Wheel hub with disc brake assembly*
6. *Circlip*
7. *Bearing*
8. *Knuckle*

Removing the Knuckle

1. Safely lift and support the front of vehicle. Refer to *INTRODUCTION* subsection.
2. Remove front wheel.
3. Remove wheel hub, refer to *FRONT DRIVE* subsection.
4. Detach tie-rod end from knuckle, refer to *TIE-ROD END* in this subsection.
5. Detach upper and lower suspension arms from knuckle, refer to *FRONT SUSPENSION*.
6. Remove knuckle from vehicle.

Inspecting the Knuckle

Check knuckle for cracks or other damages.

Replace if necessary.

Installing the Knuckle

The installation is the reverse of the removal procedure.

WHEEL BEARINGS

Inspecting the Wheel Bearing (Maintenance)

Refer to *PERIODIC MAINTENANCE PROCEDURES* subsection.

Inspecting the Wheel Bearing (During Component Removal)

Whenever the drive axle or knuckle is removed, check wheel bearing as follows:

– Check if wheel bearing turns freely and smoothly.
– Check seal condition.

Replace if necessary.

Removing the Wheel Bearing

1. Remove knuckle from vehicle, refer to *REMOVING THE KNUCKLE* in this subsection.
2. Remove and discard circlip
3. Install knuckle on a press.
4. Use an appropriate bearing remover.
5. Remove bearing from knuckle.

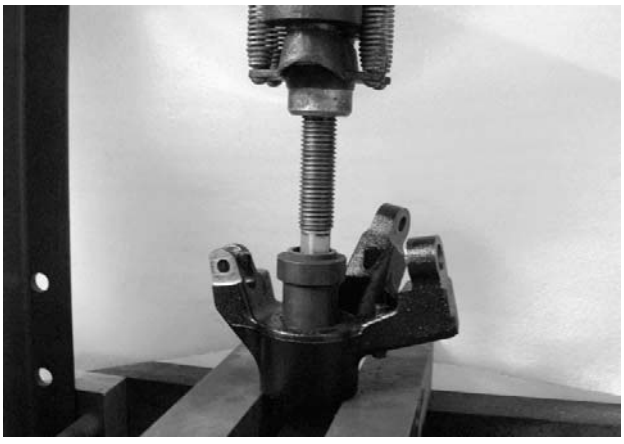

NOTE: It may be necessary to heat the knuckle to remove bearing.

⚠ WARNING

Clean all grease, outside and inside, from knuckle before heating it.

Installing the Wheel Bearing

The installation is the reverse of the removal procedure. However, pay attention to the following.

To ease wheel bearing installation:

– Place bearing in a freezer for 10 minutes.
– Place knuckle in oven to 100°C (212°F) for 30 minutes maximum.

When knuckle is cooled down, install a **NEW** circlip.

DYNAMIC POWER STEERING (DPS)

SERVICE TOOLS

Description	Part Number	Page
FLUKE 115 MULTIMETER	529 035 868	8, 10

SERVICE PRODUCTS

Description	Part Number	Page
LOCTITE 767 (ANTISEIZE LUBRICANT)	293 800 070	12

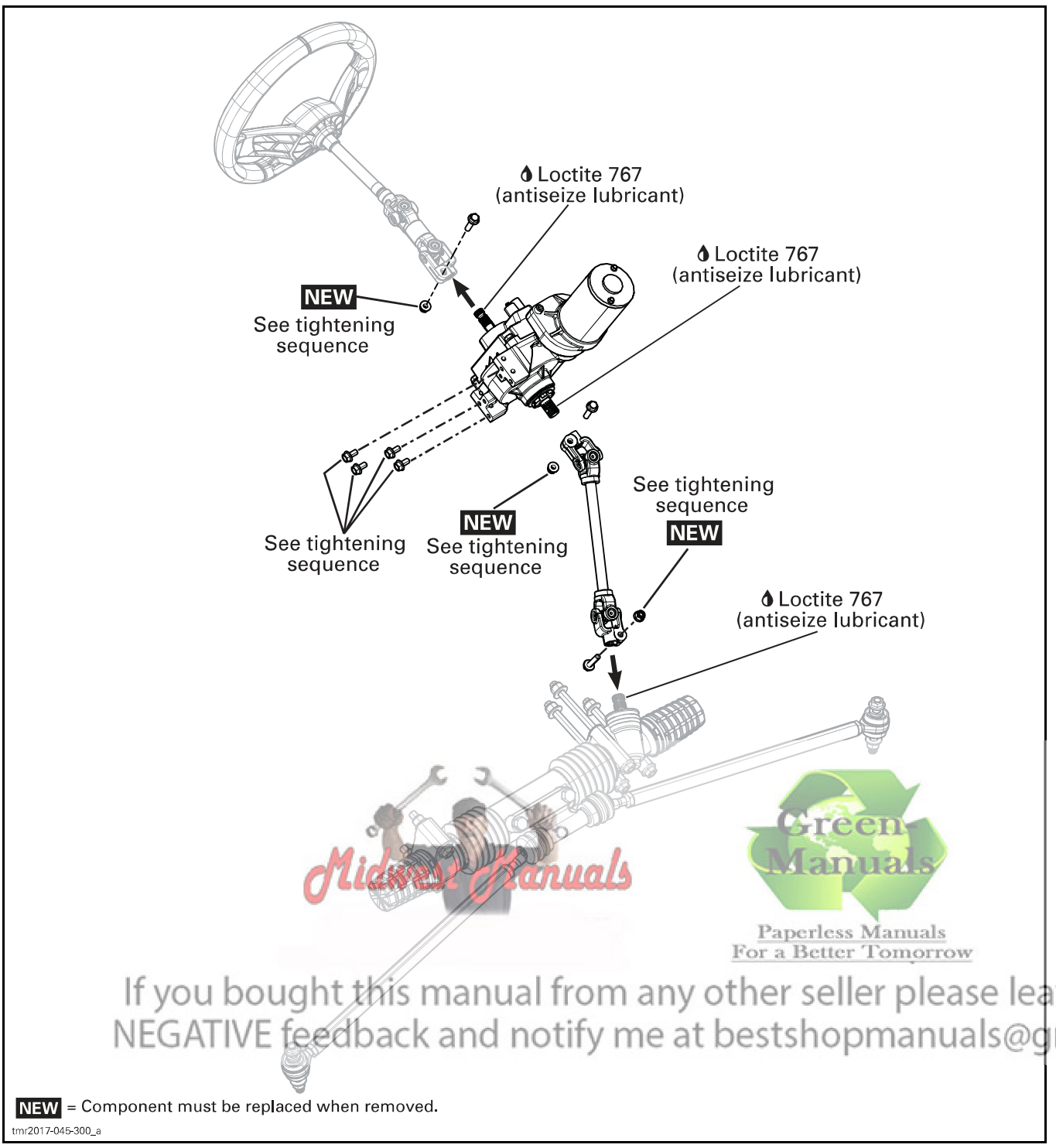

Midwest Manuals
Green Manuals
Paperless Manuals
For a Better Tomorrow
If you bought this manual from any other seller please leave them
NEGATIVE feedback and notify me at bestshopmanuals@gmail.com

NEW = Component must be replaced when removed.

tmr2017-045-300_a

GENERAL

NOTICE Never perform arc welding in the DPS area. Otherwise, poor DPS operation might occur.

DPS SYSTEM DESCRIPTION (FEATURES)

The Dynamic Power Steering (DPS) provides a computer controlled, variable power assist, achieved by an electric motor to optimize the amount of steering input required by the rider.

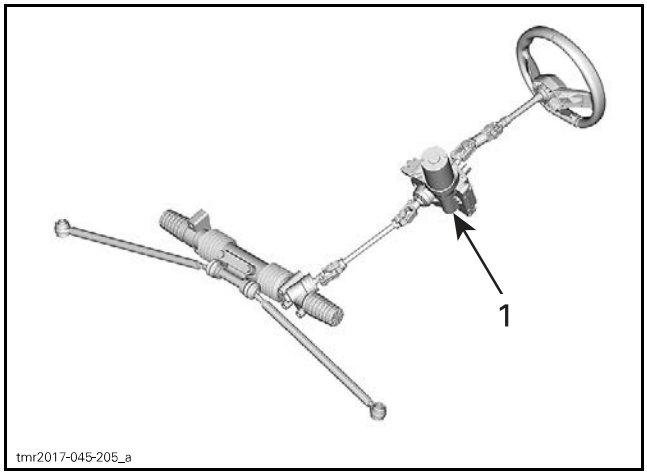

1. Dynamic power steering unit (DPS)

The DPS system uses the following parameters to determine how much steering assist it provides:

- DPS mode
- Engine RPM
- Battery/electrical system voltage
- Vehicle speed
- DPS shaft torque sensor input
- DPS internal temperature.

The amount of steering assist provided is dependent on the steering wheel effort (steering torque), electrical power available, vehicle speed and the DPS assist mode selected.

The greater the steering wheel effort (torque), the greater the assist will be.

The slower the vehicle speed, the greater the assist will be.

If the electrical system is activated but the engine is **not** running, DPS assist will be provided for approximately 30 seconds. DPS assist will resume once the engine is started.

Steering torque may also come from the wheels due to rough terrain. This will produce steering kickback that is reduced by the DPS module, while providing feedback to the driver.

The greater the power steering assist, the greater the load on the electrical system.

When the electrical system is under high load (battery not at full charge, operating the vehicle for prolonged periods at slow speed and low RPM which, requires higher power steering assist), the battery power reserve will gradually decrease. This further increases the load on the charging system and the electrical system voltage will drop. When system voltage has dropped to a low threshold voltage, so does power steering assist.

NOTE: It is important to maintain the battery at a full state of charge to ensure proper DPS operation.

DPS Assist Mode

The DPS system provides three rider selectable modes of operation.

The system automatically adjusts to the speed of the vehicle and driving conditions. the modes are designed to meet the preference of the driver.

The following DPS modes are preset in the vehicle.

DPS MODE	
DPS MAX.	Maximum steering assist
DPS MED.	Medium steering assist
DPS MIN.	Minimum steering assist

DPS SYSTEM DESCRIPTION (COMPONENTS)

DPS Unit

The DPS unit is a self contained unit that includes the steering gear, the DPS module, the DPS motor, and the torque sensor.

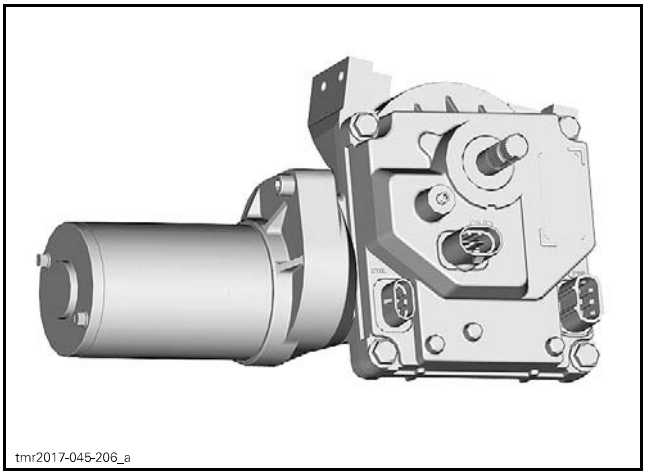

TYPICAL DPS UNIT

The DPS module provides DC power to the motor. The amount and duration of that DC power is determined by the inputs to the DPS module. The direction in which the motor turns is changed by reversing the polarity of the circuit current.

The DPS motor does not "spin", but rather turns in very small increments based on the amount, duration, and direction of DC power delivered by the DPS module.

Should the DPS unit fail, vehicle steering is still available with moderate increase in steering effort.

DPS Unit Protection

An internal protection system is integrated in the DPS electronic module.

This system protects the electronic components when the DPS works too hard and the internal temperature reaches a critical level, or when the battery voltage becomes too low.

The internal protection system decreases the assistance level available to protect its electronic board. The normal assistance level will return when riding conditions are back to normal and the internal temperature decreases, and/or when the battery voltage increases above a threshold voltage.

This reaction is a normal protective behavior of the unit and does not necessarily raise a fault.

Steering Torque Sensor

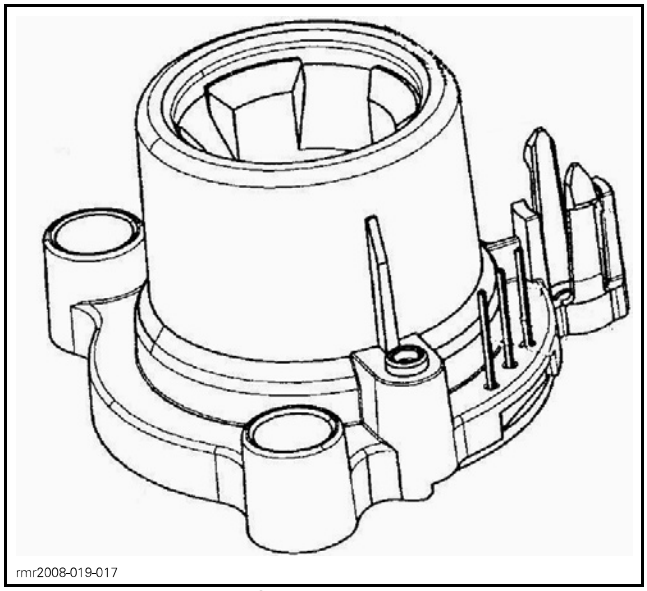

INTEGRATED IN THE DPS

The steering column is connected to the top of the DPS shaft. A small area of the DPS shaft is magnetized. Inside the DPS unit, a torque sensor surrounds the magnetized area of the DPS shaft.

When the steering wheel is turned, torque is applied to the shaft which tends to twist the shaft slightly, deforming the magnetic field in the shaft. The sensor detects the torque by measuring the deviation of the magnetic field.

The torque sensor is very sensitive and can detect very small changes in the magnetic field. The harder the steering wheel is turned, the greater the magnetic deviation, the greater the power steering assist.

NOTICE **The internal torque sensor is very sensitive to external magnetic source. All components touching the DPS unit must be kept in a non-magnetic area and avoid any contact with magnetized components. When DPS shaft (or touching components) is in contact with a magnetized part or source, this will affect the torque reading values and inadvertently affect the behavior of the DPS unit.**

DPS Switch

The DPS switch is used to change the DPS mode.

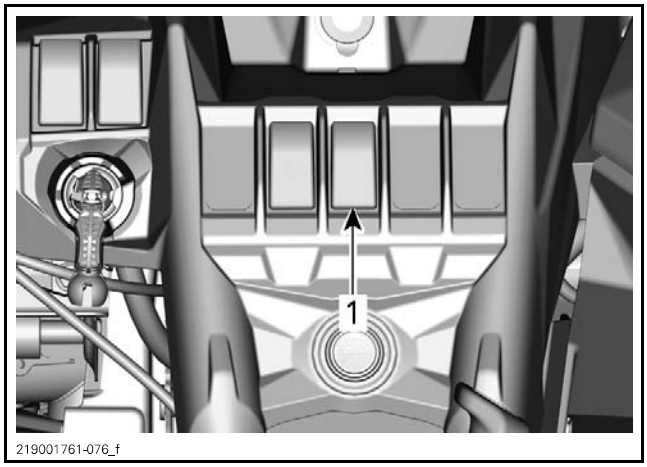

TYPICAL
1. DPS switch

It provides a "voltage ground" to the multifunction gauge that tells the gauge the operator wants to change DPS operating mode.

When the button is held for 2 seconds, the gauge signals the DPS (through CAN bus) to switch to the following DPS mode.

Repeatedly pressing the DPS switch toggles the DPS through its operating modes. The DPS mode selection message will be seen scrolling in the multifunction gauge.

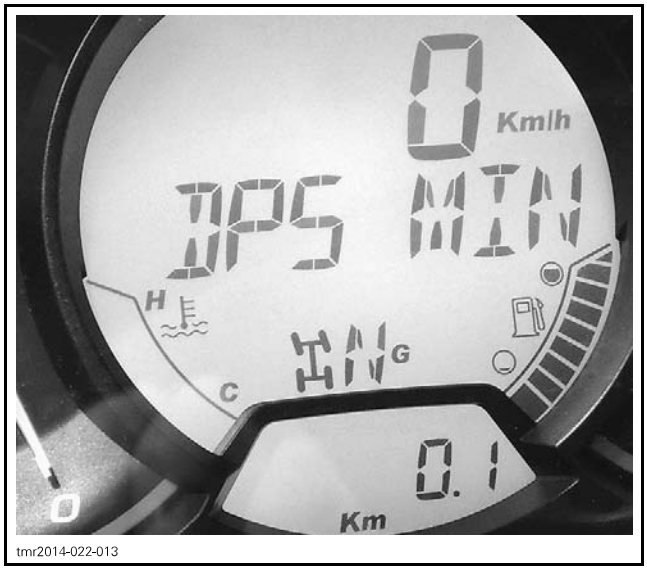

ADJUSTMENT

ALIGNING THE STEERING COMPONENTS

Refer to *STEERING SYSTEM* subsection for the complete procedure.

NOTICE The steering system tightening sequence **must be strictly followed.** Failure to do so may result in a steering component misalignment, poor DPS operation due to an induced erroneous torque on DPS shaft, or the impossibility to perform a torque sensor reset. A magnetized component in contact with DPS shaft might also affect the ability to reset the torque sensor.

TROUBLESHOOTING

CUSTOMER COMPLAINT ABOUT THE STEERING SYSTEM

1. DPS or mechanical failure.
   - *Perform the STEERING SYSTEM SELF TEST procedure in this subsection.*

NO POWER STEERING ASSIST

1. DPS malfunction.
   - *If the CHECK ENGINE light is on and a CHECK DPS message is visible in the multifunction gauge, check for fault codes and carry out service action.*
2. No power to DPS unit.
   - *Carry out a TESTING THE DPS FUSE as detailed in this subsection. Replace as required.*
   - *Carry out a TESTING THE DPS INPUT VOLTAGE as detailed in this subsection. Repair or replace wiring/connectors as required.*
   - *Carry out a TESTING THE DPS IGNITION SIGNAL VOLTAGE as detailed in this subsection. Repair or replace wiring/connectors as required.*
3. No ground to DPS unit.
   - *Carry out a TESTING THE DPS GROUND CIRCUIT as detailed in this subsection. Repair or replace wiring/connectors as required.*
4. No engine RPM signal from ECM.
   - *If engine RPM can be displayed in the multifunction gauge when the engine is running, carry out a TESTING THE DPS UNIT COMMUNICATION LINK (CAN) CONTINUITY as detailed in this subsection. Repair or replace wiring/connector as required.*
   - *If engine RPM cannot be displayed in the multifunction gauge, check for fault codes. Carry out service actions.*

5. No DPS mode signal from multifunction gauge.
   - *Ensure DPS switch circuit is functioning correctly (continuity to ground).*
   - *Check for multifunction gauge (CLUSTER) or communication fault codes.*
   - *Check if a software update is required for the multifunction gauge.*
   - *Ensure continuity of CAN bus from multifunction gauge to DPS unit as detailed in this subsection. Repair or replace wiring/connector as required.*
   - *Replace multifunction gauge.*

LOW POWER STEERING ASSIST

1. DPS mode selection.
   - *If DPS is selected to DPS MIN mode, switch to a higher assist mode and ensure DPS assist has increased.*
2. Low battery voltage.
   - *Check battery terminals. Clean, repair, replace or tighten as required.*
   - *Test battery. Recharge or replace battery as required.*
   - *Carry out a TESTING THE DPS SYSTEM LOAD as detailed in this subsection.*
3. Low input voltage to DPS unit.
   - *Carry out a TESTING THE DPS INPUT VOLTAGE as detailed in this subsection. Ensure power connector pin (DPS2-A) is clean, corrosion free, tight, and make good contact. Repair or replace wiring/connectors as required.*
4. Faulty DPS ground circuit.
   - *Carry out a TESTING THE DPS GROUND CIRCUIT. Ensure DPS ground connector pin (DPS2-B) and frame ground post are clean, corrosion free, tight, and make good contact. Repair or replace wiring/connector as required.*

ASYMMETRICAL POWER STEERING ASSIST (SIDE TO SIDE)

1. Unequal tire pressure.
   - *Adjust tire pressure as per tire decal or TECHNICAL SPECIFICATIONS - VEHICLE.*
2. Vehicle alignment.
   - *Ensure all steering components are undamaged and in good working order. Repair or replace as required.*
   - *Carry out a steering alignment , refer to ALIGNING THE WHEELS in the STEERING SYSTEM subsection.*
3. Steering system components misaligned.
   - *Carry out the ALIGNING THE STEERING COMPONENTS procedure as detailed in the STEERING SYSTEM subsection.*
4. DPS malfunction.
   - *Carry out a TESTING THE DPS CURRENT as detailed in this subsection.*
5. Torque sensor not reset to zero.
   - *When all other possibilities have been eliminated, carry out the RESETTING THE TORQUE OFFSET procedure detailed in this subsection.*

DPS ASSIST MODE CANNOT BE CHANGED

1. Communication problem, faulty gauge, faulty DPS, faulty wiring or connections.
   - *Check for multifunction gauge (CLUSTER) or communication fault codes.*
   - *Check wiring and connectors. Repair or replace as required.*
2. No DPS switch signal to multifunction gauge.
   - *Disconnect multifunction gauge and check continuity of DPS switch circuit to ground.*
3. No DPS mode signal from multifunction gauge to DPS unit.
   - *Check continuity of CAN bus from multifunction gauge to DPS unit.*
   - *If the CAN bus circuit and mode switch circuit test good, replace gauge.*
4. DPS unit not responding to mode change signal from multifunction gauge.
   - *Ensure DPS unit is properly connected and that connector contacts are clean and in good condition.*
   - *Ensure DPS unit has a good ground.*
   - *Ensure DPS unit receives proper input voltages.*

TORQUE SENSOR CANNOT BE RESET

1. Mechanical problem or DPS parts.
   - *Refer to RESETTING THE TORQUE OFFSET in this subsection.*
2. Torque offset too great.
   - *Refer to RESETTING THE TORQUE OFFSET in this subsection.*

PROCEDURES

STEERING SYSTEM SELF TEST

This test verifies the DPS torque reading on the entire steering angle range. It will not test any internal function or any performance of the DPS itself and it will not verify the accuracy of the vehicle wheel alignment.

It is made to detect:
– Steering component misalignment
– Magnetized component in contact with DPS main shaft.

If the test fails, the BRP diagnostic software will provide a description of the failure and suggest a corrective action.

To initiate the test:

1. Connect vehicle to the applicable BRP diagnostic software version. Refer to *COMMUNICATION TOOLS* subsection.
2. Select:
   – **Functions** page.
   – **DPS** button.
   – **Routines** tab.
3. Follow the instructions on the screen.
4. Click on **Validate Steering Assembly**.

The test will run by itself, then the result will be displayed.

NOTICE **Ensure to perform corrective action as per the procedures outlined in this subsection.**

STEERING SYSTEM TIGHTENING SEQUENCE

Refer to *STEERING SYSTEM* subsection for the complete sequence.

RESETTING THE TORQUE OFFSET

Before resetting the torque offset:
– Carry out *ALIGNING THE STEERING COMPONENTS*, see procedure in this subsection.
– The vehicle must be properly aligned and the steering centered.

The torque offset resetting procedure can only then be carried out as a last resort if one of the following conditions exist:
– Left and right steering imbalance (steering effort)
– Unequal self centering
– The torque offset is within ±10Nm.

1. Position the steering wheel at the center position.
2. Connect vehicle to the applicable BRP diagnostic software version. Refer to *COMMUNICATION TOOLS* subsection.
3. Check if a software update is available and warranted for the DPS. Select:
   – **Flash** page.
   – **DPS** or **Vehicle** button.
   – **Flash** tab.

If an update is available, install it before resetting the torque offset.

REQUIRED CONDITIONS TO ALLOW THE RESET PROCEDURE
DPS unit temperature above freezing point.
Steering wheel should be free and centered. There MUST NOT be any effort applied to the steering column.
Torque sensor value must be within offset threshold value of ± 10Nm.
Engine not running.

4. To reset the torque offset, select:
   – **Settings** page.
   – **DPS** or **Vehicle** button.
   – **Initialization** tab.
5. Select **Torque Sensor Offset**.

NOTE: Torque reading must be stable and not exceeding 2Nm during procedure. Torque sensor reset may not be possible if the torque value is over the 10Nm above the original setting.

With the steering wheel centered and no effort is applied, if the indicated **Torque Sensor** value is over the threshold value of 1.5Nm, a steering imbalance may be noticeable.

If all steering components are undamaged, in good working order, and the steering components were correctly aligned, repeated torque offset reset procedures will not solve the problem if the torque offset is greater than ±10Nm. DPS unit replacement may be required.

DPS UNIT

NOTICE **Never perform arc welding in the DPS area. Otherwise, poor DPS operation might occur.**

Testing the DPS Fuse

A 40 A DPS fuse located near the battery provides power for the DPS motor.

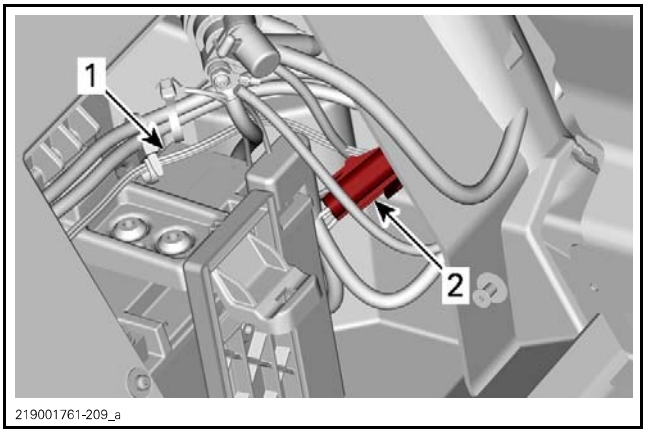

DPS FUSE LOCATION
1. Battery
2. DPS fuse

1. Remove the DPS fuse cap to expose the fuse contacts.
2. Using a FLUKE 115 MULTIMETER (P/N 529 035 868) set to VDC, test for a voltage drop across the DPS fuse while the DPS is in operation.



3. If a voltage is measured, turn power off and remove fuse.
4. Check fuse continuity, fuse contacts and fuse box contact condition. Replace fuse as required.

Testing the DPS Input Voltage

1. Disconnect the DPS PWR (power) connector.

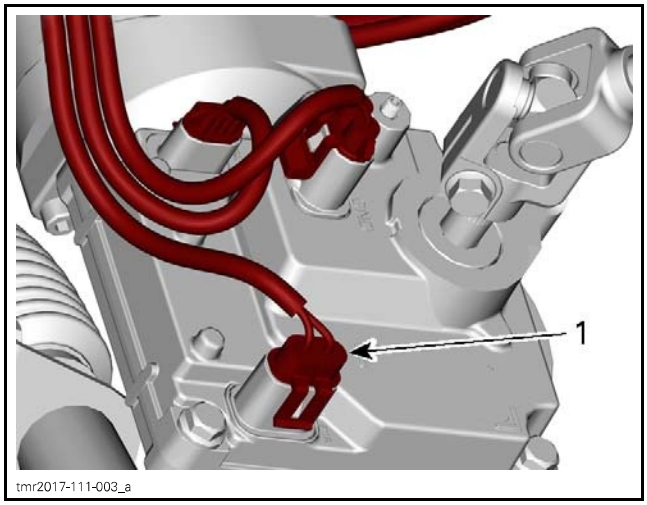

1. DPS PWR connector

2. Test for 12 Vdc DPS motor power at DPS2 harness connector as per following table.

MULTIMETER PROBE POSITIONS		VOLTAGE
DPS power connector pin A and B	Battery ground	Battery voltage
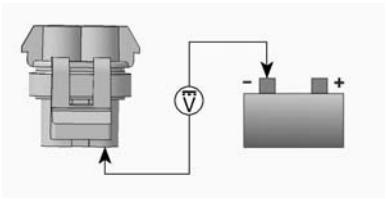		

If NO voltage is measured, test the DPS fu se. If good, check wires and connector pins. Replace or repair defective parts and reset fault codes.

If battery voltage is measured, carry out the following *TESTING THE DPS IGNITION SIGNAL VOLTAGE*.

NOTE: This test may also be carried out by connecting a 12 Vdc test light between the DPS PWR harness connector (pin A), and the battery (-) negative terminal. The test light must come on bright.

Testing the DPS Ignition Signal Voltage

1. Disconnect DPS CONTROL connector.

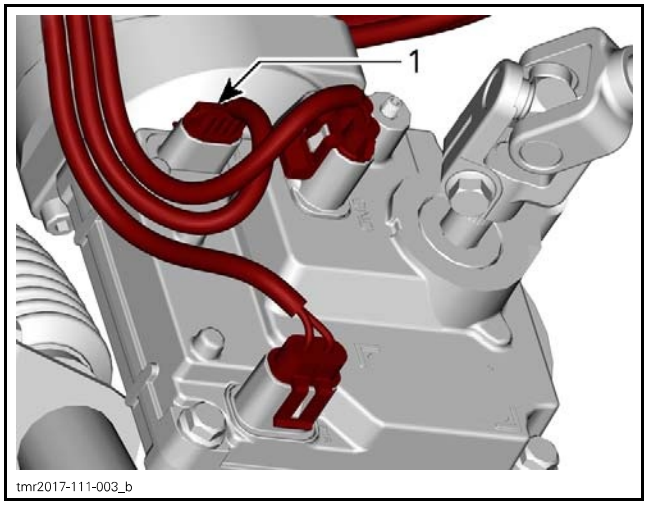

1. Control connector

2. Set the ignition switch to ON.
3. Test for 12 Vdc power to the DPS module at DPS1 harness connector as per following table.

MULTIMETER PROBE POSITIONS		VOLTAGE
DPS control connector pin A	Battery ground	Battery voltage
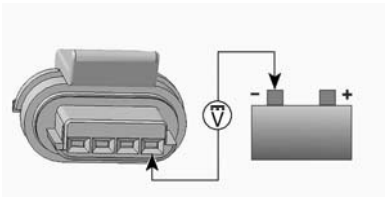		

If NO voltage is measured, test fuse F4 in fuse box **no. 1** (PF1).

If fuse F4 is good, check wires and connector pin from DPS unit to main relay 2 in fuse box **no. 1** (PF1). Replace or repair defective parts and reset fault codes.

If battery voltage is measured, carry out the following *TESTING THE DPS GROUND CIRCUIT*.

NOTE: This test may also be carried out by connecting a 12 Vdc test light between the DPS control harness connector (pin A), and the battery (-) negative terminal. The test light must come on bright.

Testing the DPS Ground Circuit

1. Disconnect the DPS GROUND connector (DPS3).

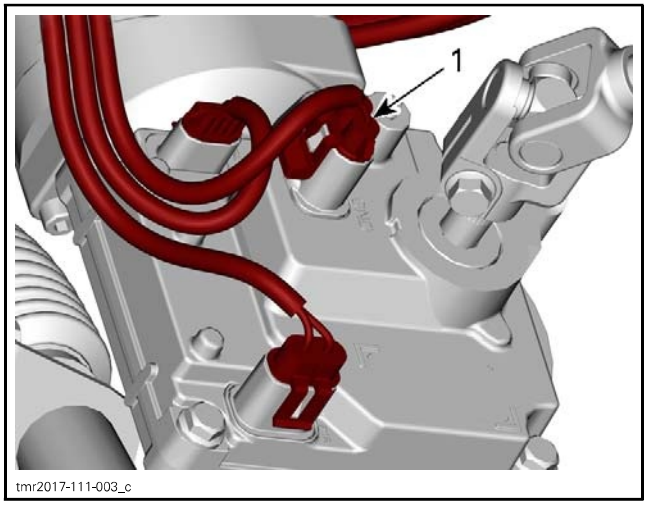

1. DPS ground connector

2. Test for continuity between DPS3- to battery ground.

MULTIMETER PROBE POSITIONS		READING
DPS POWER connector pin A and B	Battery ground	Continuity (close to 0 Ω)

If there is NO continuity or a high resistance is measured, check wires and connector pins from DPS unit to chassis ground post. Replace or repair defective parts and reset fault codes.

If there is good continuity, carry out the following *TESTING THE DPS UNIT COMMUNICATION LINK (CAN) CONTINUITY*.

NOTE: This test may also be carried out by connecting a 12 Vdc test light between the GROUND connector pin A and B and the battery (+) positive terminal. The test light must come on bright.

Testing the DPS Unit Communication Link (CAN) Continuity

DPS unit must receive a "MODE" signal from the multifunction gauge and an RPM signal to provide power steering assist. If the DPS mode changes when the DPS mode switch is activated for 2 seconds, then the system is functioning correctly. If the DPS does not respond, check for applicable faults using the diagnostic software before carrying out this test.

Disconnect the DPS CONTROL connector and the diagnostic connector.

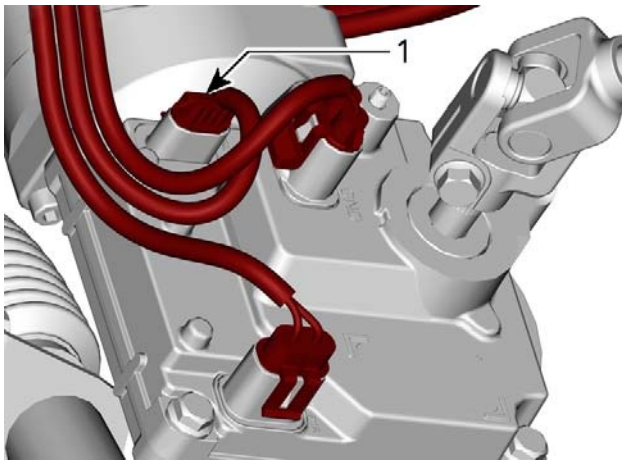

1. Control connector

Test continuity of CAN Bus Wires as per following table.

MULTIMETER PROBE POSITIONS		RESISTANCE @ 20°C (68°F)
DPS SENSOR CONNECTOR (DPS1)	DIAGNOSTIC CONNECTOR	
Pin C	Pin 1	Less than 1 Ω
Pin D	Pin 2	

If resistance measured is out of specification, check wires and connector pins. Carry out repairs as required and reset fault codes.

If resistance measured is good, replace the DPS unit and reset fault codes.

Testing the DPS System Load

REQUIRED TOOL	
FLUKE 115 MULTIMETER (P/N 529 035 868)	

If the charging system cannot sustain normal voltage when the DPS is operating, DPS ASSIST may be reduced or nonexistent. Carry out the following steps.

1. Measure the battery voltage. Recharge if voltage is low.
2. Ensure the vehicle transmission is set to PARK.
3. Start the engine.
4. Note the voltage on the multimeter with the engine running (charging system voltage).
5. Press the RANGE button repeatedly to select Manual Range 6 0.

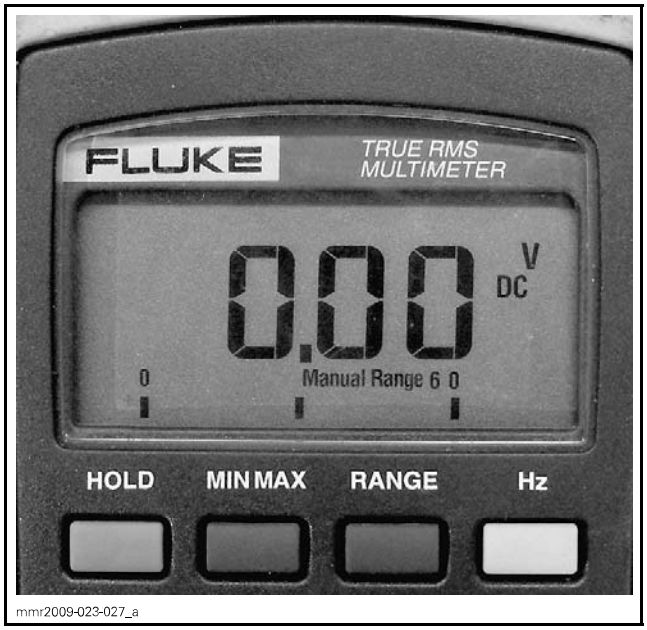

VDC SELECTED TO MANUAL RANGE 6 0

6. Press the MIN MAX button on the multimeter to engage the MIN function.

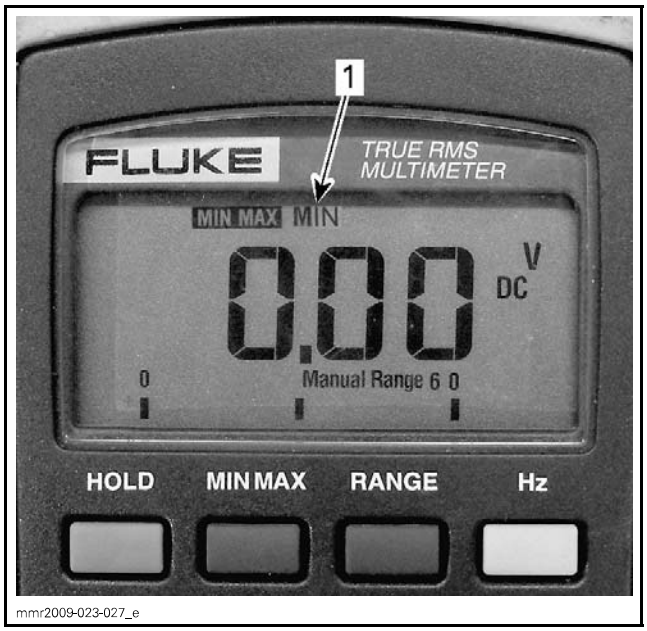

1. MIN function selected

7. Turn the steering wheel **momentarily** against the steering hard stops to each side.

NOTE: Do not hold steering against steering hard stops for and extended period of time.

8. Read the MIN charging system voltage recorded while the steering wheel was turned against each stop.

DPS SYSTEM LOAD TEST			
PROBE POSITIONS		STEERING POSITION	VOLTAGE READING
Battery (-) terminal	Battery (+) terminal	LH stop	At least 12 Vdc
		RH stop	

NOTE: Turning the steering wheel momentarily against the steering hard stops generates maximum DPS load (maximum current draw on electrical system). Electrical system must sustain at least 12 Vdc for proper DPS operation.

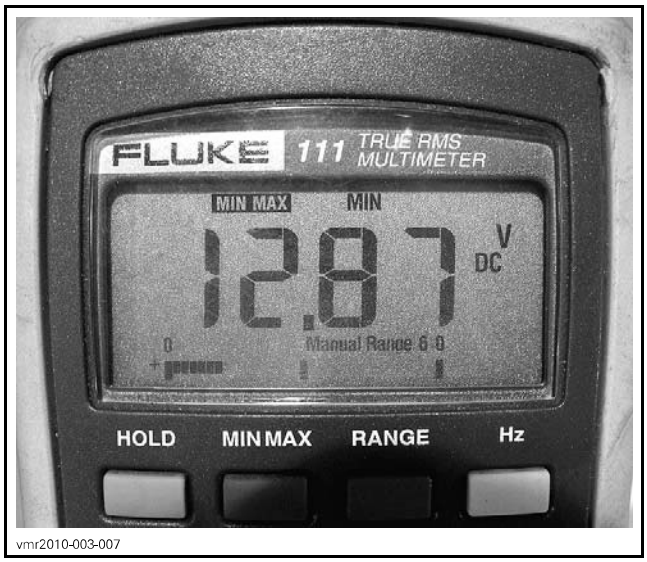

vmr2010-003-007

If the electrical system cannot sustain at least 12 Vdc, check the following:

– Battery
– Battery connections
– DPS unit power and ground connections
– Charging system
– Frame and engine ground studs.

If the previously listed items test good, carry out the following *TESTING THE DPS UNIT CURRENT*.

Testing the DPS Unit Current

1. Connect vehicle to the applicable BRP diagnostic software version. Refer to *COMMUNICATION TOOLS* subsection.
2. Select:
   – **Measurements** page.
   – **DPS** button.
   – **Custom** tab.
3. With the vehicle engine running in PARK and without any steering effort, the reading should be as per following table.

TORQUE SENSOR	DPS CURRENT
0 N•m ± 1 N•m (0 lbf•**in** ± 9 lbf•**in**)	0 Amp

4. Turn the steering wheel side to side, momentarily against each steering hard stop and observe the DPS **Torque Sensor** value. The torque value should increase with steering effort applied to the steering wheel.

The **DPS Current** value should increase proportionately to the torque applied, and decrease with the torque as steering assist is provided.

NOTE: The increase and decrease in torque and current readings is very brief as steering assist is quickly provided. Current draw should remain within green scale but may momentarily peak to or exceed 60 amps, then drop off close to 0 amps as torque applied is nulled out by steering assist. If steering is held against hard stops the torque and current readings will remain high.

If current draw tends to remain high, carry out the following:

– *ALIGNING THE STEERING COMPONENTS*
– *RESETTING THE TORQUE OFFSET* (only if steering components alignment did not solve the problem)
– DPS unit replacement.

NOTE: The *ALIGNING THE STEERING COMPONENTS* procedure must always be carried out before even considering a torque offset reset.

5. Turn steering to LH stop and hold at least 8 Nm. Note DPS current value.
6. Turn steering to RH stop and hold at least 8 Nm. Note DPS current value.
7. Repeat previous two steps while holding at (+ or -) 5 Nm. Note DPS current value.

LH and RH DPS current readings should be the same for the same applied torque.

If the *ALIGNING THE STEERING COMPONENTS* and *RESETTING THE TORQUE OFFSET* procedures have been carried out, and the current or steering imbalance is too great, the DPS unit will require replacement to resolve the problem.

Removing the DPS Unit

NOTICE Before proceeding with the DPS removal, remove the DPS fuse, see *TESTING THE DPS FUSE* for location. Handle the DPS unit with extreme care as it is very sensitive to physical shock. Store unit in a secure area. If the DPS unit is dropped, it must be replaced even if only minimal damage is apparent.

1. Disconnect the electrical connectors from the DPS unit.

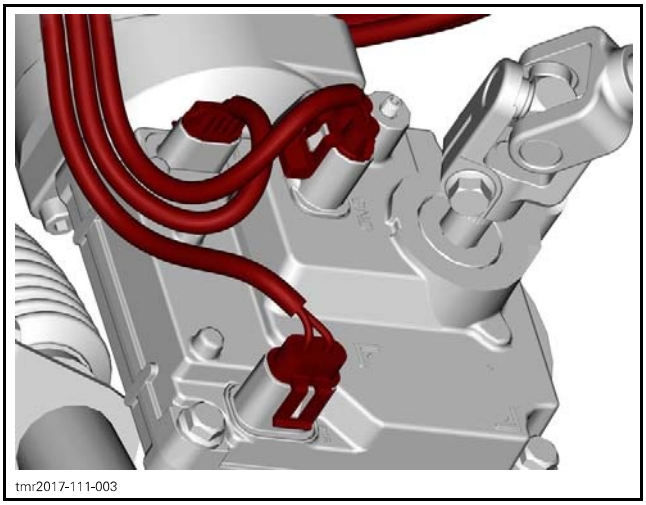
tmr2017-111-003

2. Remove the steering shaft. Refer to *STEERING SYSTEM* subsection.

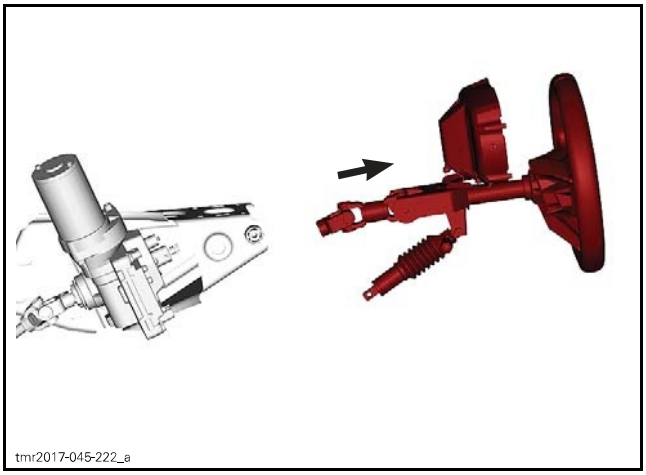
tmr2017-045-222_a

3. Remove pinch bolt securing the upper U-joint of the steering column.

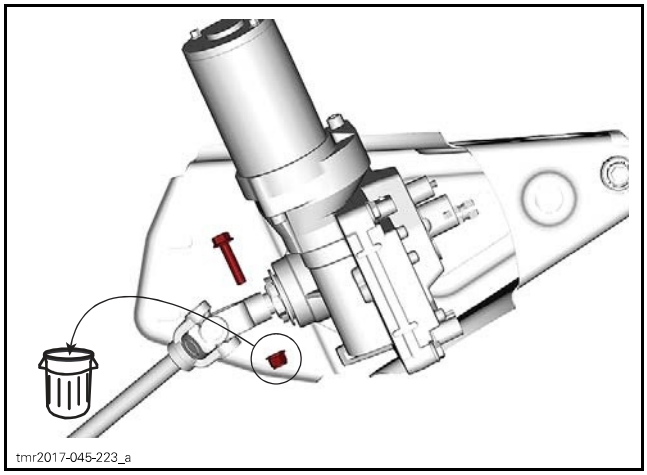
tmr2017-045-223_a

4. From the RH side of the steering column, remove screws securing the DPS to its support.


tmr2017-045-224_a

5. Remove the DPS from the vehicle.

Inspecting the DPS Unit

Inspect DPS shaft seals. If damaged, replace DPS unit.

Inspect DPS shaft splines. If damaged, replace DPS unit.

Inspect and clean terminal contacts.

Installing the DPS Unit

NOTICE The following installation sequence MUST be strictly followed (see procedure details in upcoming paragraphs). Failure to do so may result in DPS misalignment and poor DPS operation due to an induced erroneous torque on DPS shaft or the impossibility to perform a torque sensor reset.

Align front wheels parallel to rear wheels.

Apply LOCTITE 767 (ANTISEIZE LUBRICANT) (P/N 293 800 070) on splines of the steering column upper U-joint.

Engage steering column on the DPS input shaft. Ensure block tooth in steering column U-joint is aligned with machined tooth on DPS input shaft.

Loosely reinstall the M8 pinch bolt with a new M8 nut to secure the U-joint.

Loosely install DPS unit on its support (DO NOT tighten screws yet)

Install steering shaft. Refer to *STEERING COLUMN* subsection. DO NOT torque pinch bolt yet.

Tighten all fasteners as outlined in *STEERING SYSTEM TIGHTENING SEQUENCE* in the *STEERING COLUMN* subsection.

New DPS Unit

New DPS units **do not** come with the required software programmed into the unit. A DPS unit fault will be generated when the vehicle is powered up. The check engine light will come on and a CHECK DPS message will appear in the multifunction gauge.

The new DPS unit will require 2 mandatory updates. The first update is required for the DPS to recognize what type of vehicle it is installed in, the second to upload the software required for proper operation on that vehicle.

When DPS unit installation is complete, carry out the following steps.

1. Connect the vehicle to the applicable BRP diagnostic software version. Refer to *COMMUNICATION TOOLS* subsection.
2. Select the **Flash** page.
3. A message window will appear asking you if you would like to update the DPS module; select **YES** and follow the instructions. When a second window appears asking you the same question, select **YES** again.
4. Once the correct DPS software file is installed, go to the **Faults** page and clear the fault codes.
5. Carry out: *RESETTING THE TORQUE OFFSET* (if required) as described in this subsection.
6. Test drive the vehicle to ensure proper DPS operation.

DPS System Final Verification

With the front wheels off the ground:

1. Enable DPS unit (turn ignition switch ON or start engine).

NOTE: Steering assist will be provided for 30 seconds with the ignition switch ON and engine not running.

2. Slowly turn steering wheel from one side to the other 3 times.

Make sure:

– Assistance and travel are equal when turning right or left
– Steering system operates smoothly through all its range.

3. Lower vehicle on the ground.
4. Repeat step 2.

RESULT	ACTION
Uneven/incorrect steering behavior	Troubleshoot steering problem

NOTE: A verification carried out with the engine not running and a weak battery may result in unsatisfactory DPS performance. In doubt, retest with the engine running.

5. Perform the *STEERING SYSTEM SELF TEST* procedure in this subsection.
6. Carry out a test ride of the vehicle to ensure proper operation of the DPS unit.

SUSPENSION ADJUSTMENTS

SERVICE PRODUCTS

Description	Part Number	Page
PULLEY FLANGE CLEANER	413 711 809	3

GENERAL

The procedure described below is the same for the RH and LH sides, unless otherwise instructed.

ADJUSTMENT

Choice of suspension adjustments vary with vehicle load, personal preference, riding speed and terrain condition.

The best way to set up the suspension, is to start from factory settings, then customize each adjustment one at a time.

Front and rear adjustments are interrelated. It may be necessary to readjust the rear shock absorbers after adjusting front shock absorbers for instance.

Test run the vehicle under the same conditions; trail, speed, load, etc. Change one adjustment and retest. Proceed methodically until you are satisfied.

Following are guidelines to fine-tune suspension.

SUSPENSION ADJUSTMENTS

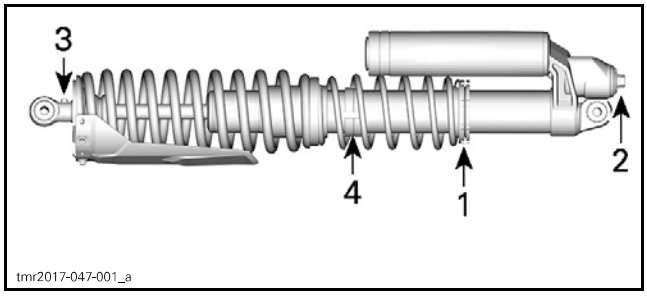

1. *Preload adjustment*
2. *Low speed and high speed compression damping adjuster*
3. *Rebound adjuster*
4. *Crossover rings adjustment*

Adjusting Spring Preload

NOTE: Spring preload affects ground clearance.

Shorten the spring for a firmer ride and rough riding condition or when pulling a trailer (if equipped with hitch).

Lengthen the spring for a softer ride and smooth riding condition.

⚠ WARNING

The left and right shock adjustment on front or rear suspension must always be set to the same position. Never adjust one shock only. Uneven adjustment can cause poor handling and loss of stability, which could lead to an accident.

Lift the vehicle. Spring length should be measured without load on the wheels.

Spring length should be equal on both sides.

Adjust by loosening lock ring and turning adjuster ring as desired.

NOTE: Do not increase the front/rear spring preload by more than 15 mm (.59 in) over the factory setting.

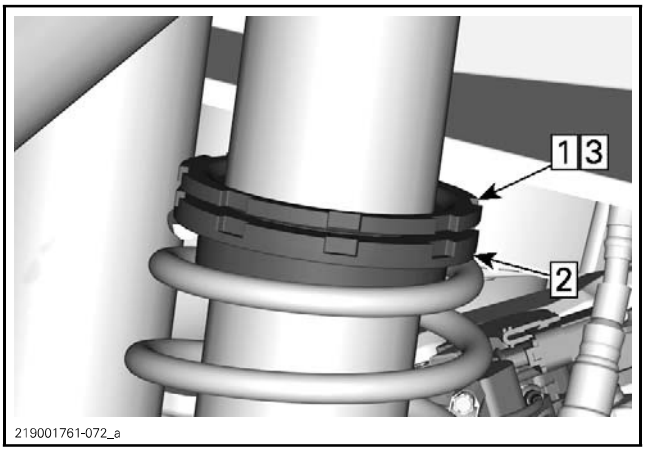

TYPICAL
Step 1: Loosen top locking ring
Step 2: Turn adjusting ring accordingly
Step 3: Tighten top locking ring

Adjusting Shock Damping

Perform adjustments **one** position (click) at a time. Test run the vehicle under the same conditions. Proceed methodically until you are satisfied.

To adjust compression and rebound to factory settings, proceed as follows:

1. Turn adjuster clockwise until it stops.
2. Turn adjuster counterclockwise by the specified amount, see appropriate *SUSPENSION FACTORY SETTINGS* table.

Low Speed Compression Damping

Low speed compression damping controls how the shock absorber reacts to a low suspension velocity (slow compression strokes, in most cases when riding at lower speeds).

ACTION	RESULT ON BIG BUMPS
Increasing low speed compression damping force	Firmer compression damping (slow compression)
Decreasing low speed compression damping force	Softer compression damping (slow compression)

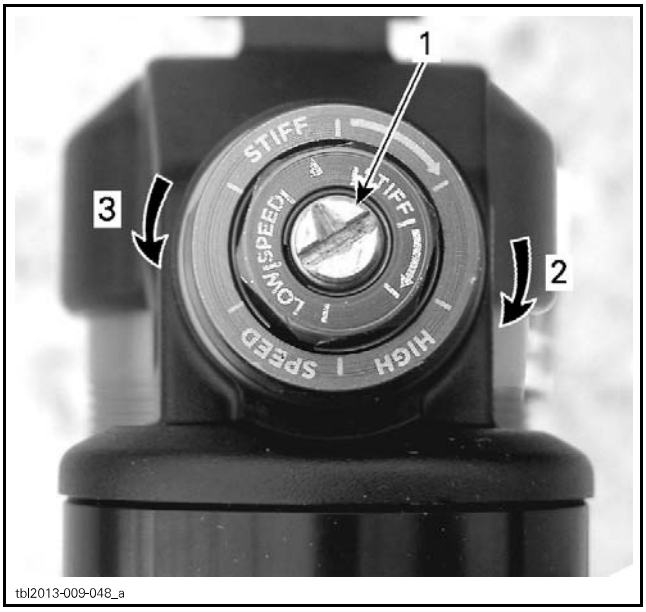

TYPICAL - LOW SPEED COMPRESSION DAMPING
1. *Adjustment screw*
2. **Increases** *damping (stiffer)*
3. **Decreases** *damping (softer)*

High Speed Compression Damping

High speed compression damping controls how the shock absorber reacts to a high suspension velocity (quick compression strokes, in most cases when riding at higher speeds).

ACTION	RESULT ON SMALL BUMPS
Increasing high speed compression damping force	Firmer compression damping (fast compression)
Decreasing high speed compression damping force	Softer compression damping (fast compression)

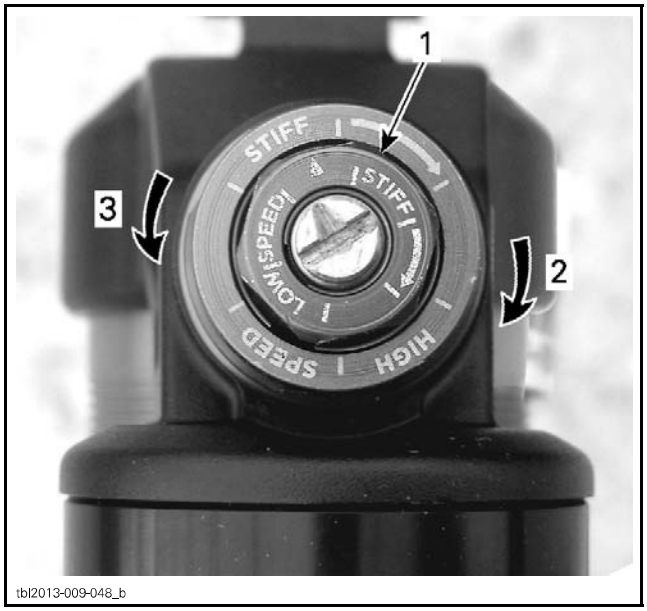

TYPICAL - HIGH SPEED COMPRESSION DAMPING (USE A 17 MM WRENCH)
1. *Adjustment screw*
2. **Increases** *damping (stiffer)*
3. **Decreases** *damping (softer)*

Rebound Damping

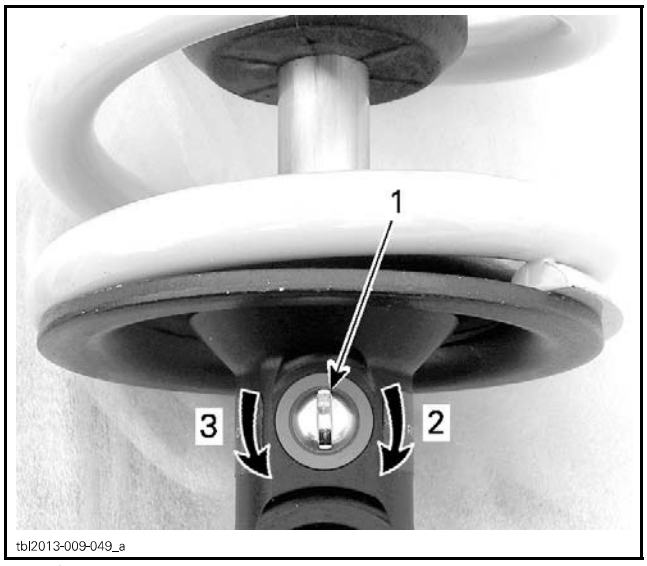

TYPICAL
1. *Rebound adjuster*
2. **Increases** *rebound (stiffer)*
3. **Decreases** *rebound (softer)*

Adjusting Spring Crossover

Dual compression rate crossover point can be modified on the rear shocks by adjusting the crossover ring position.

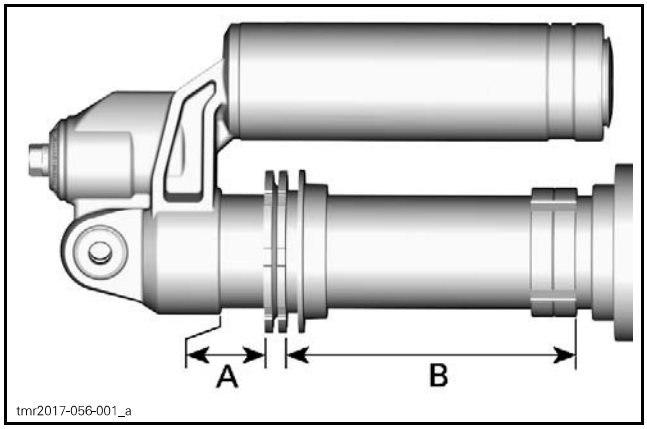

CROSSOVER ADJUSTMENT - REAR SHOCK
A. Spring preload
B. Crossover ring position

Clean threads with PULLEY FLANGE CLEANER (P/N 413 711 809).

Lubricate crossover ring threads with penetrating oil before adjusting.

Unlock jam nut and turn crossover ring.

Adjust to desired crossover rate.

Lock jam nut.

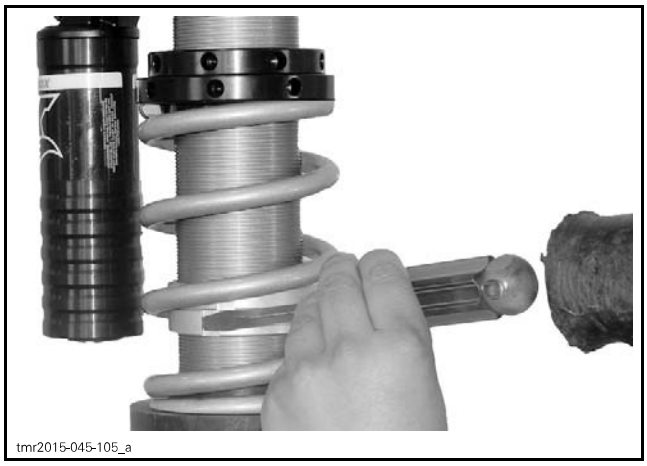

ADJUSTING SPRING CROSSOVER

SUSPENSION FACTORY SETTINGS

FRONT SUSPENSION			
ADJUSTMENT	FACTORY SETTING		
	MAVERICK X3	MAVERICK X3 X ds	MAVERICK X3 X rs
Spring preload (A)	36.8 mm (.724 in)	38.5 mm (1.516 in)	53 mm (2.087 in)
Crossover rings position (B)	122.8 mm (4.835 in)	120 mm (4.724 in)	71 mm (2.795 in)
Compression damping (low speed)	Position 2	2 turns counterclockwise from full stop	2 turns counterclockwise from full stop
Compression damping (high speed)	N/A	2 turns counterclockwise from full stop	3 turns counterclockwise from full stop
Rebound damping	N/A	12 ± 1 clicks counterclockwise from full stop	12 ± 1 clicks counterclockwise from full stop

REAR SUSPENSION			
ADJUSTMENT	FACTORY SETTING		
	MAVERICK X3	MAVERICK X3 X ds	MAVERICK X3 X rs
Spring preload (A)	89 mm (3.504 in)	96.7 mm (3.807 in)	105.8 mm (4.165 in)
Crossover rings position (B)	126.1 mm (4.965 in)	121.1 mm (4.768 in)	154.6 mm (6.087 in)
Compression damping (low speed)	Position 2	2 turns counterclockwise from full stop	2 turns counterclockwise from full stop
Compression damping (high speed)	N/A	3 turns counterclockwise from full stop	3 turns counterclockwise from full stop
Rebound damping	N/A	15 ± 1 clicks counterclockwise from full stop	12 ± 1 clicks counterclockwise from full stop

FRONT SUSPENSION

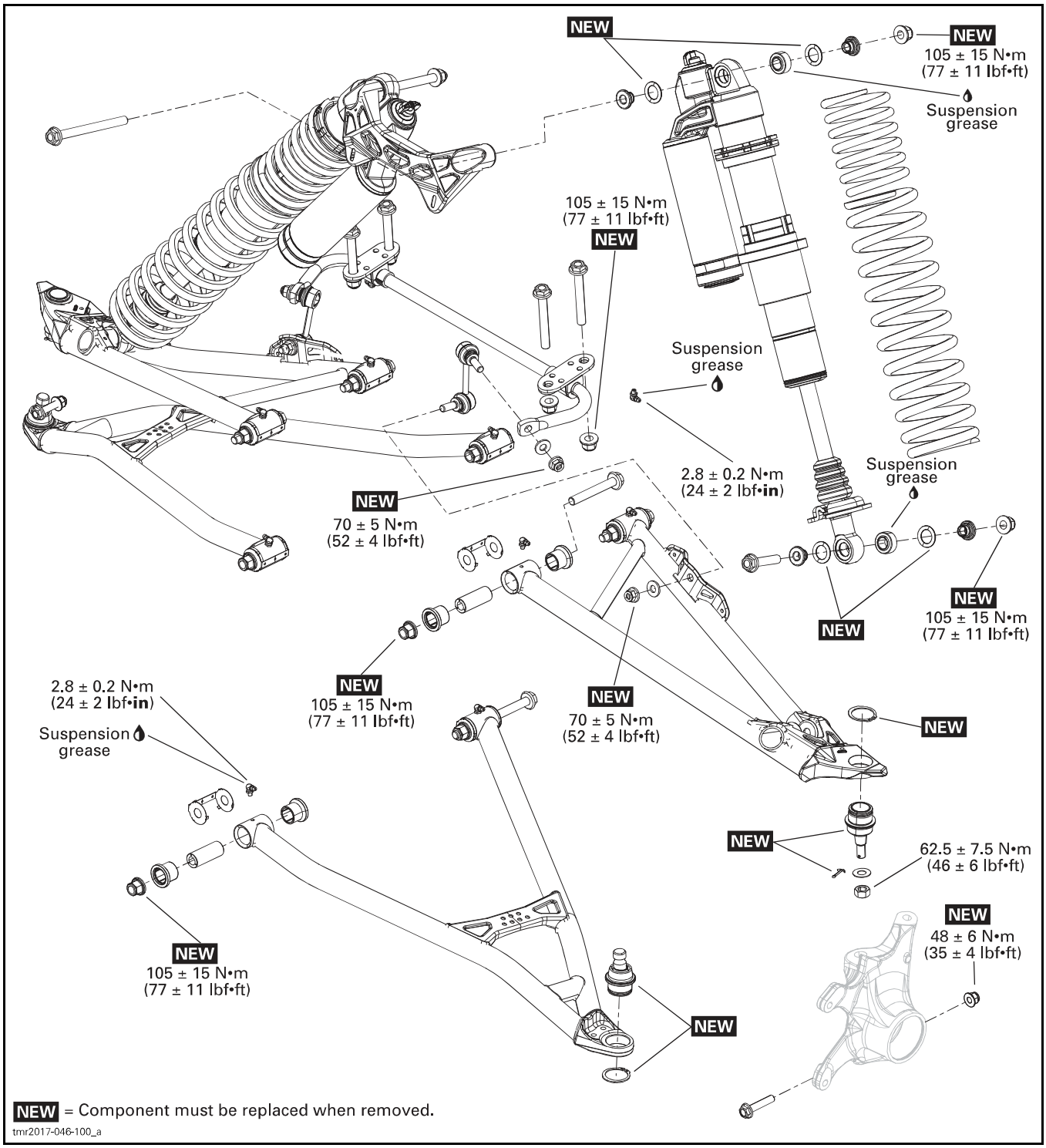

GENERAL

The procedure explained below is the same for the RH and LH sides unless otherwise noted.

ADJUSTMENT

For suspension adjustments refer to *SUSPENSION ADJUSTMENTS* subsection.

PROCEDURES

SHOCK ABSORBER

Removing the Shock Absorber

1. Safely lift and support the vehicle of the ground. Refer to *INTRODUCTION* subsection.
2. Remove bolts and nuts retaining shock absorber.
3. Remove shock absorber.

Inspecting the Shock Absorber

Remove spring from shock absorber. Refer to *SPRINGS* in *REAR SUSPENSION* subsection.

Secure the end of shock body in a vise with its rod upward.

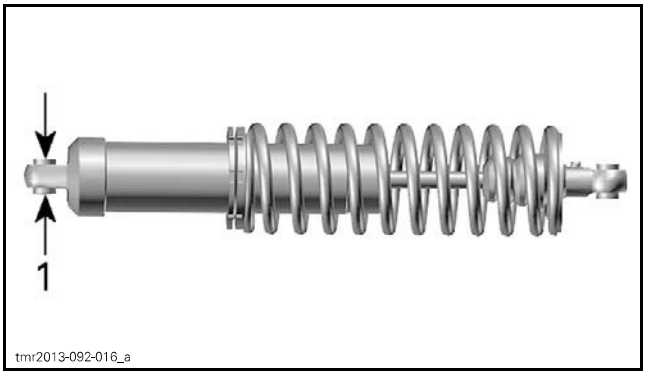

TYPICAL
1. Clamp here

NOTICE Do not clamp directly on shock body.

Extend and compress the piston several times over its entire stroke. Check that it moves smoothly and with uniform resistance.

Check the following conditions that will denote a defective shock:

– A skip or a hang back when reversing stroke at mid travel.
– Seizing or binding condition except at extreme end of either stroke.
– Oil leakage.
– A gurgling noise, after completing one full compression and extension stroke.
– Check for dent on the rod.

Replace if any faults are present.

Shock Absorber Spherical Bearing

For shock absorber spherical bearings inspection, cleaning and replacement, see *SUSPENSION* in *PERIODIC MAINTENANCE PROCEDURE* subsection.

Installing the Shock Absorber

The installation is the reverse of the removal procedure. However, pay attention to the following.

Make sure to install the proper type of shock absorber. Find the P/N on the lower cap of the cylinder.

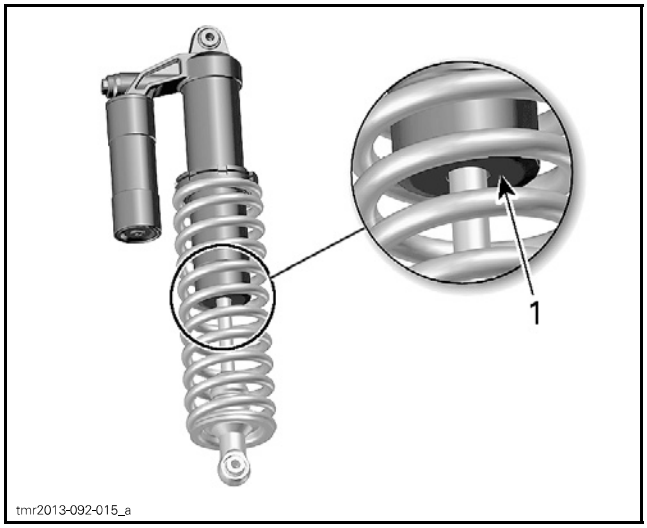

1. Shock P/N

Make sure to install the shock absorber with the reservoir towards inside.

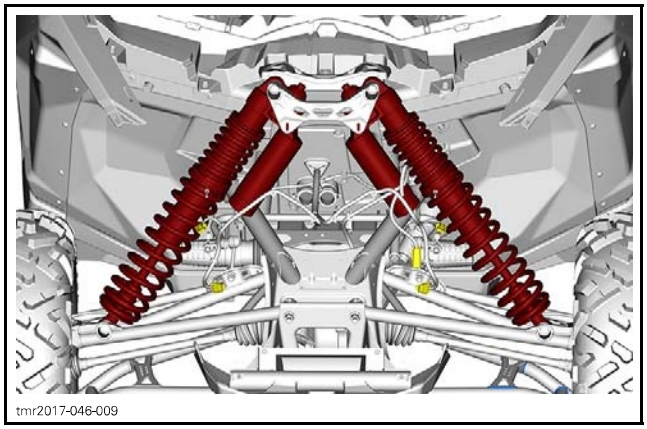

FRONT BODY MODULE REMOVED FOR CLARITY

Make sure to install the shock absorber with the rebound adjuster facing towards the rear, if equipped.

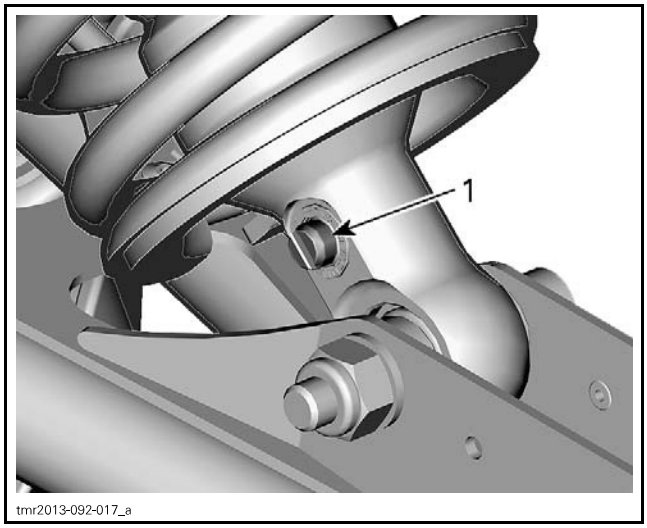

TYPICAL - RH SIDE SHOWN
1. Rebound adjuster

TIGHTENING TORQUE	
Shock absorber nuts	105 N•m ± 15 N•m (77 lbf•ft ± 11 lbf•ft)

Ensure left and right shocks have the same calibration. Refer to *SUSPENSION ADJUSTMENT* subsection.

SPRINGS

Removing the Spring

1. Remove shock absorber from vehicle. Refer to *SHOCK ABSORBERS* in this subsection.

Prior to remove the springs, mark the preload and crossover ring locations.

2. Unscrew the preload adjustment ring to unload springs.
3. Remove spring cap from shock absorber.
4. Remove spring from shock absorber.

Inspecting the Spring

Inspect the spring for damage.

Replace if necessary.

Installing the Spring

The installation is the reverse of the removal procedure.

LOWER SUSPENSION ARM

Removing the Lower Suspension Arm

1. Remove wheel, refer to *WHEELS AND TIRES* subsection.
2. Remove bolt and nut securing lower ball joint to knuckle.

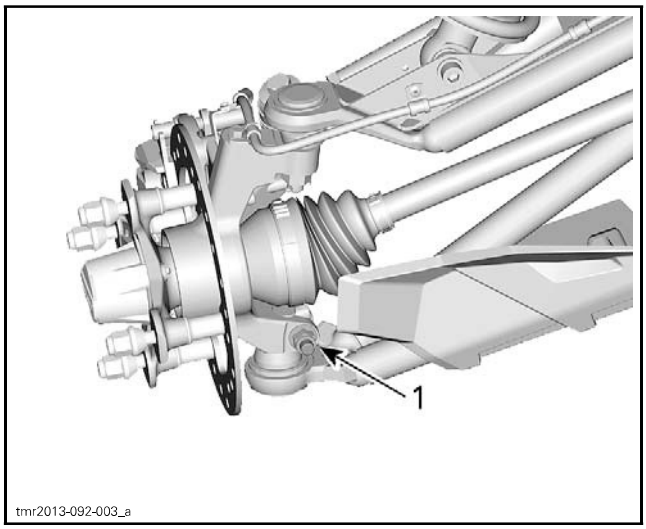

TYPICAL
1. Ball joint nut

3. Remove the following retaining nuts.

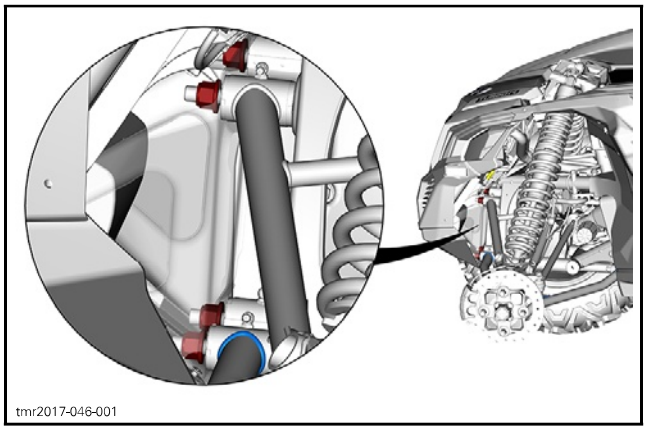

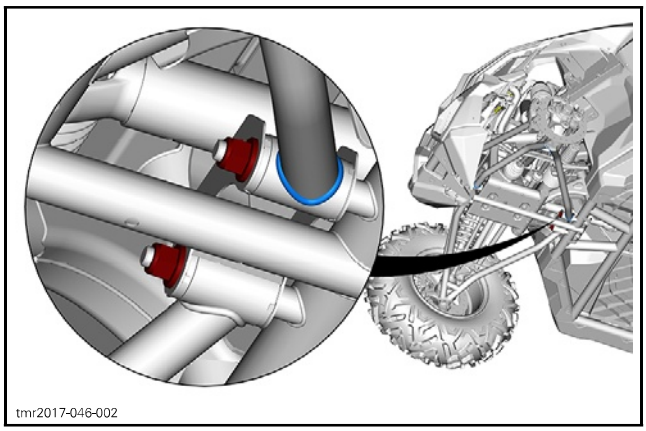

4. Slide the bumper and the arm towards front until it clears the screws, and remove the arm from vehicle.

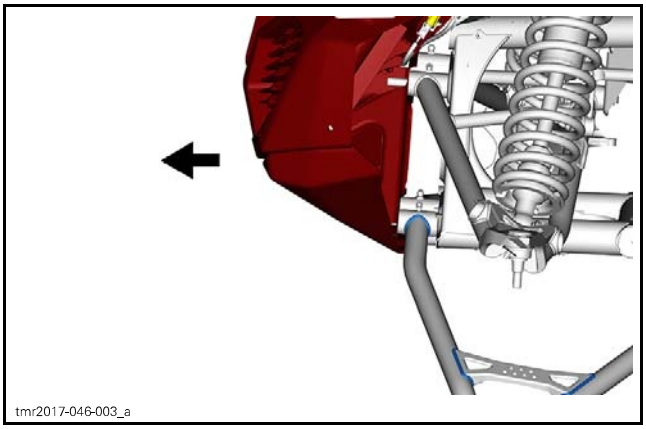

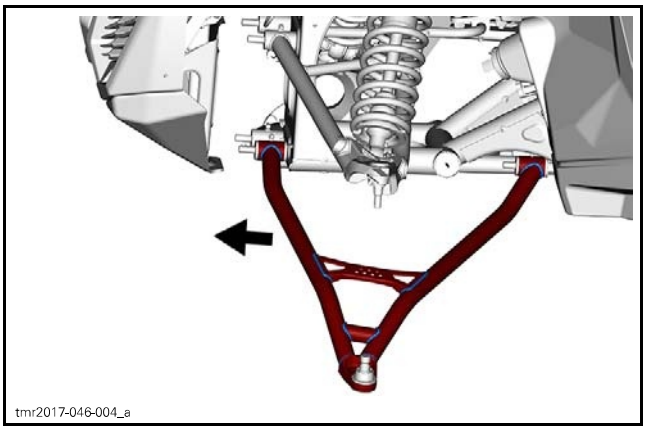

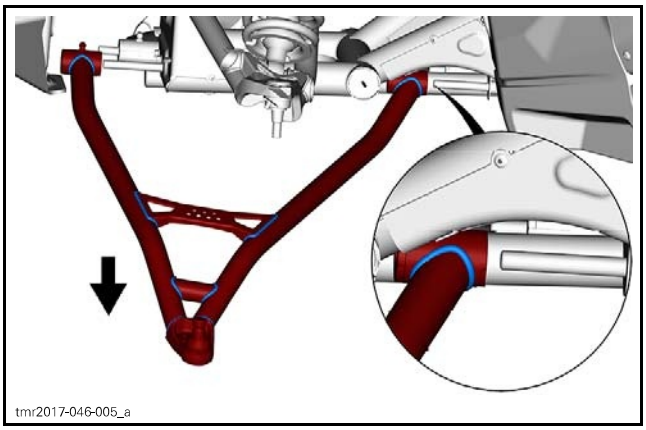

Installing the Lower Suspension Arm

The installation is the reverse of the removal procedure. However, pay attention to the following.

Refer to exploded view for appropriate tightening torques.

Lubricate suspension arm. Refer to *PERIODIC MAINTENANCE PROCEDURES* subsection.

UPPER SUSPENSION ARM

Removing the Upper Suspension Arm

1. Safely lift and support the vehicle off the ground. Refer to *INTRODUCTION* subsection.
2. Remove wheel, refer to *WHEELS AND TIRES* subsection.
3. Remove fasteners retaining brake hose to suspension arm.

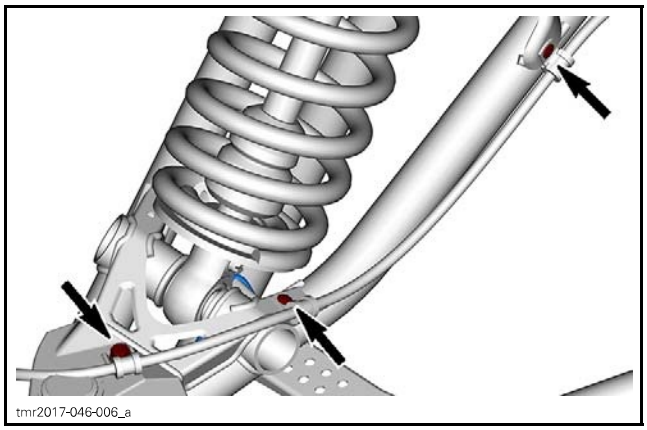

4. Remove and discard cotter pin securing ball joint nut.

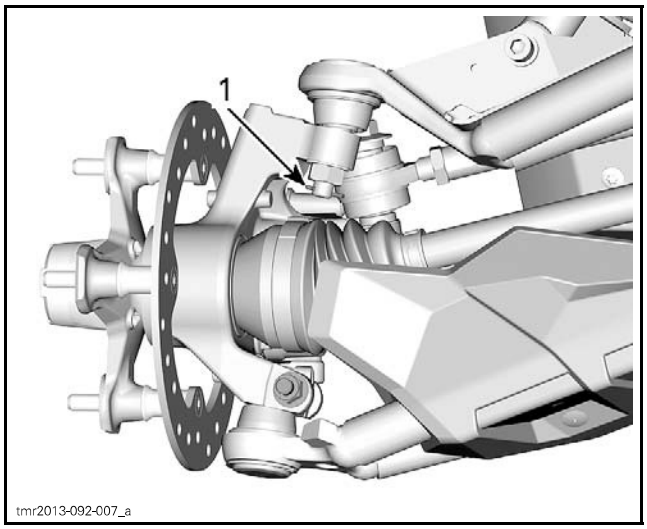

TYPICAL
1. Ball joint cotter pin

5. Remove ball joint nut and washer.

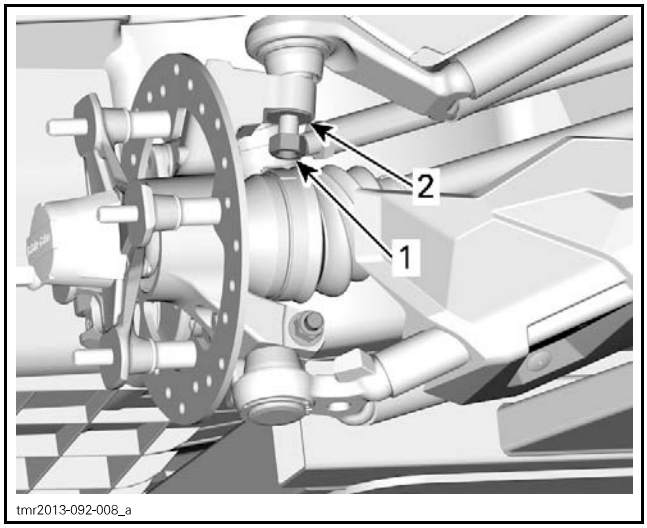

TYPICAL
1. *Ball joint nut*
2. *Ball joint washer*

6. Carefully move brake hose aside.
7. Using a plastic hammer, carefully hit on the knuckle side to separate ball joint from knuckle.

NOTE: A ball joint remover can be used if the ball joint is jammed into knuckle.

NOTICE Never hit on suspension arm to avoid damaging it permanently.

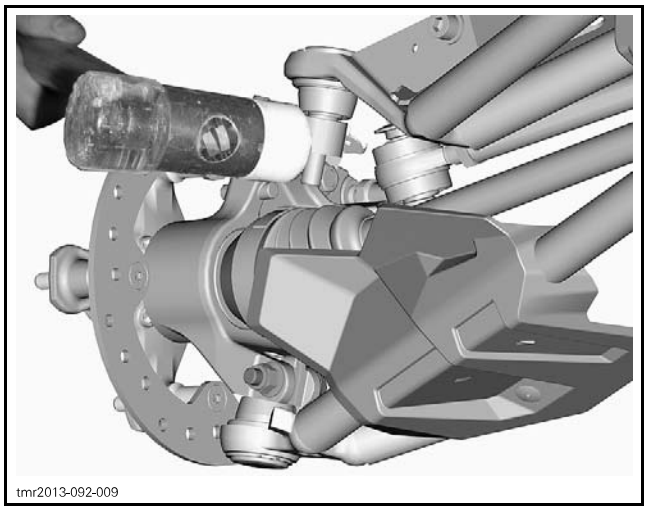

TYPICAL - CAREFULLY HIT ON KNUCKLE SIDE

8. Remove the following fasteners.

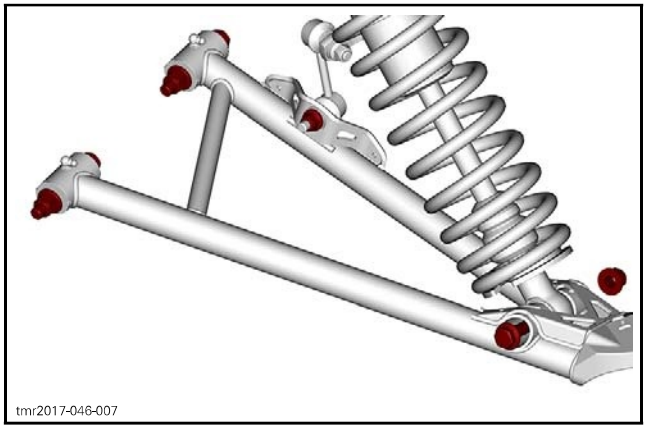

9. Remove suspension arm.

Installing the Upper Suspension Arm

The installation is the reverse of the removal procedure. However, pay attention to the following.

Refer to exploded view for appropriate tightening torques.

Install a new cotter pin to secure ball joint nut. Both end of cotter pin must be folded.

Lubricate suspension arm. Refer to *PERIODIC MAINTENANCE PROCEDURES* subsection.

SUSPENSION ARM BUSHINGS

Removing the Suspension Arm Bushings

1. Remove suspension arm from vehicle. Refer to *REMOVING THE SUSPENSION ARM* in this subsection.
2. Remove wear plates, inner sleeves and inner bushings from suspension arm.

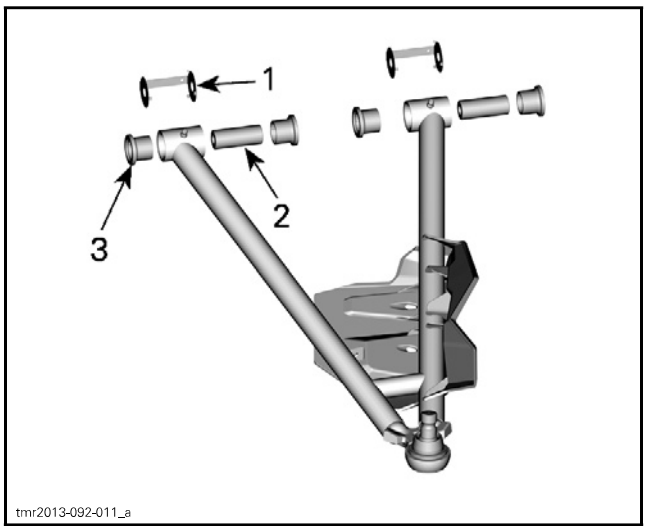

TYPICAL - LOWER SUSPENSION ARM
1. *Wear plate*
2. *Inner sleeve*
3. *Inner bushing*

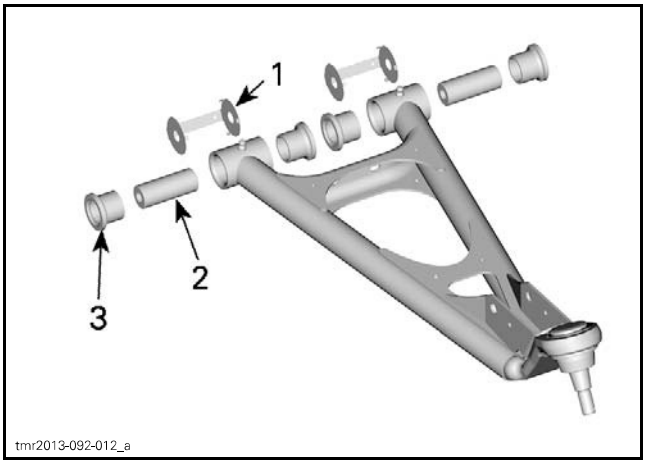

TYPICAL - UPPER SUSPENSION ARM
1. *Wear plate*
2. *Inner sleeve*
3. *Inner bushing*

Installing the Suspension Arm Bushings

The installation is the reverse of the removal procedure. However, pay attention to the following.

Lubricate suspension arm. Refer to *PERIODIC MAINTENANCE PROCEDURES* subsection.

BALL JOINTS

Removing the Ball Joint

1. Remove suspension arm from vehicle. Refer to *REMOVING THE SUSPENSION ARM* in this subsection.
2. Remove circlip from ball joint.

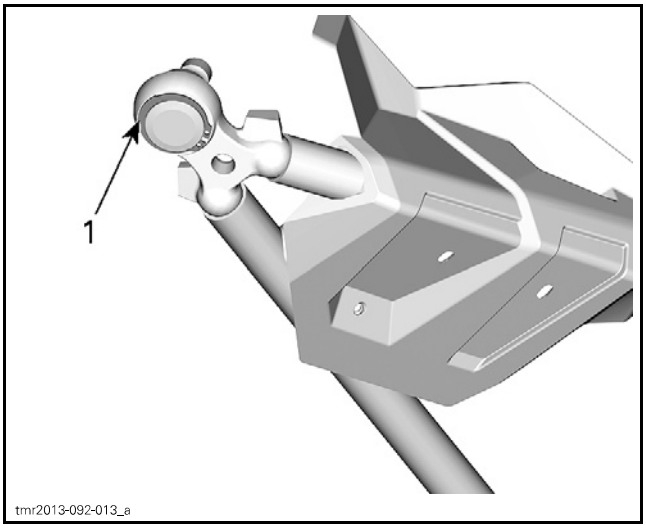

TYPICAL - LOWER BALL JOINT
1. *Circlip*

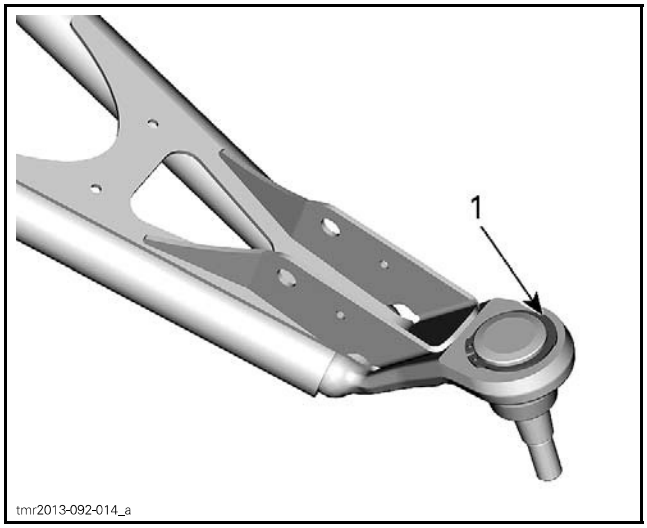

TYPICAL - UPPER BALL JOINT
1. *Circlip*

3. Install suspension arm on a press.
4. Use an appropriate ball joint remover.

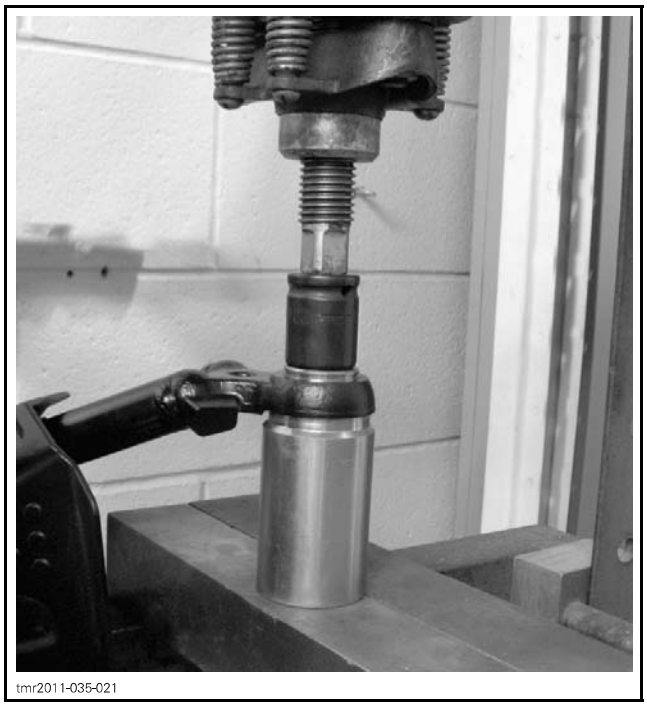

TYPICAL

5. Remove ball joint from suspension arm.

NOTICE **Make sure that suspension arm is properly supported on the press during ball joint removal.**

Installing the Ball Joint

The installation is the reverse of the removal procedure. However, pay attention to the following.

Install a new circlip to secure ball joint.

STABILIZER BAR

Removing the Stabilizer Bar

Remove wheel, refer to *WHEELS AND TIRES* subsection.

Remove the following retaining nuts and screws on both sides of vehicle.

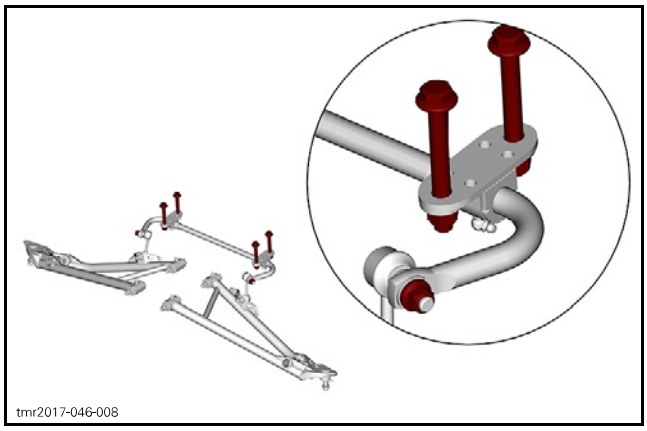

Remove stabilizer bar.

Inspecting the Stabilizer Bar

Check stabilizer bar for cracks, bending or other damages.

Check stabilizer bar links for cracks, wear or play.

Replace if necessary.

Installing the Stabilizer Bar

The installation is the reverse of the removal procedure. However, pay attention to the following.

Refer to exploded view for appropriate tightening torques.

Lubricate stabilizer bar. Refer to *PERIODIC MAINTENANCE PROCEDURES* subsection.

REAR SUSPENSION

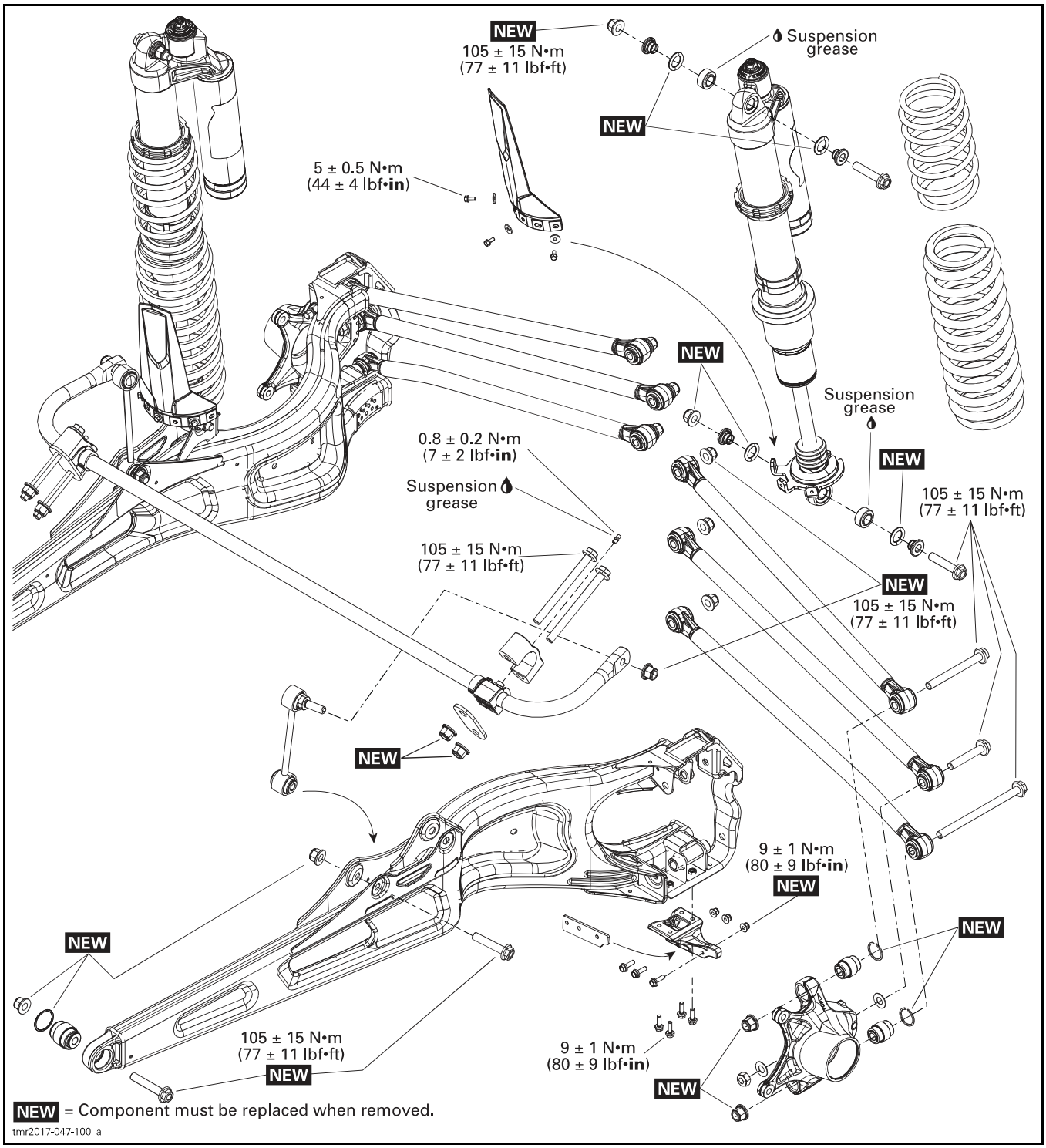

GENERAL

The procedure described below is the same for the RH and LH sides, unless otherwise instructed.

ADJUSTMENT

For suspension adjustments refer to *SUSPENSION ADJUSTMENTS* subsection.

PROCEDURES

SHOCK ABSORBERS

NOTE: It is recommended to replace shock absorbers in pairs.

Removing the Shock Absorber

1. Safely lift and support the vehicle off the ground. Refer to *INTRODUCTION* subsection.
2. Remove bolts and nuts retaining shock absorber.
3. Remove shock absorber.

Inspecting the Shock Absorber

Remove spring from shock absorber. Refer to *SPRINGS* in this subsection.

Secure the end of shock body in a vise with its rod upward.

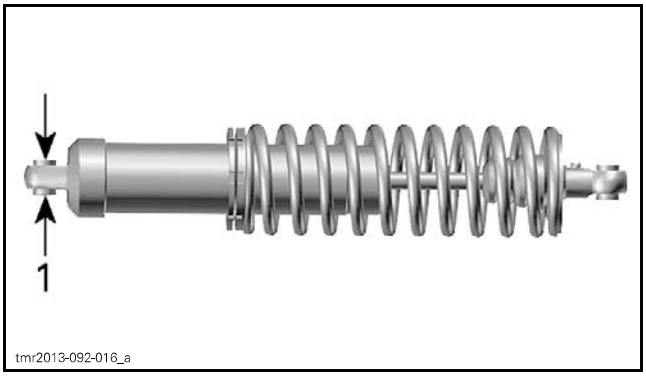

TYPICAL
1. Clamp here

NOTICE Do not clamp directly on shock body.

Extend and compress the piston several times over its entire stroke. Check that it moves smoothly and with uniform resistance with its rod upward.

Check the following conditions that will denote a defective shock:

– A skip or a hang back when reversing stroke at mid travel.
– Seizing or binding condition except at extreme end of either stroke.
– Oil leakage.
– A gurgling noise, after completing one full compression and extension stroke.

Replace if any faults are present.

Shock Absorber Spherical Bearing

For shock absorber spherical bearings inspection, cleaning and replacement, refer to *SUSPENSION* in *PERIODIC MAINTENANCE PROCEDURE* subsection.

Installing the Shock Absorber

The installation is the reverse of the removal procedure. However, pay attention to the following.

Make sure to install the proper type of shock absorber. Find the P/N on the lower cap of the cylinder.

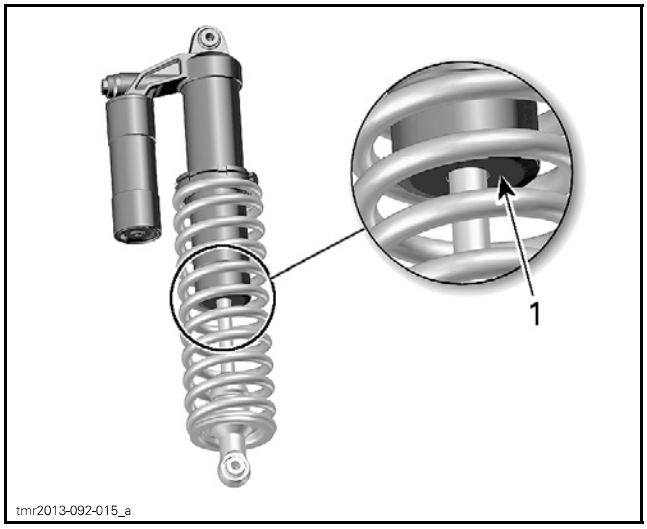

TYPICAL
1. Shock P/N

Make sure to install the shock absorber with the reservoir towards rear and inside.

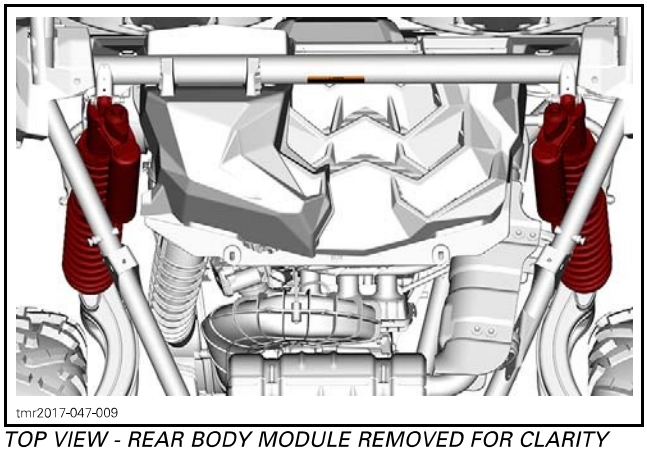

TOP VIEW - REAR BODY MODULE REMOVED FOR CLARITY

TIGHTENING TORQUE	
Shock absorber nuts and bolts	105 N•m ± 15 N•m (77 lbf•ft ± 11 lbf•ft)

Ensure left and right shocks have the same calibration. Refer to *SUSPENSION ADJUSTMENT* subsection.

SPRINGS

Removing the Spring

1. Remove shock absorber from vehicle. Refer to *SHOCK ABSORBERS* in this subsection.

Prior to remove the springs, mark the preload and crossover ring locations.

2. Unscrew the preload adjustment ring to unload springs.
3. Remove spring cap from shock absorber.
4. Remove spring from shock absorber.

Inspecting the Spring

Inspect the spring for damage.

Replace if necessary.

Installing the Spring

The installation is the reverse of the removal procedure.

STABILIZER BAR

Removing the Stabilizer Bar

Remove wheel, refer to *WHEELS AND TIRES* subsection.

Remove the following retaining nuts on both sides of vehicle.

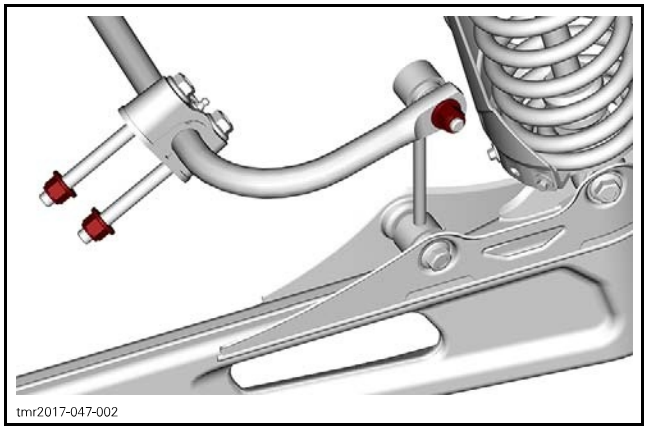
tmr2017-047-002

Remove stabilizer bar from vehicle.

Inspecting the Stabilizer Bar

Check stabilizer bar for cracks, bending or other damages.

Replace if necessary.

Installing the Stabilizer Bar

The installation is the reverse of the removal procedure. However, pay attention to the following.

Install new stabilizer bar nuts and tighten to specification.

Refer to exploded view for appropriate tightening torques.

Lubricate stabilizer bar. Refer to *PERIODIC MAINTENANCE PROCEDURES* subsection.

SUSPENSION ARM

Removing the Suspension Arm

Remove wheel, refer to *WHEELS AND TIRES* subsection.

Remove shock absorber. Refer to *SHOCK ABSORBER REMOVAL* in this subsection.

Remove fasteners securing brake hose line to upper suspension arm.

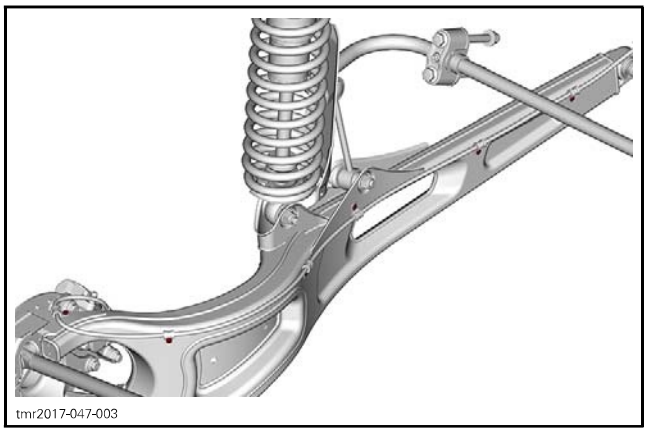
tmr2017-047-003

Remove the wheel hub. Refer to *REAR DRIVE* subsection.

NOTICE **Do not let caliper hangs by the hose and do not stretch or twist hose.**

Remove retaining nuts and bolts securing rear suspension arms and toe link to knuckle.

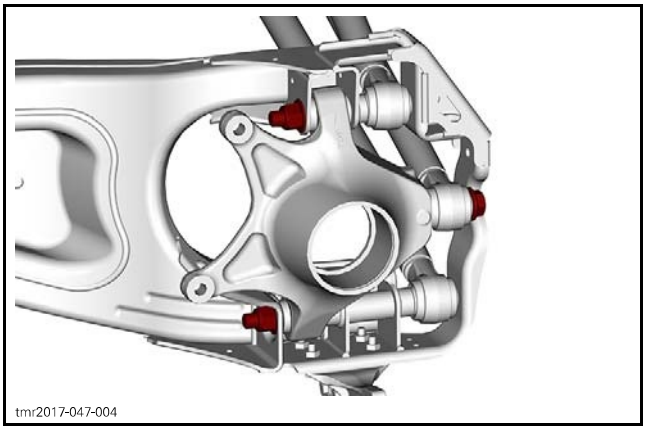

Remove suspension arm retaining nut and bolt, and stabilizer bar link lower retaining nut and bolt.

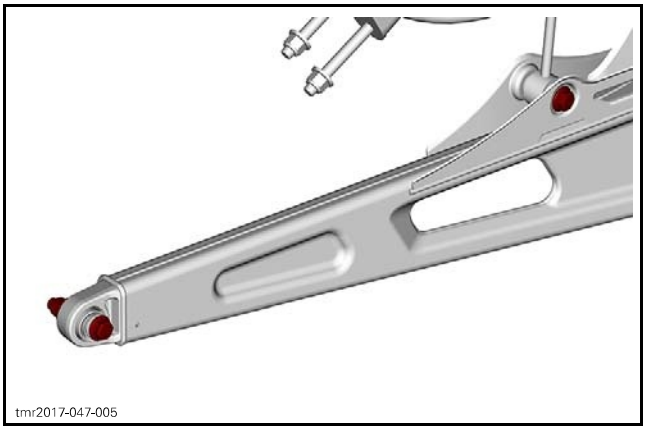

Remove the arm from vehicle.

Installing the Suspension Arm

The installation is the reverse of the removal procedure. However pay attention to the following.

Refer to exploded view for appropriate tightening torques.

REAR SUSPENSION ARMS

Removing the Rear Suspension Arms

1. Remove wheel, refer to *WHEELS AND TIRES* subsection.
2. Remove retaining nut and bolts securing rear suspension arms to knuckle and frame.

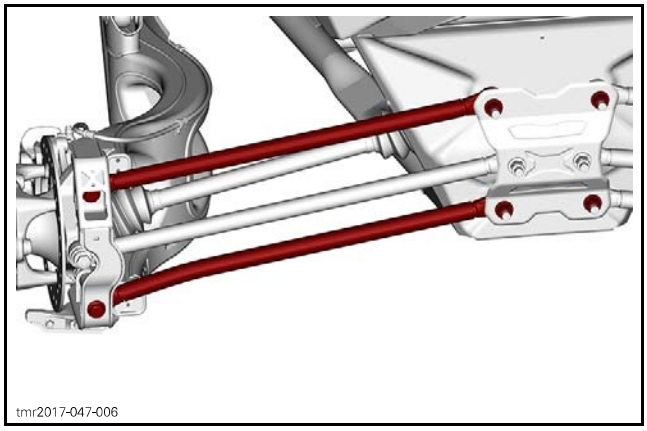

3. Remove the arms from vehicle.

Installing the Rear Suspension Arms

The installation is the reverse of the removal procedure. However pay attention to the following.

Refer to exploded view for appropriate tightening torques.

SUSPENSION ARM AND KNUCKLE SPHERICAL BEARINGS

Removing the Bearing

1. Remove suspension arm or knuckle from vehicle.
2. Remove the circlip.

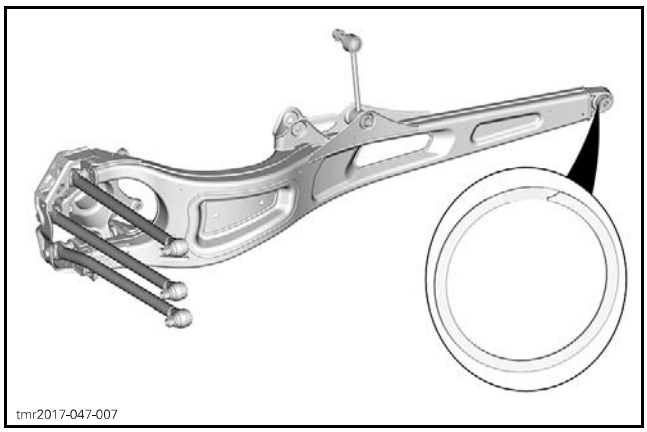

SUSPENSION ARM BEARING CIRCLIP

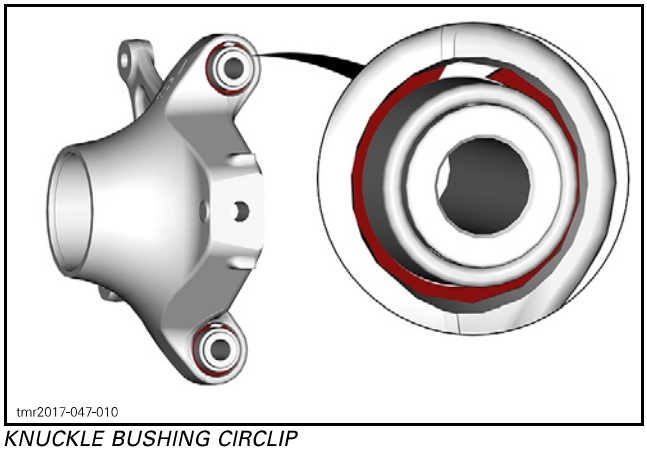

KNUCKLE BUSHING CIRCLIP

3. Use a press to remove the bearing from arm or knuckle.

Installing the Bearing

The installation is the reverse of the removal procedure. However, pay attention to the following.

Install a new circlip.

Lubricate bearings. Refer to *PERIODIC MAINTENANCE PROCEDURES* subsection.

REAR TOE LINK

Removing the Rear Toe Link

Remove retaining nuts and bolt at both ends of toe link.

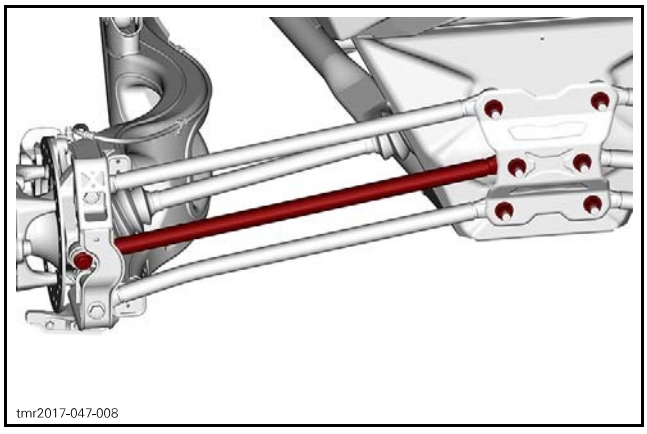

Remove rear toe link from vehicle.

Installing the Rear Toe Link

The installation is the reverse of the removal procedure. However, pay attention to the following.

Install new nuts and tighten to specification.

Refer to exploded view for appropriate tightening torques.

BRAKES

SERVICE TOOLS

Description	Part Number	Page
ECM ADAPTER TOOL	529 036 166	3
FLUKE 115 MULTIMETER	529 035 868	3

SERVICE PRODUCTS

Description	Part Number	Page
COSMO RUBBER GREASE	715 900 399	4
LOCTITE 243 (BLUE)	293 800 060	6
XPS BRAKES AND PARTS CLEANER (USA)	219 701 705	6
XPS BRAKES AND PARTS CLEANER	219 701 776	6

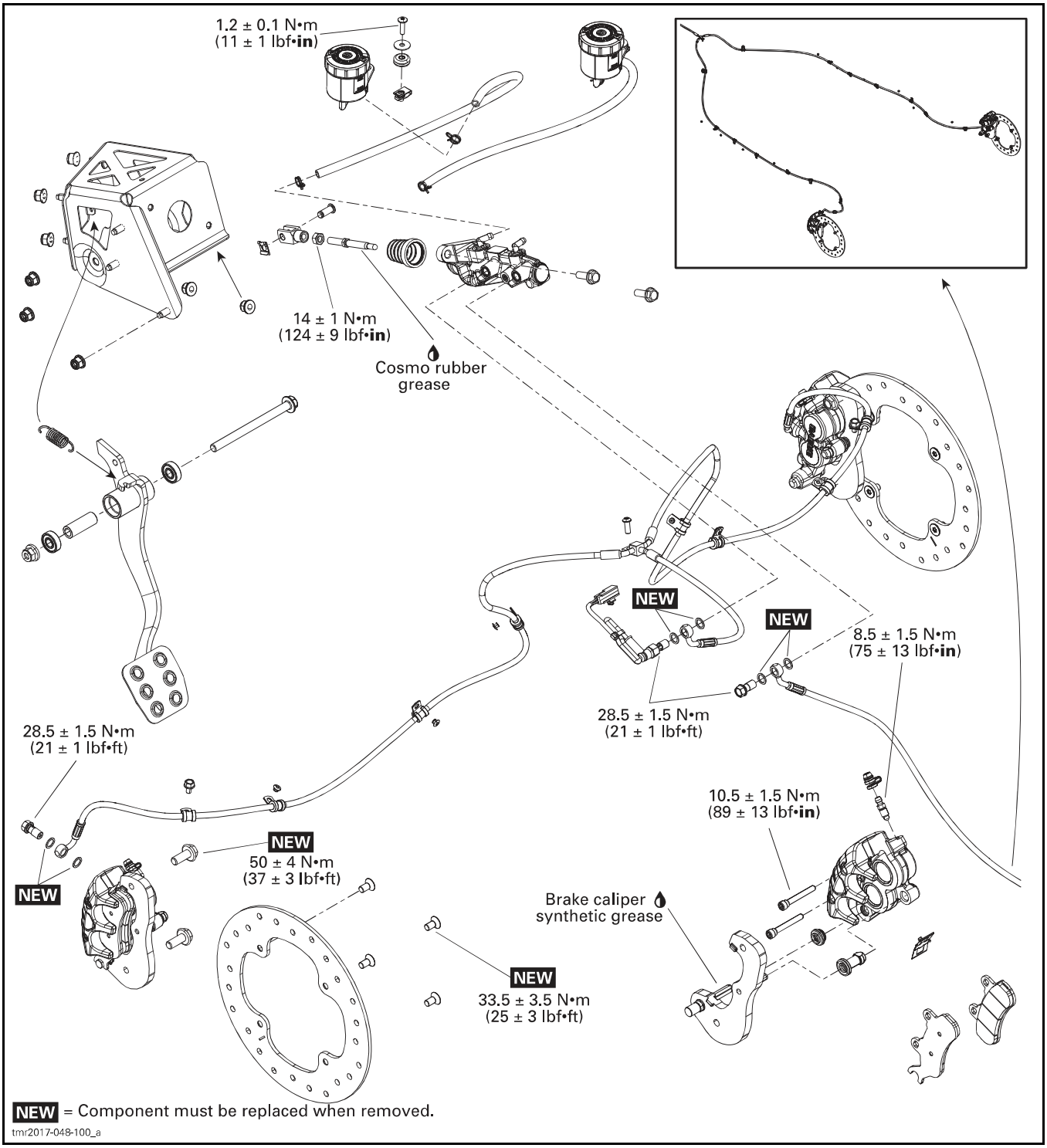
1.2 ± 0.1 N•m
(11 ± 1 lbf•in)
14 ± 1 N•m
(124 ± 9 lbf•in)
Cosmo rubber grease
NEW
NEW
8.5 ± 1.5 N•m
(75 ± 13 lbf•in)
28.5 ± 1.5 N•m
(21 ± 1 lbf•ft)
28.5 ± 1.5 N•m
(21 ± 1 lbf•ft)
10.5 ± 1.5 N•m
(89 ± 13 lbf•in)
NEW
50 ± 4 N•m
(37 ± 3 lbf•ft)
NEW
Brake caliper synthetic grease
NEW
33.5 ± 3.5 N•m
(25 ± 3 lbf•ft)
NEW = Component must be replaced when removed.
tmr2017-048-100_a

GENERAL

⚠ WARNING

Always check brake system operation after removing or servicing a brake component. If brake pedal feels spongy, make sure all components are properly installed and system is properly bled.

NOTICE Avoid spilling brake fluid on plastic, rubber or painted parts. Protect these parts with a rag when servicing brake system.

Sealing washers must be discarded and replaced with new ones every time a Banjo fitting is unscrewed.

Always clean the area around a brake component before servicing.

Use the following tools for electrical testing

REQUIRED TOOL	
FLUKE 115 MULTIMETER (P/N 529 035 868)	
ECM ADAPTER TOOL (P/N 529 036 166)	

INSPECTION

BRAKE SYSTEM PRESSURE VALIDATION

NOTICE Do not pump up the brake pedal repeatedly before doing the validation.

REQUIRED TOOLS	
Compression force gauge	
Ruler	

1. Position a ruler perpendicularly to brake pedal.

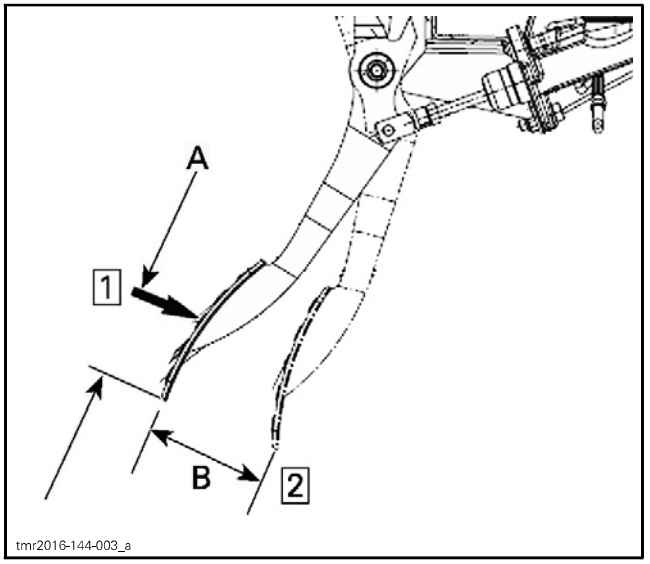

tmr2016-144-003_a

Step 1: Position compression force gauge at distance A
Step 2: Push brake pedal from distance B

A. 41 mm ± 5 mm (1.6 in ± .2 in)
B. 70 mm (2-3/4 in)



tmr2011-037-112

BRAKE PEDAL LOAD AT 70 MM
Minimum 200 N (45 lbf)

2. If load reading is not in accordance with the specification:
   2.1 Clean and inspect the brake system.
   2.2 Bleed brake system.

   NOTE: Refer to *PERIODIC MAINTENANCE PROCEDURES* subsection.

PROCEDURES

BRAKE LIGHT SWITCH

Brake Light Switch Location

Brake light switch is located underneath LH dashboard on master cylinder.

Testing the Brake Light Switch Resistance

1. Disconnect brake light switch connector.
2. Check switch operation as follows.

BRAKE LIGHT SWITCH POSITION	PIN		RESISTANCE
Firmly pushed	1	2	Close to 0 Ω
Released			Infinite (OL)

Replace switch as required.

If the switch tests good, verify wire continuity between harness connector and ECM-B connector.

ECM-B CONNECTOR PIN	HARNESS CONNECTOR WIRES	RESISTANCE
C-3	RED/ORANGE	Close to 0 Ω

NOTE: If only the LH taillight does not work, check brake relay (R8) in fuse box 1.

Replacing the Brake Light Switch

1. Disconnect brake light switch connector.
2. Drain front brake line.
3. Remove brake light switch from master cylinder.

NOTE: Use shop rags to catch any spilled brake fluid.

4. Install new sealing washers.
5. Install new brake light switch on master cylinder.

TIGHTENING TORQUE	
Brake light switch	28.5 N•m ± 1.5 N•m (21 lbf•ft ± 1 lbf•ft)

6. Connect brake light switch connector.
7. Refill and bleed brake system. Refer to *PERIODIC MAINTENANCE PROCEDURES* subsection.

MASTER CYLINDER

Removing the Master Cylinder

1. Drain brake system, refer to *PERIODIC MAINTENANCE PROCEDURES* subsection.
2. Remove / disconnect:
   1. Master cylinder push rod clip
   2. Brake light switch connector
   3. Brake light switch and rear brake hose screw.
3. Remove / disconnect:
   1. Brake oil reservoir hoses
   2. Master cylinder screws.
4. Remove master cylinder from vehicle.

Inspecting the Master Cylinder

Check boot for crack.

Check rod for wear and scratch.

Check master cylinder housing and reservoir for leaks or damage.

Installating the Master Cylinder

The installation is the reverse of the removal procedure. However, pay attention to the following.

Install new sealing washers.

TIGHTENING TORQUE	
Rear brake hose screw	28.5 N•m ± 1.5 N•m (21 lbf•ft ± 1 lbf•ft)
Brake light switch	

SERVICE PRODUCT	
Push rod end lubrication	COSMO RUBBER GREASE (P/N 715 900 399)
Master cylinder boot lubrication	

Refill and bleed brake system. Refer to *PERIODIC MAINTENANCE PROCEDURES* subsection.

Adjust master cylinder rod. Refer to *ADJUSTING THE MASTER CYLINDER ROD* in this subsection.

Adjusting the Master Cylinder Rod

1. Loosen locking nut of master cylinder rod.

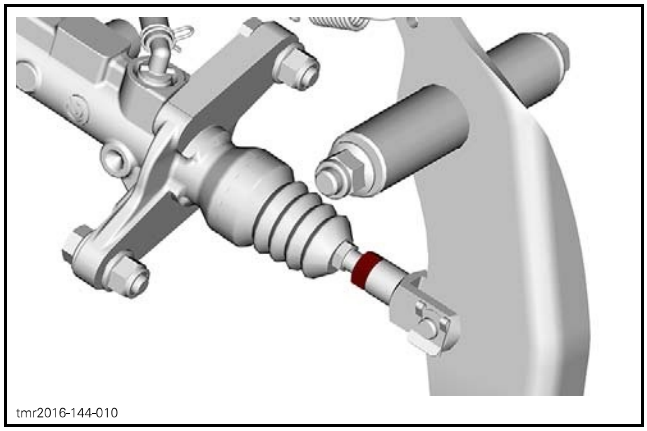

TYPICAL

2. Move brake pedal up and down to check if there is a free play.

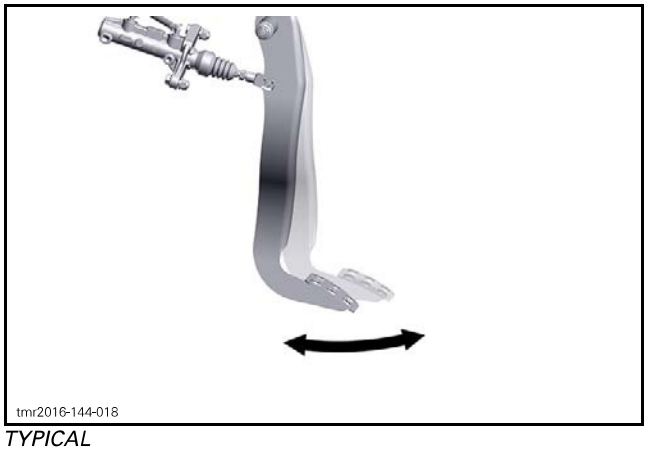

TYPICAL

3. Rotate master cylinder rod to generate a free play according to specification.

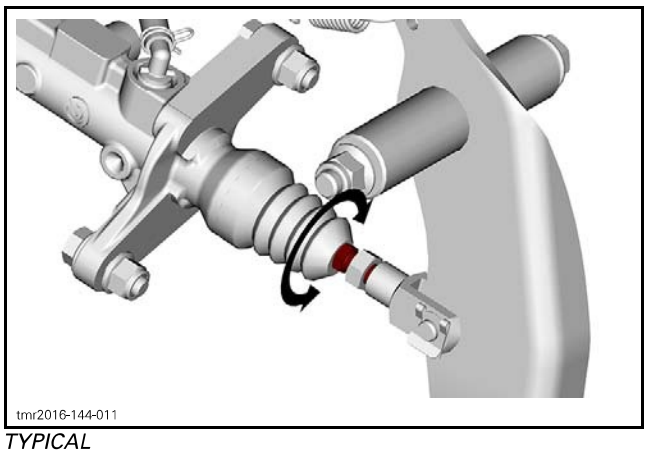

TYPICAL

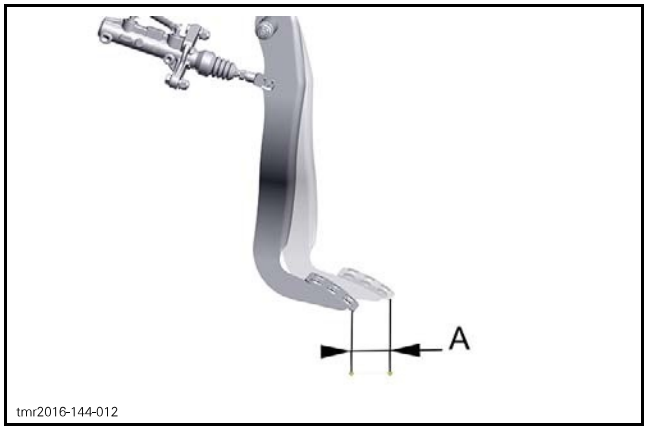

TYPICAL
A. Free play

BRAKE PEDAL FREE PLAY
3.5 mm ± 1.5 mm (1/8 in ± 1/16 in)

4. Tighten locking nut of master cylinder rod to specification.

TIGHTENING TORQUE	
Rod locking nut	14 N•m ± 1 N•m (124 lbf•**in** ± 9 lbf•**in**)

CALIPER

Removing the Caliper

1. Remove wheel. Refer to *WHEELS AND TIRES* subsection.
2. If caliper is removed from vehicle for replacement, remove brake hose screw.

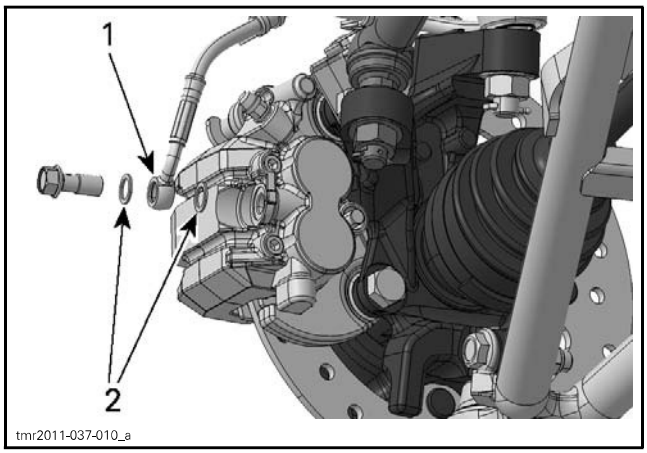

TYPICAL - FRONT CALIPER SHOWN
1. Brake hose
2. Sealing washers

3. Remove screws securing caliper support to knuckle.

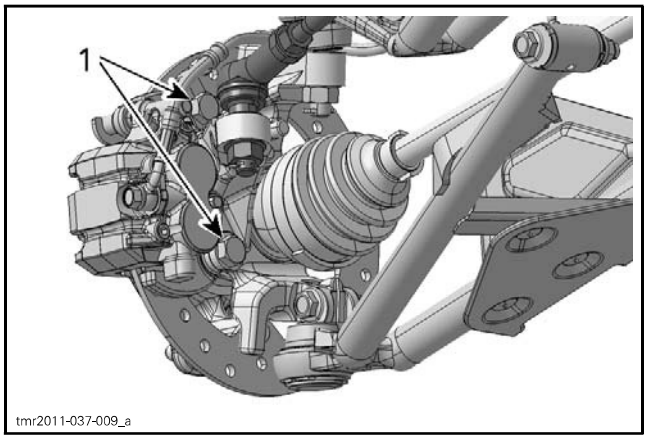

TYPICAL - FRONT CALIPER SHOWN
1. Caliper screws

4. Place caliper assembly onto a support.

NOTICE **Do not let caliper hangs by the hose and do not stretch or twist hose.**

Installing the Caliper

The installation is the reverse of the removal procedure. However, pay attention to the following.

If caliper was removed for replacement:
– Install new sealing washers.
– Refill and bleed brake system. Refer to *PERIODIC MAINTENANCE PROCEDURES* subsection.

TIGHTENING TORQUE	
Brake hose screw	28.5 N•m ± 1.5 N•m (21 lbf•ft ± 1 lbf•ft)
Caliper retaining screw	50 N•m ± 4 N•m (37 lbf•ft ± 3 lbf•ft) + LOCTITE 243 (BLUE) (P/N 293 800 060)

BRAKE PADS

Replacing the Brake Pads

1. Loosen brake pad pins.
2. Remove caliper from knuckle. Refer to *REMOVING THE CALIPER* in this subsection.
3. Remove and discard brake pad pins and pads.

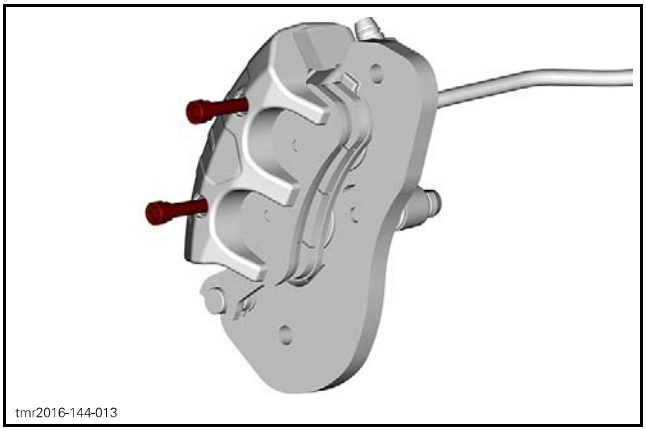
tmr2016-144-013

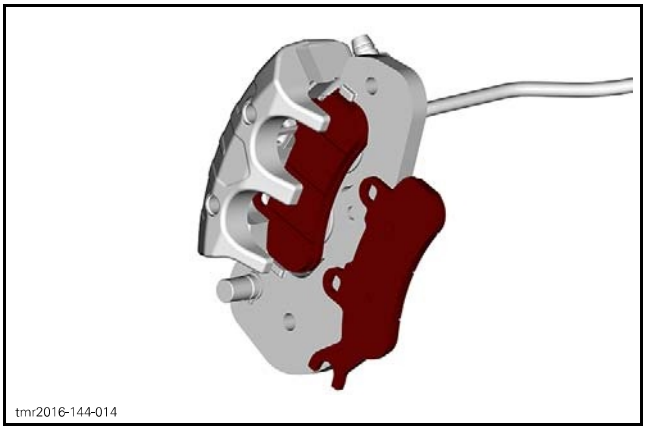
tmr2016-144-014

4. Use XPS BRAKES AND PARTS CLEANER (USA) (P/N 219 701 705) or XPS BRAKES AND PARTS CLEANER (P/N 219 701 776) to clean pistons end.
5. Push caliper pistons inward.

NOTE: To avoid damaging pistons, use an old pad to push it into the caliper using a C-clamp.

6. Ensure brake pad spring is properly positioned onto caliper.

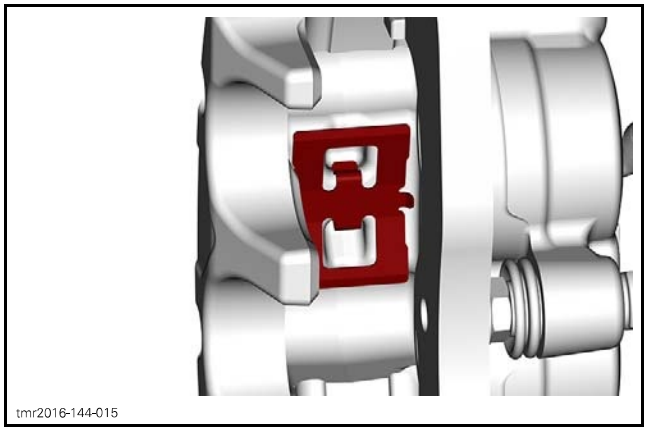
tmr2016-144-015

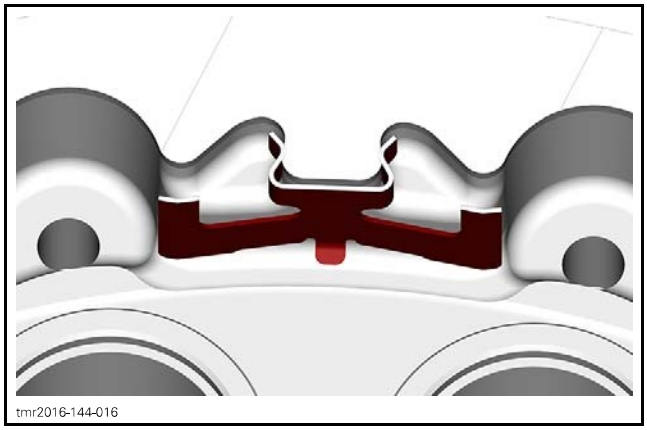
tmr2016-144-016

7. Install new brake pads.
8. Install new brake pad pins.
9. Install caliper on knuckle, refer to *INSTALLING THE CALIPER* in this subsection.
10. Tighten brake pad pins to specification.

TIGHTENING TORQUE	
Brake pad pin	10.5 N•m ± 1.5 N•m (93 lbf•**in** ± 13 lbf•**in**)

BRAKE DISC

Inspecting the Brake Disc

Check disc surfaces for scratches or grooves on both sides.

Measure thickness and warpage of the disc. Ensure measures are as per specifications. Refer to *TECHNICAL SPECIFICATIONS*.

NOTICE **Do not machine Brake discs.**

Replacing the Brake Disc

1. Remove caliper from knuckle. Refer to *REMOVING THE CALIPER* in this subsection.
2. Remove wheel hub. Refer to *FRONT DRIVE* or *REAR DRIVE* subsection.
3. Remove brake disc screws.

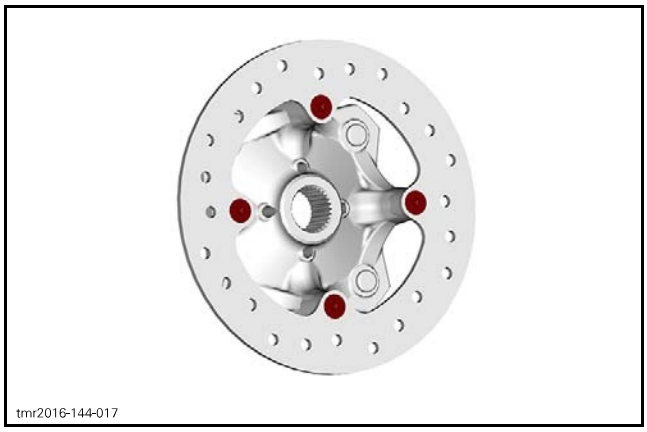

4. Replace brake disc.
5. Install new brake disc screws.
6. Tighten brake disc screws to specification.

TIGHTENING TORQUE	
Brake disc screw	33.5 N•m ± 3.5 N•m (25 lbf•ft ± 3 lbf•ft)

7. Install wheel hub, then caliper.
8. Install new cotter pin to secure wheel hub nut.

BODY

BODY

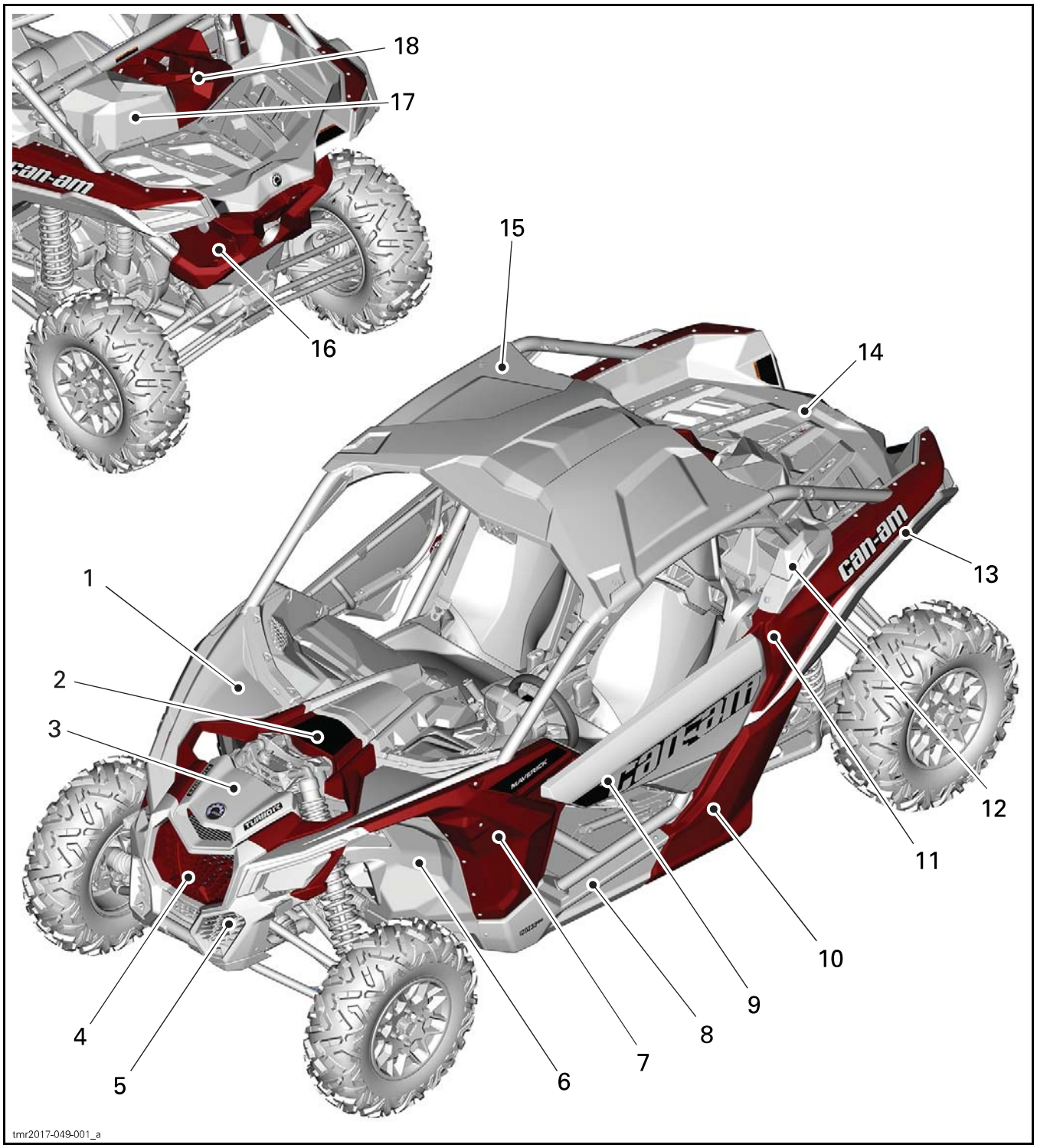

1. *Front fender*
2. *Fixed hood*
3. *Fascia cover*
4. *Radiator grille*
5. *Front fascia*
6. *Front bulkhead*
7. *Front lateral panel*
8. *Central lateral panel*
9. *Door*
10. *Rear lateral panel*
11. *Rear fender*
12. *Cage trim*
13. *Rear fender deflector*
14. *Rear rack*
15. *Roof*
16. *Rear facia*
17. *Air box cover*
18. *Intercooler grille*

COCKPIT

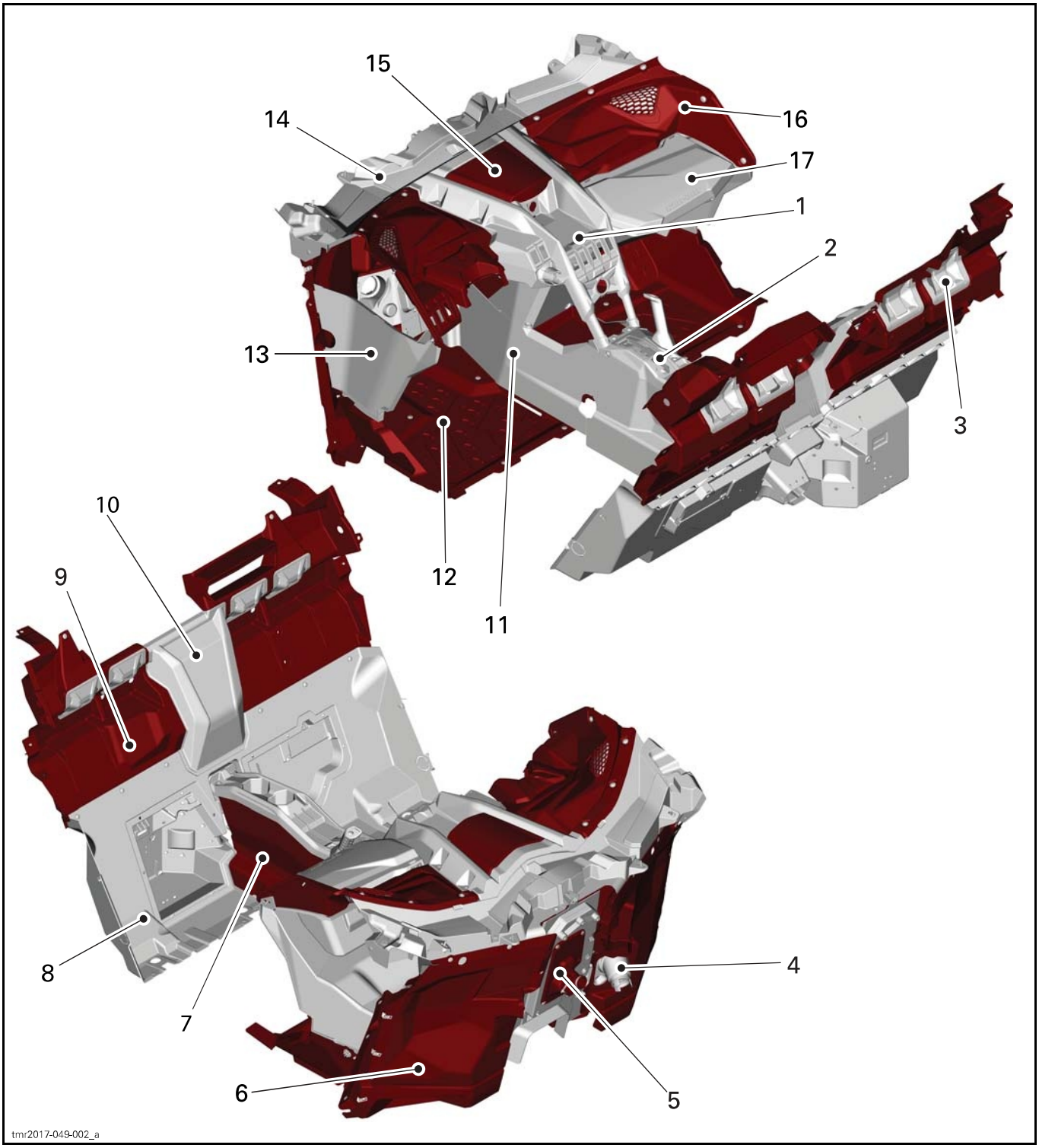

1. *Upper console*
2. *Console*
3. *Rear upper bulkhead cap*
4. *Steering column boot*
5. *Coolant hose boot*
6. *Front bulkhead*
7. *Rear console panel*
8. *Rear lower bulkhead*
9. *Rear upper bulkhead*
10. *Rear service cover*
11. *Front console panel*
12. *Floor panel*
13. *Kick panel*
14. *Dashboard deflector*
15. *Front service cover*
16. *Dashboard*
17. *Glove box*

FRONT GRILLE, FENDER, AND HOOD

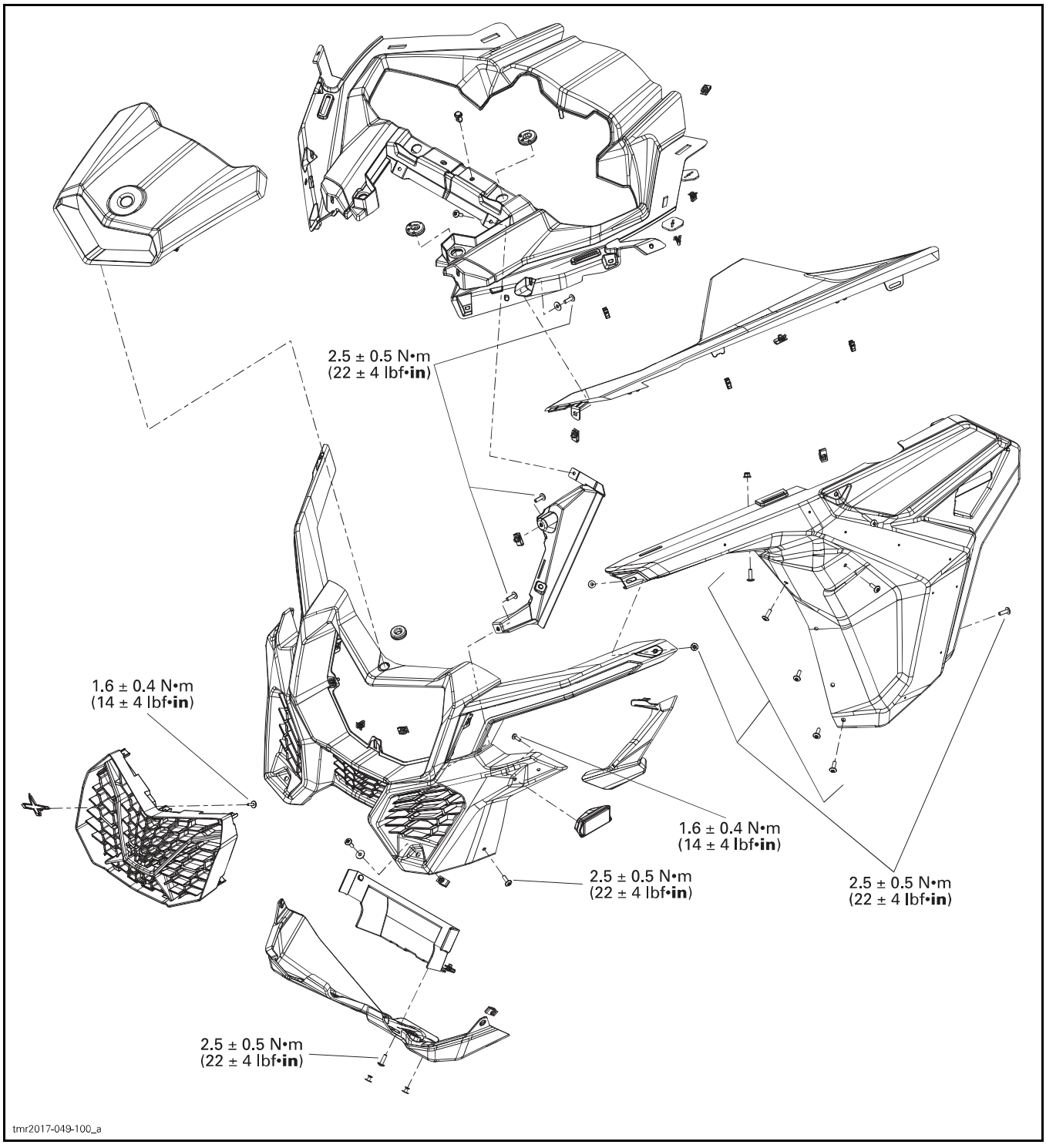

CENTRAL LATERAL PANEL AND DOOR

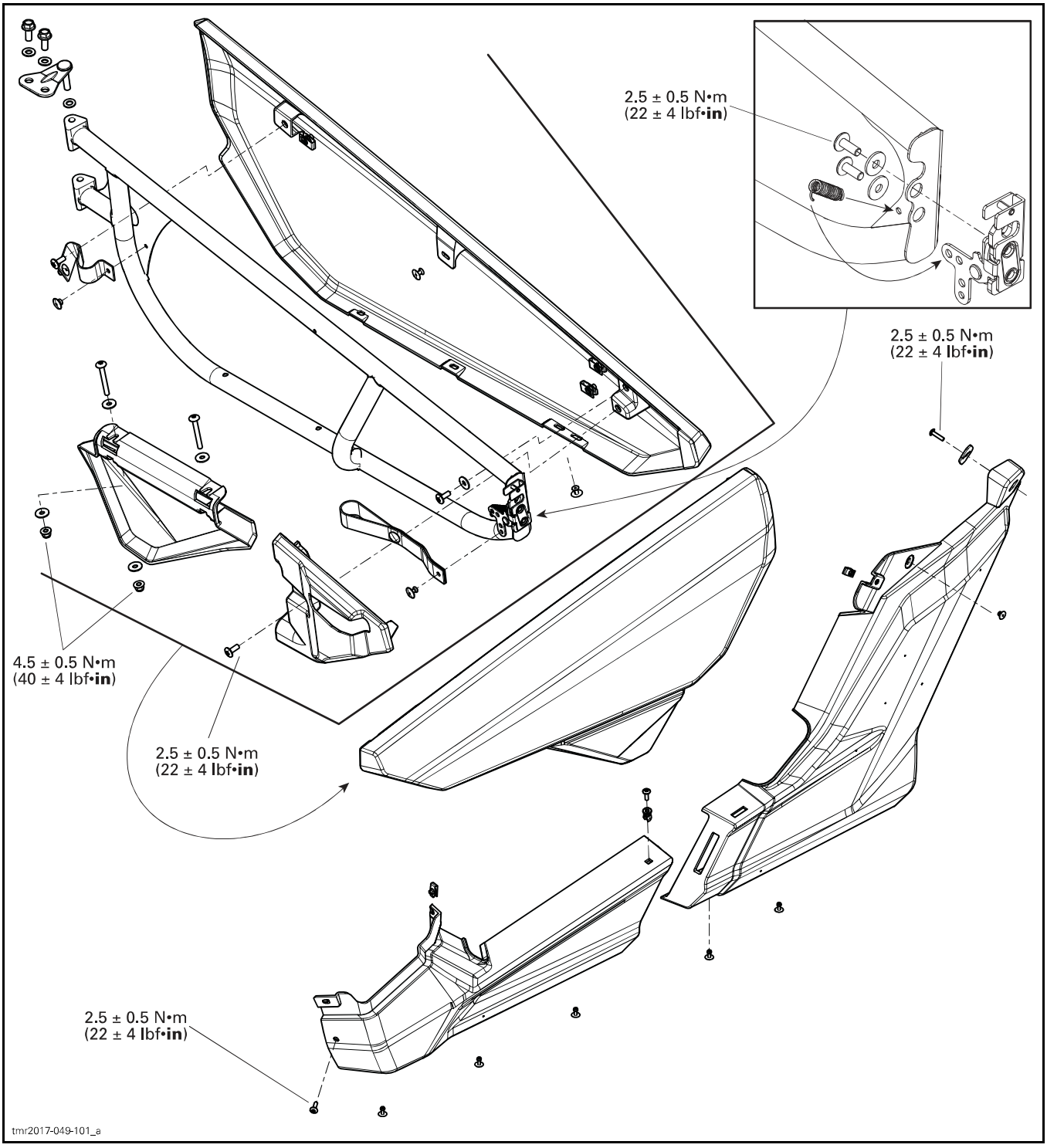

REAR BULKHEAD AND CONSOLE SIDE PANELS

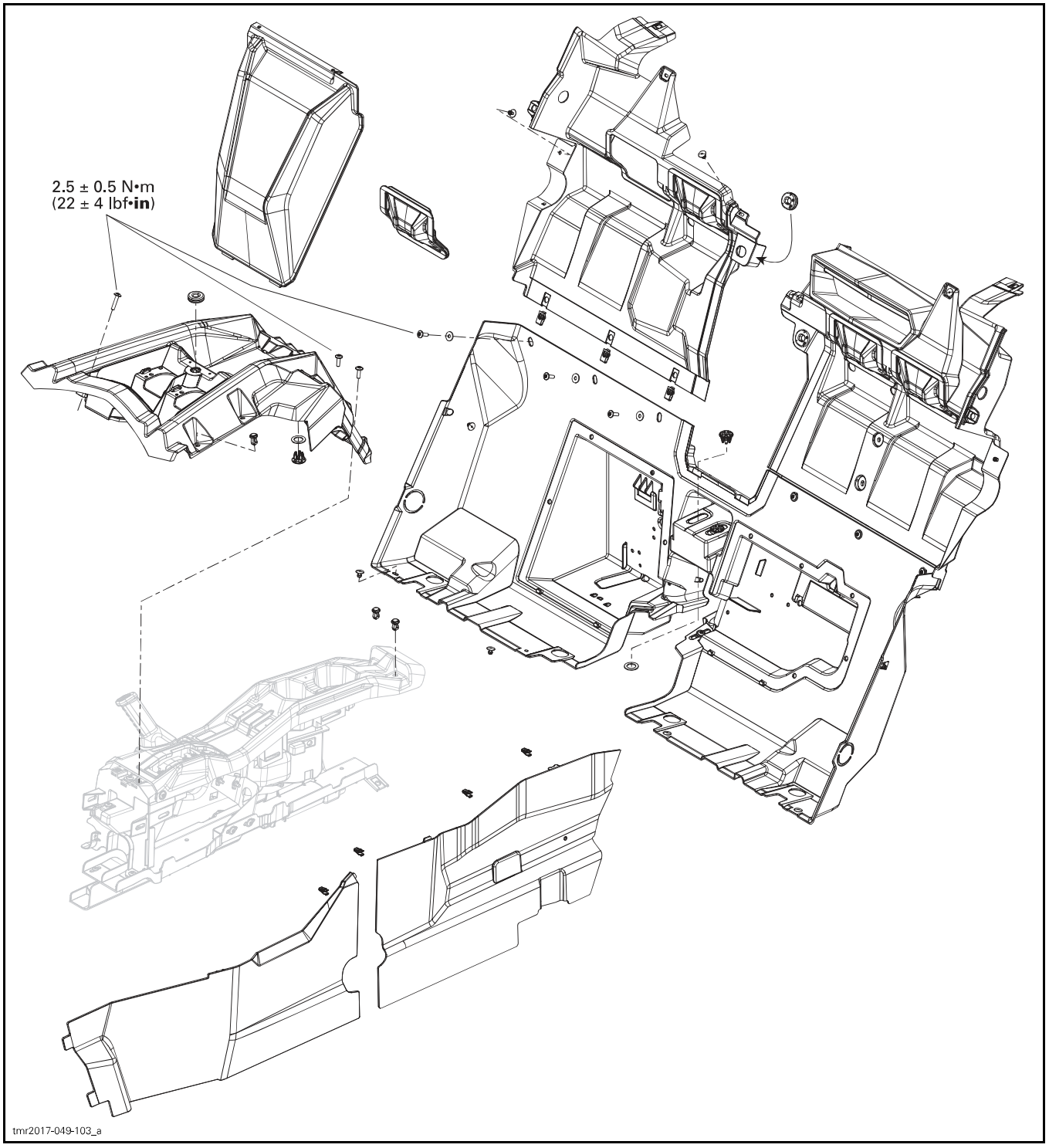

CONSOLE

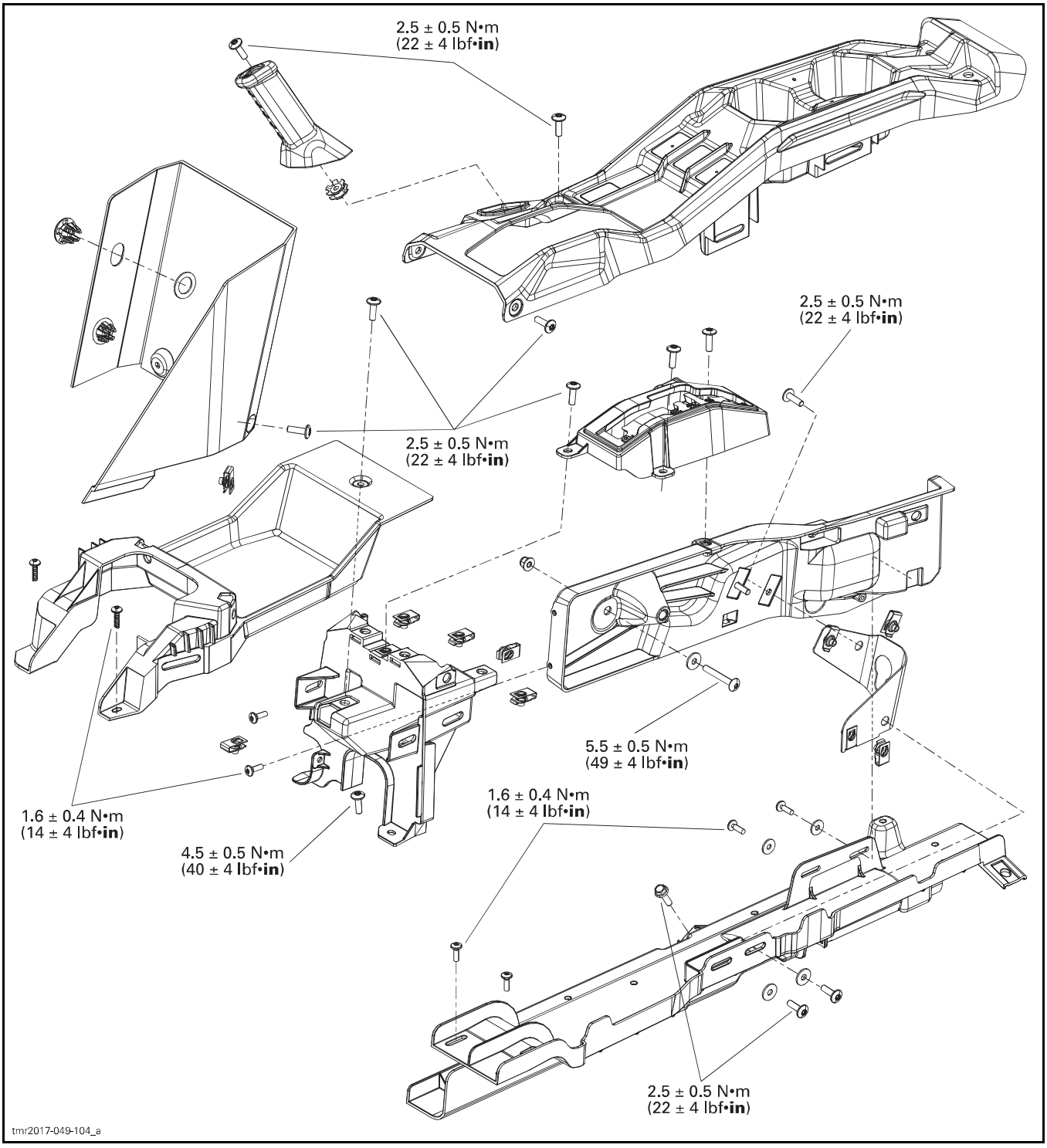
2.5 ± 0.5 N•m
(22 ± 4 lbf•in)
2.5 ± 0.5 N•m
(22 ± 4 lbf•in)
2.5 ± 0.5 N•m
(22 ± 4 lbf•in)
5.5 ± 0.5 N•m
(49 ± 4 lbf•in)
1.6 ± 0.4 N•m
(14 ± 4 lbf•in)
1.6 ± 0.4 N•m
(14 ± 4 lbf•in)
4.5 ± 0.5 N•m
(40 ± 4 lbf•in)
2.5 ± 0.5 N•m
(22 ± 4 lbf•in)
tmr2017-049-104_a

REAR FENDER AND REAR RACK

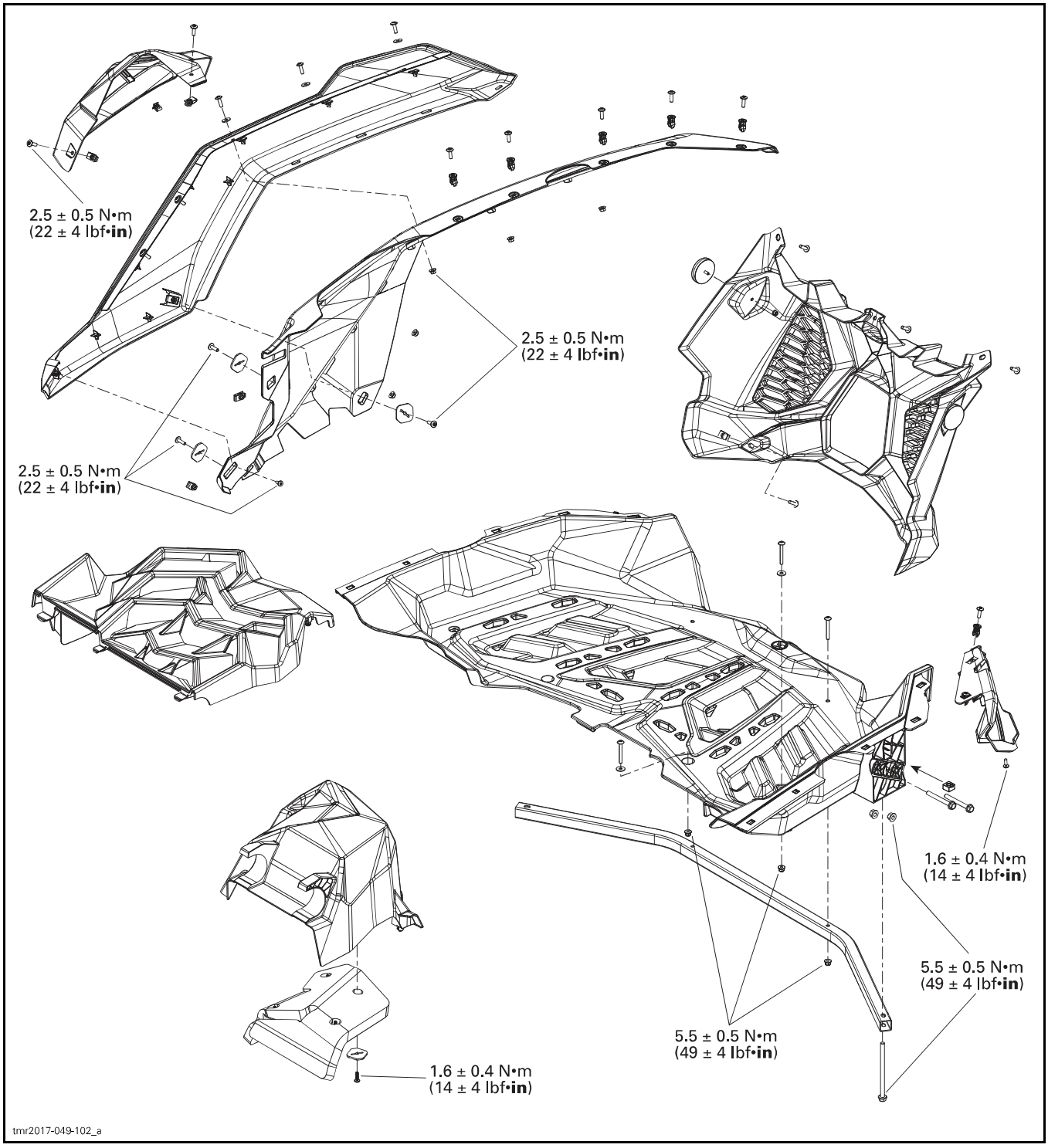

FRONT LH BULKHEAD AND DASHBOARD

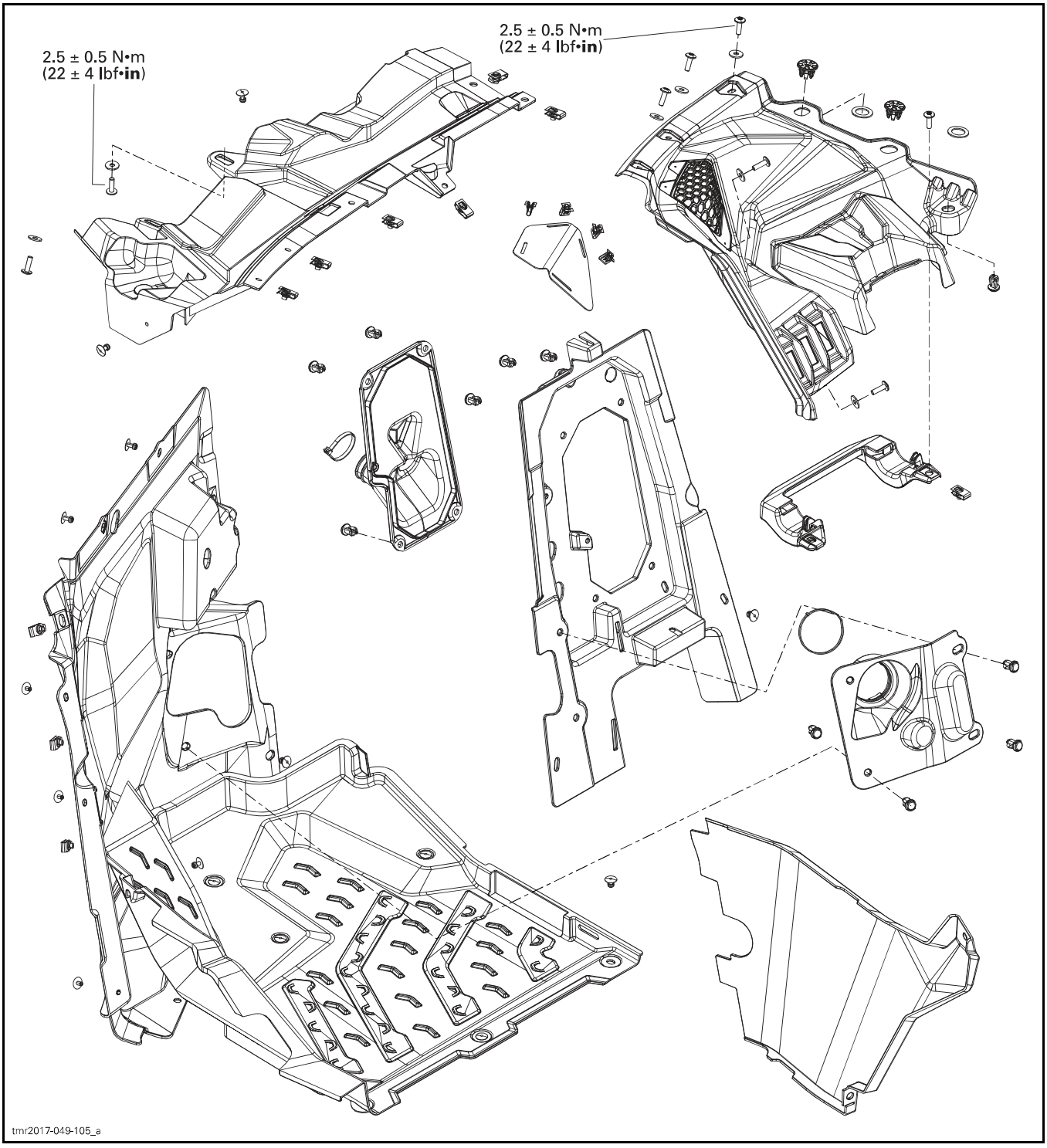

FRONT RH BULKHEAD AND DASHBOARD

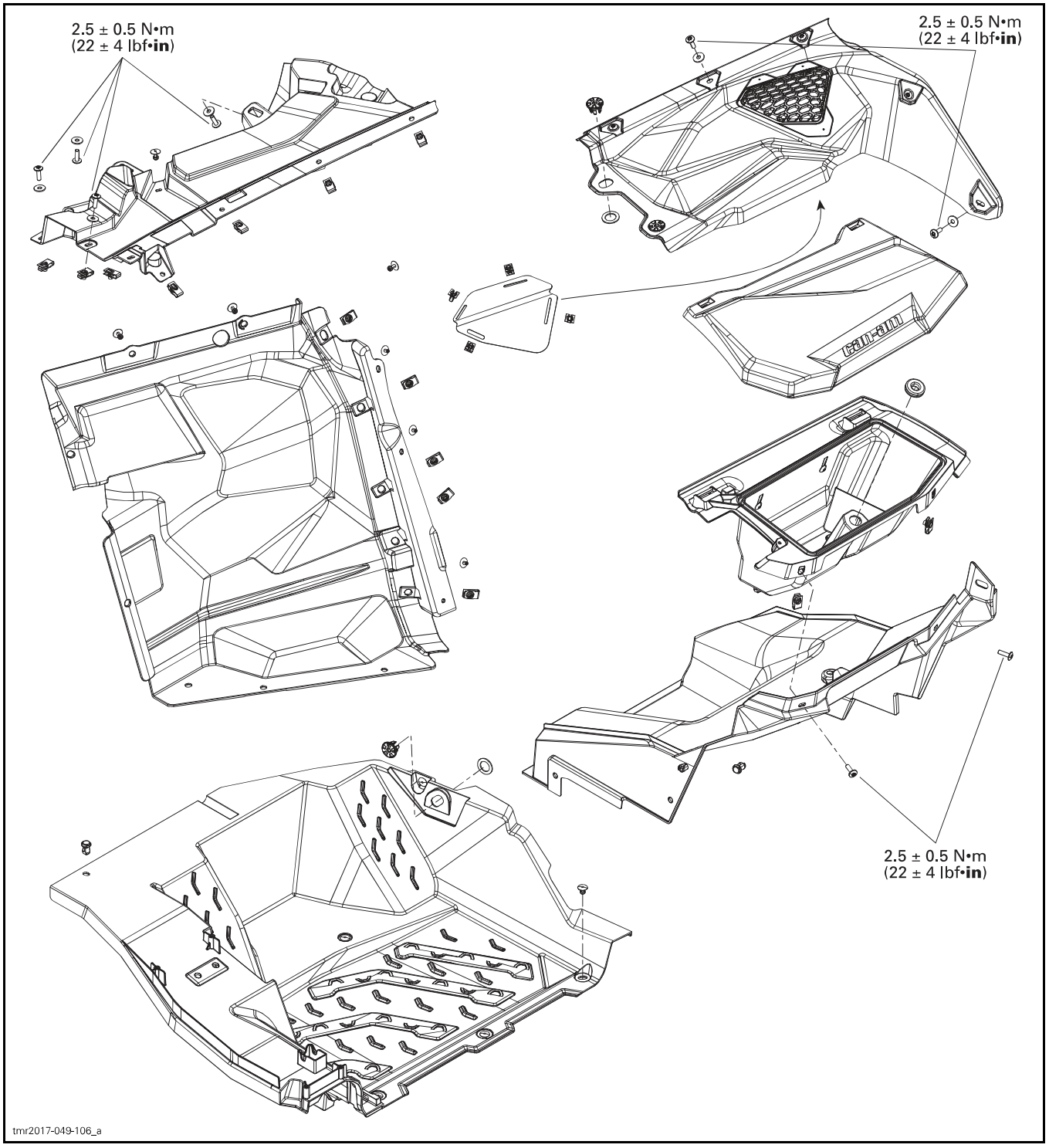

Midwest Manuals
Green Manuals
Paperless Manuals
For a Better Tomorrow
If you bought this manual from any other seller please leave them
NEGATIVE feedback and notify me at bestshopmanuals@gmail.com

SEATS

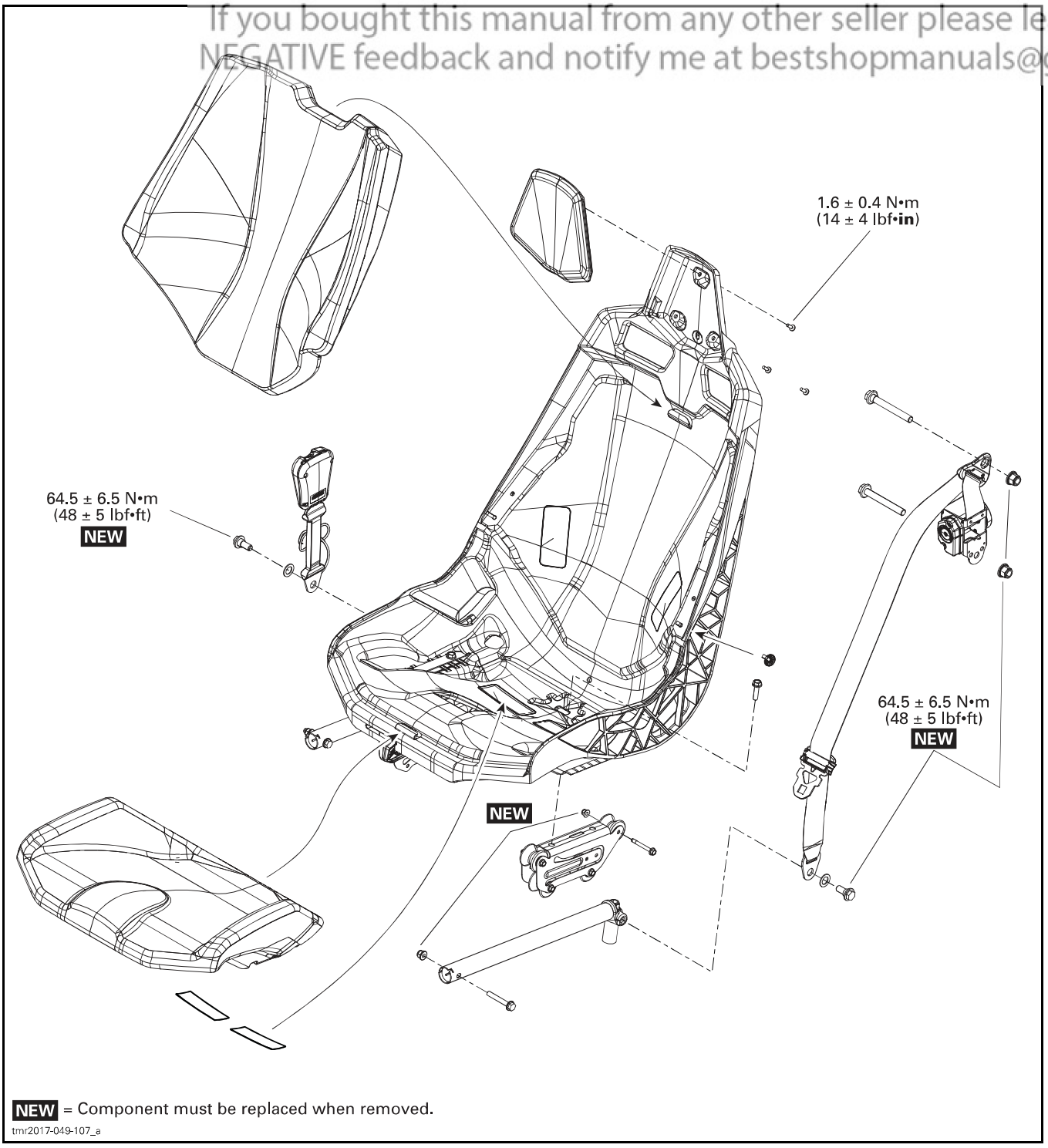

NEW = Component must be replaced when removed.

tmr2017-049-107_a

PROCEDURES

DECALS

Removing the Decal

Using a heat gun warm up one end of decal for a few seconds until decal can roll off when rubbing with your finger.

Pull decal slowly and when necessary apply more heat to ease removal on the area that has to be peeled off.

If decal tears while pulling off, it has to be heated for a few seconds longer. If decal tends to stretch while pulling off, stop heating and wait a few seconds to let it cool, then peel it off.

Installing the Decal

Using isopropyl alcohol, clean the surface and dry thoroughly.

Apply liquid soap to new decal and carefully position it. Using a sponge or a squeegee, remove the air bubbles and surplus water working from the center toward the edges. Allow to air dry.

NOTICE **Do not apply isopropyl alcohol or solvent directly on decals. Use these products in a well ventilated area.**

SEAT

Removing and Installing the Seat

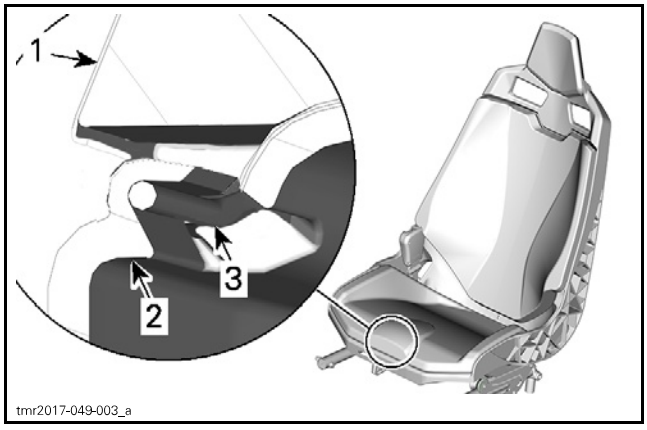

SEAT CROSS CUT
1. *Seat cushion*
2. *Seat frame*
3. *Cushion wire frame*

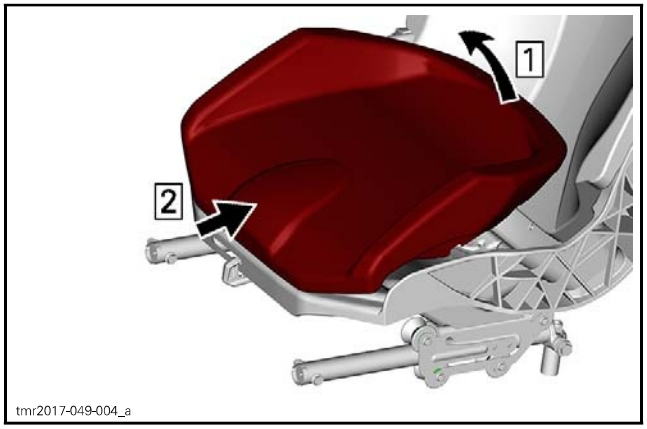

The installation is the reverse of the removal procedure.

Removing and Installing the Backrest

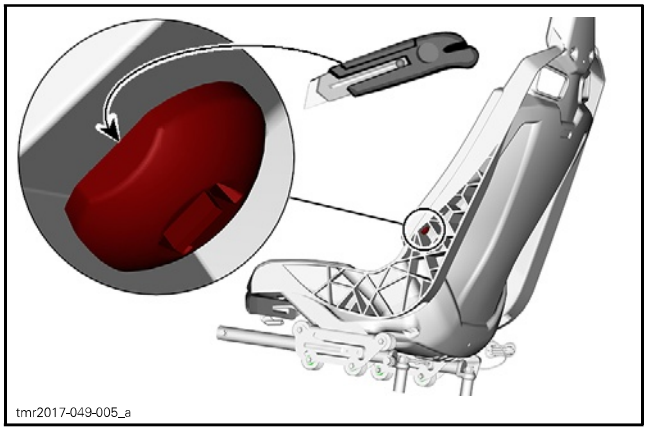

BUTTON LOCKING TIE

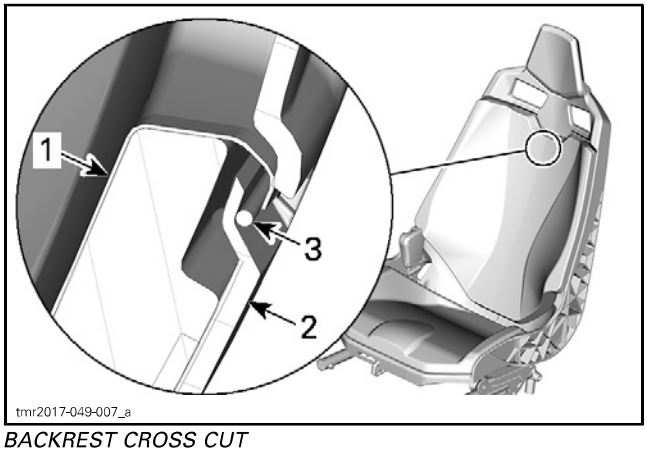

BACKREST CROSS CUT
1. *Backrest cushion*
2. *Seat frame*
3. *Cushion wire frame*

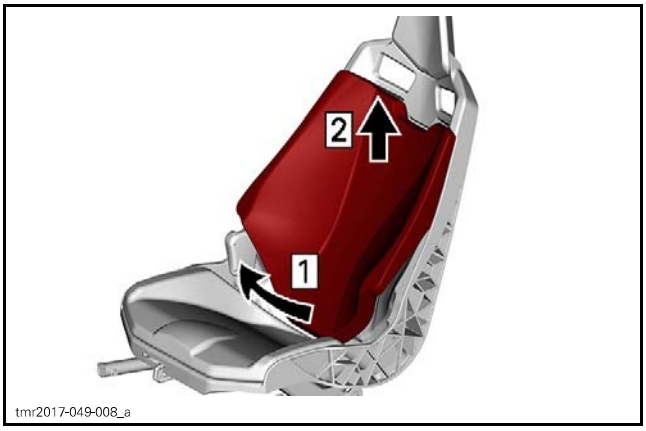

To Install the backrest, hook it to the seat frame.

Pass the locking tie through the seat base, around the cushion wire frame, and back through the button head.

Tie, and cut the excess.

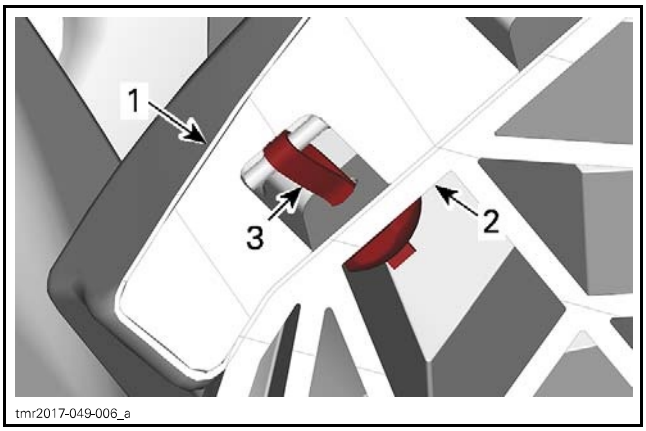

BACKREST CROSS CUT
1. *Backrest cushion*
2. *Seat frame*
3. *Button locking tie*

FRONT BODY MODULE

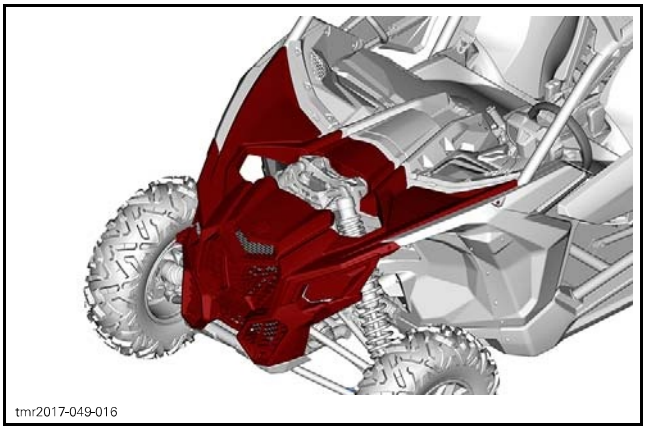

Removing the Front Body Module

It is faster to remove front body panels and grille as an assembly when servicing is required on the radiator.

Remove the following parts and fasteners.

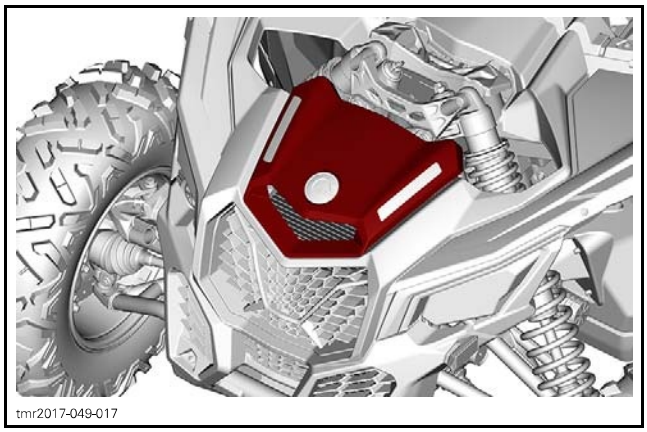

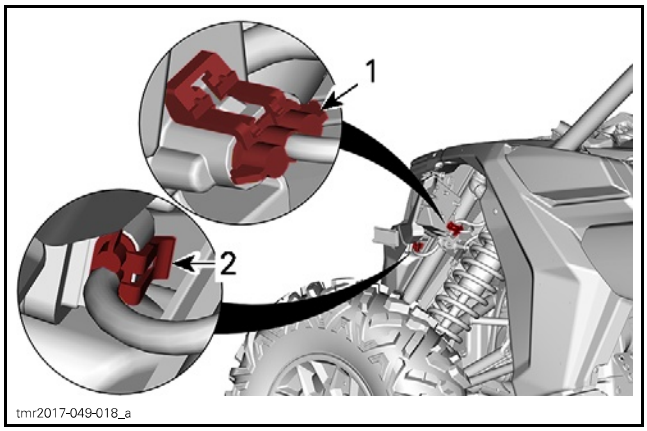

1. *Headlight connector*
2. *LED signature light connector*

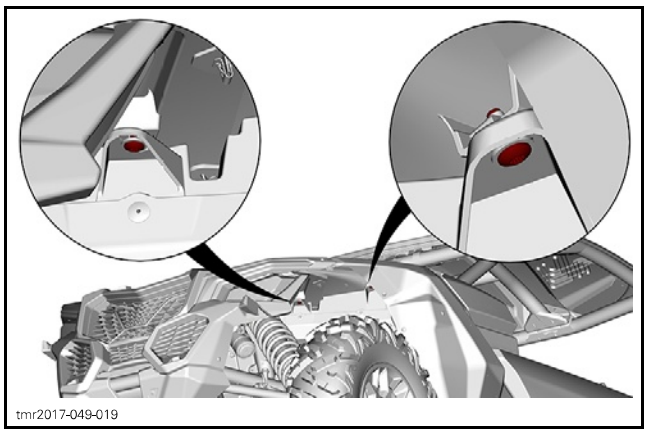

UNDER THE FENDER

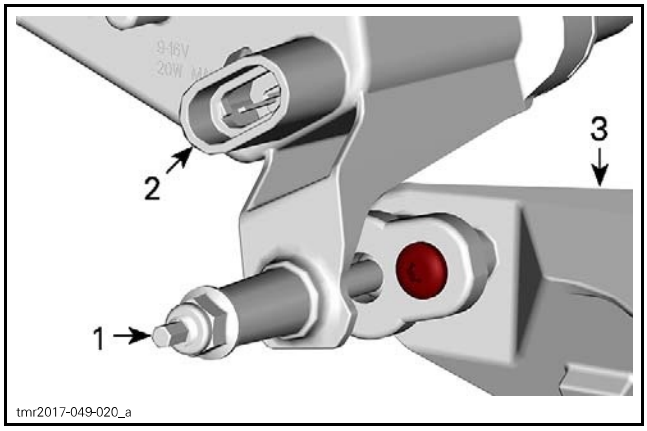

1. *Headlight lower adjustment screw*
2. *Headlight connector flange*
3. *Radiator fan support*

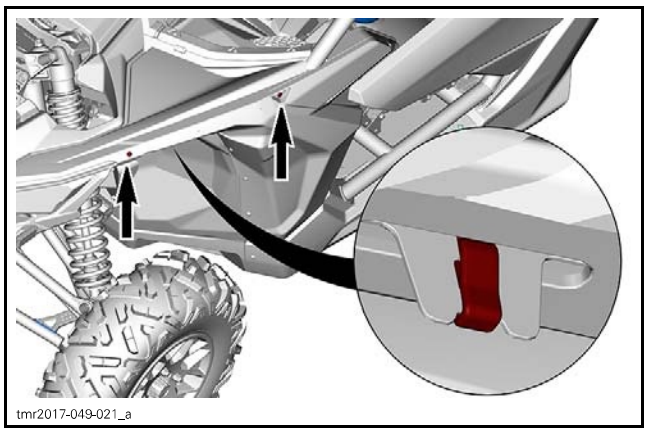

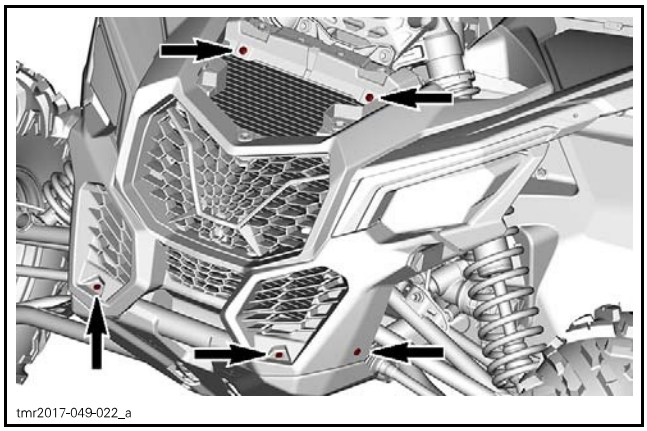

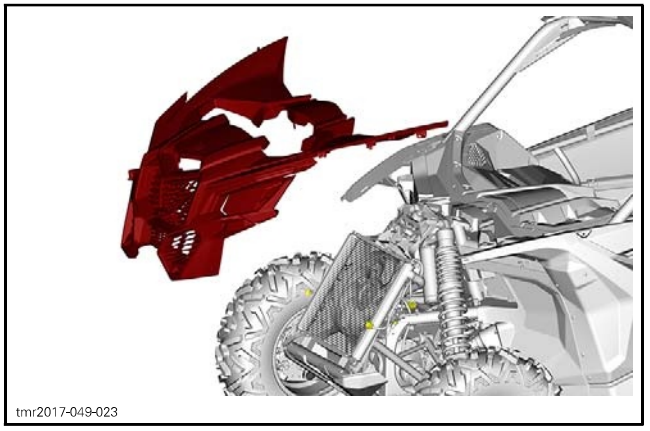

Installing the Front Body Module

The installation is the reverse of the removal procedure. However, pay attention to the following.

Refer to the exploded views for appropriate tightening torques.

REAR BODY MODULE

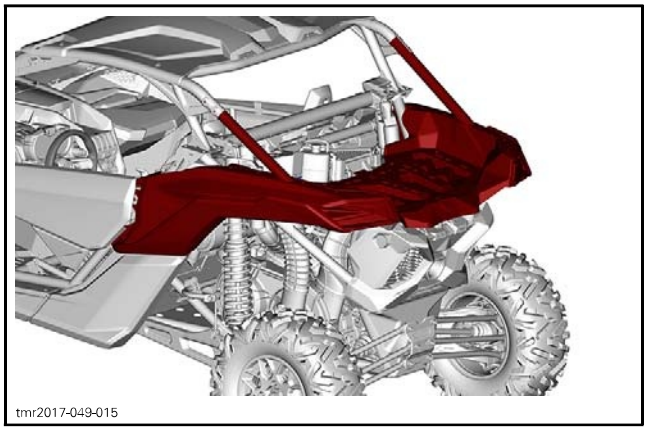

Removing the Rear Body Module

It is faster to remove rear body panels and rack as an assembly when servicing is required on the engine / transmission package.

Remove the following parts and fasteners.

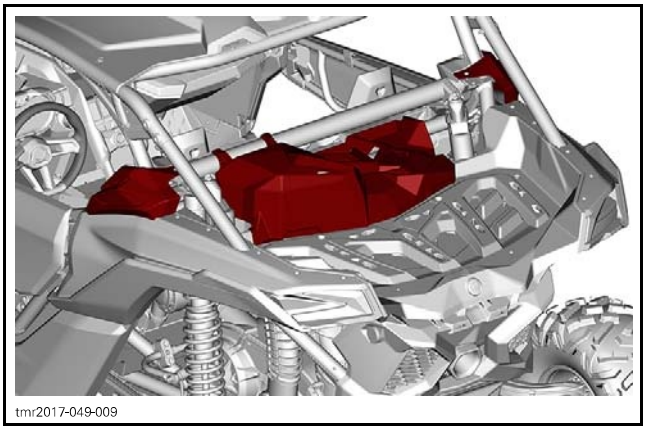
tmr2017-049-009

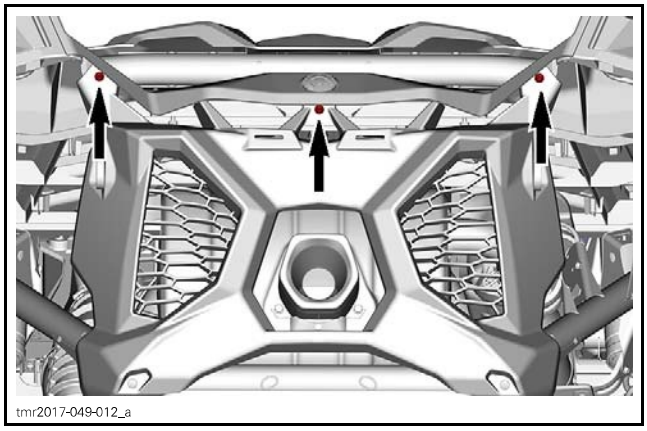
tmr2017-049-012_a

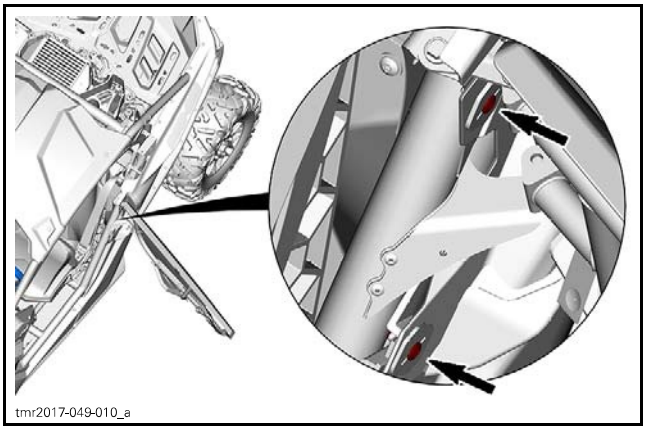
tmr2017-049-010_a

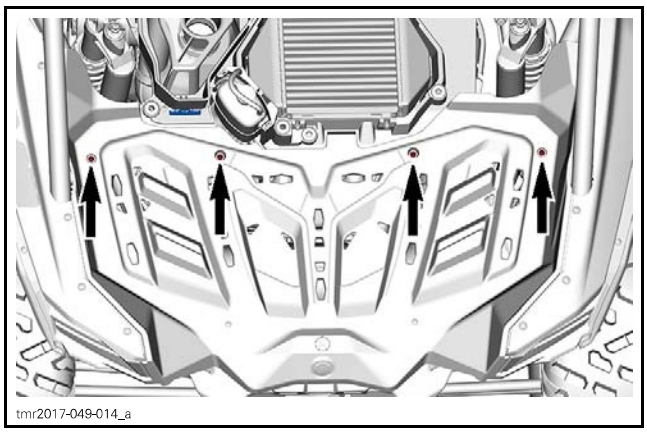
tmr2017-049-014_a

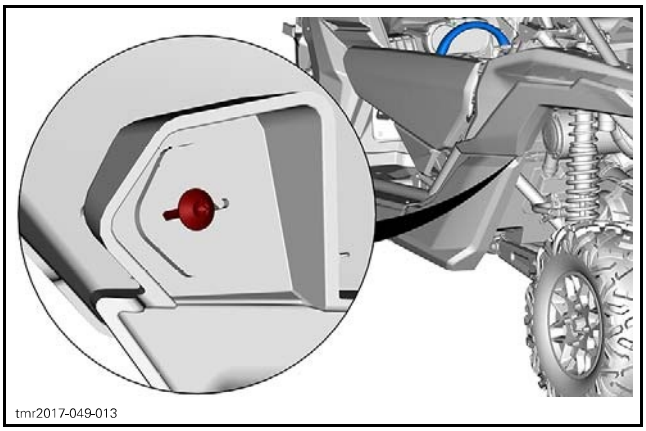
tmr2017-049-013

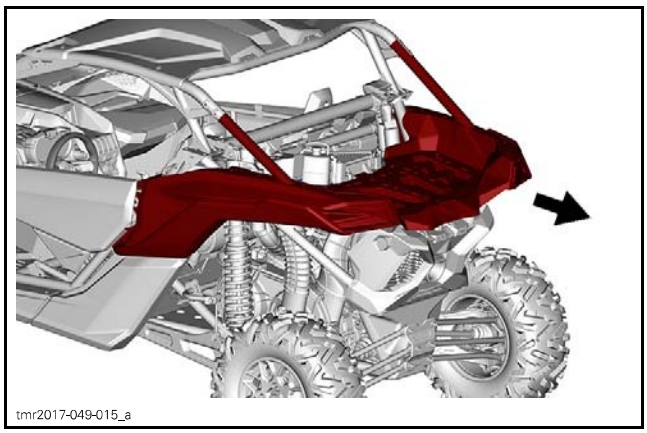
tmr2017-049-015_a

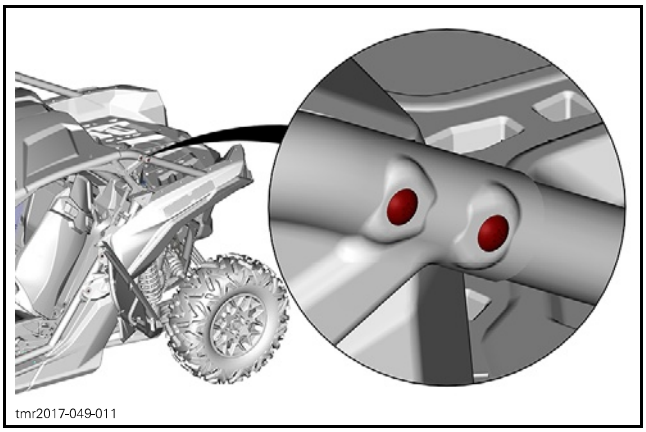
tmr2017-049-011

Installing the Rear Body Module

The installation is the reverse of the removal procedure. However, pay attention to the following.

Refer to the exploded views for appropriate tightening torques.

FRAME

SERVICE TOOLS – OTHER SUPPLIER

Description	Part Number	Page
BLIND THREADED INSERT INSTALLER	model 9600	5

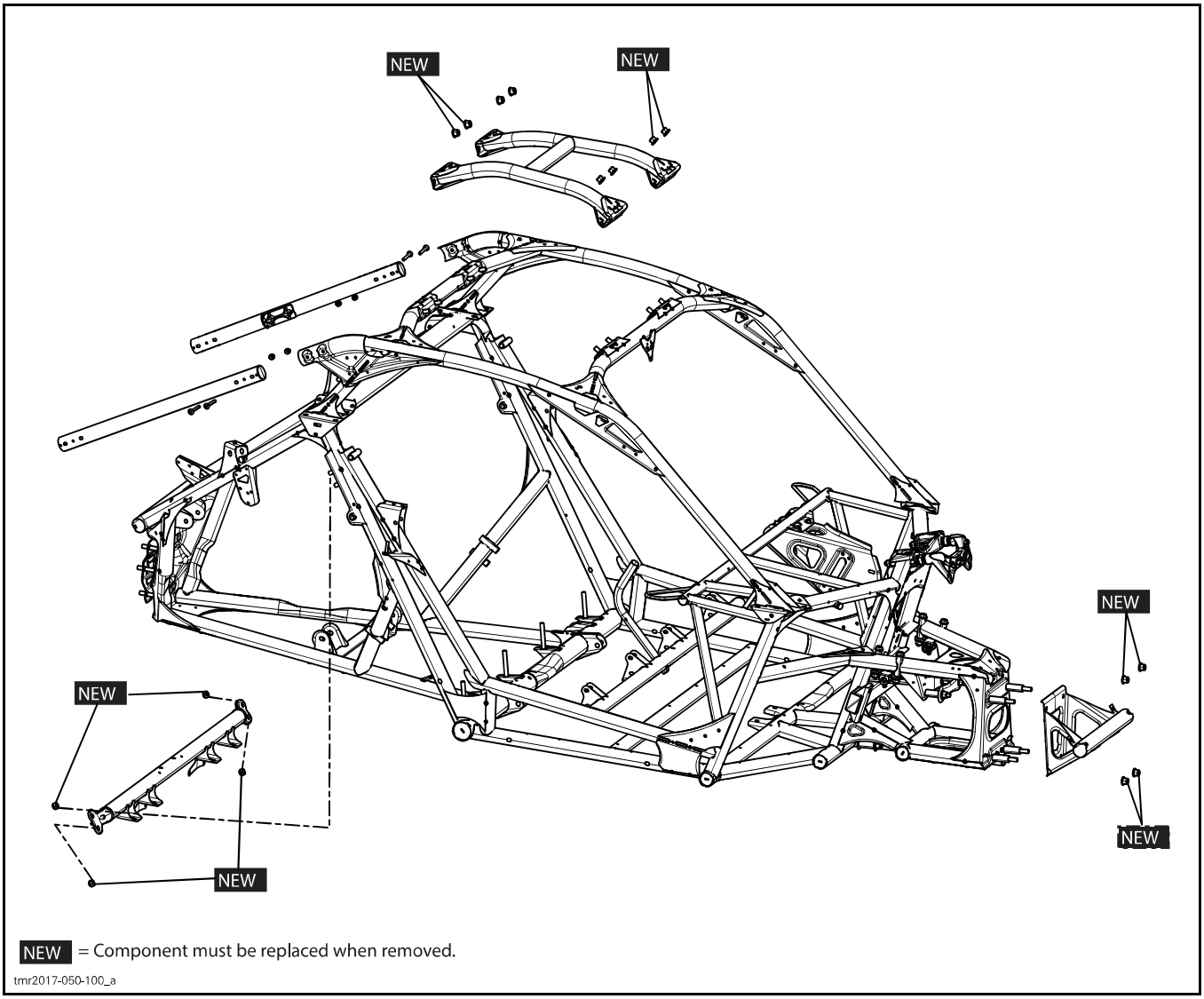

GENERAL

A replacement cage is available separately for servicing. However, the replacement frame comes with the cage already installed.

Before replacing the cage, make sure the frame is serviceable. A throughout inspection is recommended.

Check for bending, cracks, weld damages or any other damage, especially where body panels covers the frame.

Remove body panels if necessary.

PROCEDURES

CAGE

⚠ WARNING

Never modify the mounting points of the seat belts. If they are found modified or damaged, contact a BRP service representative.

⚠ WARNING

Never drill holes, weld or modify the cage. Since this is an important protection component, any modification might compromise passenger safety.

Inspecting the Cage

Check cage for bending, cracks, weld damages or any other damage.

⚠ WARNING

Any damaged cage components must be replaced.

Removing the cage

1. Remove rear body module, refer to *BODY* subsection.

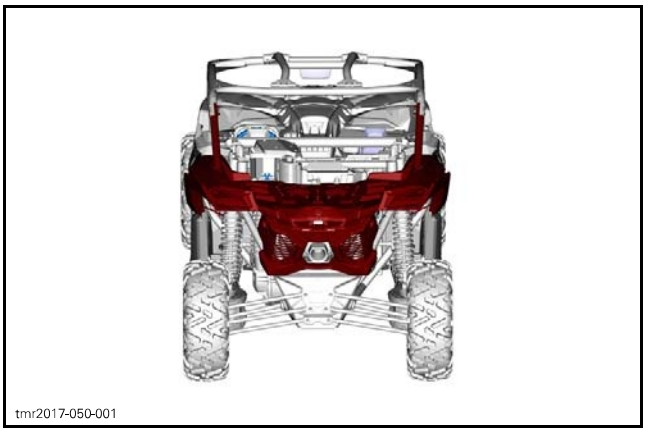
tmr2017-050-001

2. Remove service cover.

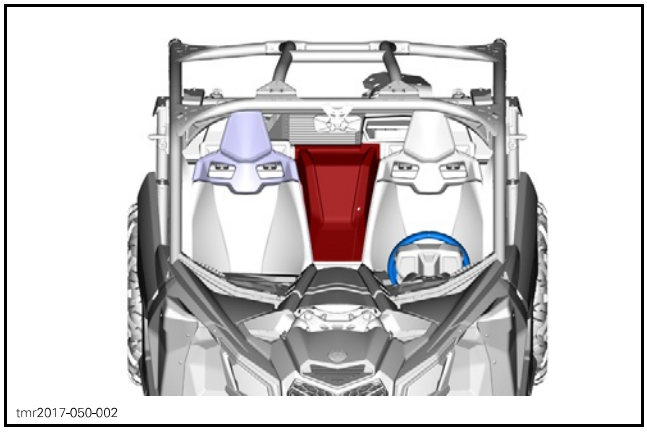
tmr2017-050-002

3. Remove seats, refer to *BODY* subsection.
4. Remove both rear bulkhead panels.

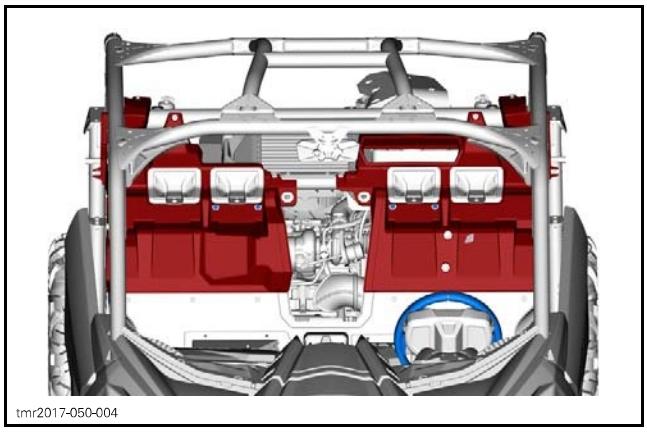
tmr2017-050-004

5. Remove front body module, refer to *BODY* subsection.

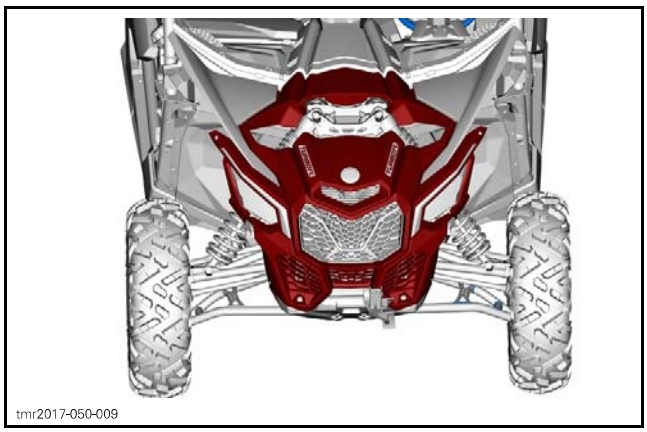
tmr2017-050-009

6. Remove side panels



tmr2017-050-005

7. Remove dashboards.

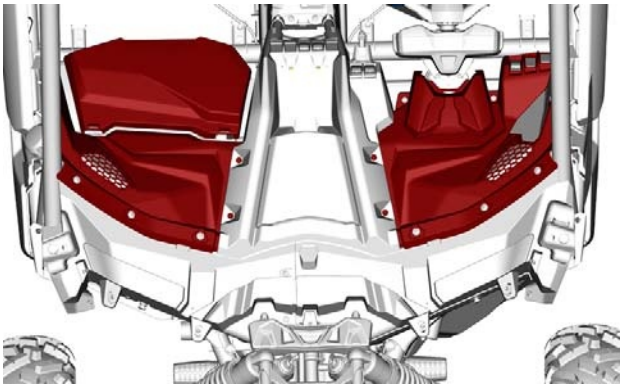
tmr2017-050-006

8. Remove dashboard deflector.

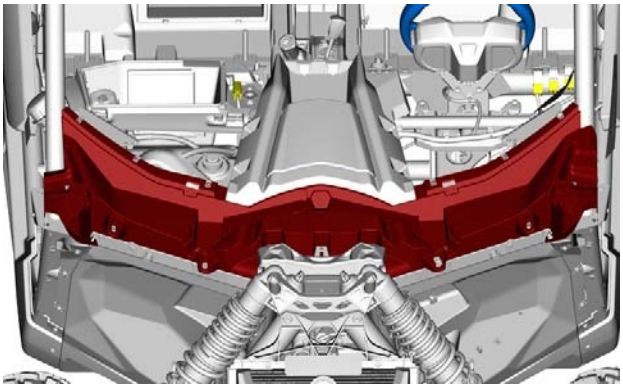
tmr2017-050-007

9. Tie the cage to a hoist to prevent it from falling off when cutting.
10. Remove the center reinforcement.
11. Using a reciprocating saw, cut cage at mounting points, just above the welds.
12. Put protective blankets on body to prevent damage.


tmr2017-050-018

CUTTING HEIGHT
2 mm to 4 mm (.079 in to .157 in)


tmr2017-050-012

⚠ WARNING

Always follow manufacturer guidelines when using power tools. Use adequate face, ears and hand protection. Serious injury may results from inadequate usage.

13. Remove excess welding material and residue from mounting points.


tmr2017-050-014

⚠ WARNING

Always follow manufacturer guidelines when using power tools. Use adequate face, ears and hand protection. Serious injury may results from inadequate usage.

14. Use a buffer to get a smooth finish surface.


tmr2017-050-013

SMOOTH SURFACE

15. Apply rustproof paint to mounting area and let dry.


tmr2017-050-016

Installing the Cage

1. Carefully lower the new cage on frame.
2. Install the supplied mounting screws and nuts in holes and tight slightly.
3. Align mounting points.


tmr2017-050-019

4. tighten nuts to specification.

TIGHTENING TORQUE	
M12 cage screws	107.5 N•m ± 17.5 N•m (79 lbf•ft ± 13 lbf•ft)

5. Reinstall all removed parts.

FRAME

Inspecting the Frame

Check frame for bending, cracks, weld damages or any other damage. Replace frame as necessary.

Frame Welding

No welding should be done on frame except if mentioned or required on an approved BRP Bulletin.

Replacing the Frame Insert

To install a new blind threaded insert, use the following tool: BLIND THREADED INSERT INSTALLER (P/N MODEL 9600) from Textron. See their web site at: **www.textronfasteningsystems.com**.

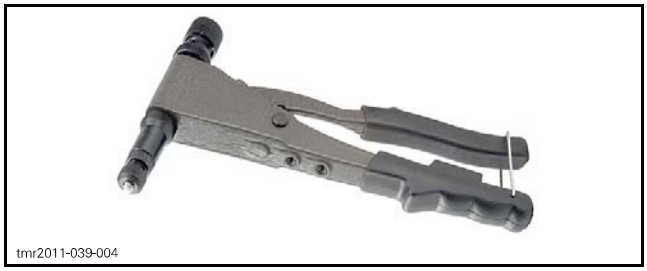
tmr2011-039-004

After insert installation, ensure insert can hold the torque applied to the screw it retains. Otherwise, install a new insert.

Replacing the Frame

NOTE: Blind threaded inserts are not installed on replacement frames. Make sure to order 11 inserts when replacing frame.

ENGINE

ENGINE			
Engine type			ROTAX® 900 ACE Turbo R 4-stroke, Double Over Head Camshaft (DOHC), dry sump,liquid cooled
Number of cylinders			3
Number of valves			12 valves (self adjusting hydraulic valve lifters)
Bore			74 mm (2.91 in)
Stroke			69.7 mm (2.74 in)
Displacement			899.31 cm³ (54.88 in³)
Compression ratio			9.2 ± 0.3
Maximum HP RPM			7500 RPM
Exhaust system			Spark arrester approved by USDA Forest Service
Air filter			Donaldson Airbox (high efficiency paper filter)
Intake valve opening			5° ATDC
Intake valve closing			25° ABDC
Exhaust valve opening			40° BBDC
Exhaust valve closing			5° BTDC
Valve stem diameter	Intake	New	4.958 mm to 4.972 mm (.1952 in to .1957 in)
		Service limit	4.940 mm (.1945 in)
	Exhaust	New	4.956 mm to 4.970 mm (.1951 in to .1957 in)
		Service limit	4.940 mm (.1945 in)
Valve out of round		New	0.005 mm (.0002 in)
		Service limit	0.060 mm (.0024 in)
Valve guide diameter		New	5.000 mm to 5.012 mm (.1969 in to .1973 in)
		Service limit	5.050 mm (.1988 in)
Valve spring free length		New	31.35 mm (1.2343 in)
		Service limit	29.50 mm (1.1614 in)
Valve seat contact width	Intake	New	1.05 mm to 1.35 mm (.041 in to .053 in)
		Service limit	1.70 mm (.067 in)
	Exhaust	New	1.25 mm to 1.45 mm (.049 in to .057 in)
		Service limit	1.80 mm (.071 in)
Cylinder head warpage		Service limit	0.15 mm (.0059 in)

ENGINE			
Piston diameter		New	73.950 mm to 73.966 mm (2.9114 in to 2.912 in)
		Service limit	73.920 mm (2.9102 in)
Piston/cylinder clearance		New	0.037 mm to 0.067 mm (.0015 in to .0026 in)
		Service limit	0.080 mm (.0031 in)
Piston ring type		1st	Upper compression ring, rectangular
		2nd	Lower compression ring, tapered face
		3rd	Oil scraper ring
Ring end gap	Rectangular	New	0.20 mm to 0.35 mm (.008 in to .014 in)
	Tapered face		0.30 mm to 0.50 mm (.012 in to .02 in)
	Oil scraper ring		0.20 mm to 0.70 mm (.008 in to .028 in)
	Rectangular	Service limit	1.20 mm (.047 in)
	Tapered face		1.20 mm (.047 in)
	Oil scraper ring		1.20 mm (.047 in)
Ring/piston groove clearance	Rectangular	New	0.030 mm to 0.066 mm (.0012 in to .0026 in)
	Tapered face		0.020 mm to 0.056 mm (.0008 in to .0022 in)
	Oil scraper ring		0.010 mm to 0.040 mm (.0004 in to .0016 in)
	Rectangular	Service limit	0.120 mm (.0047 in)
	Tapered face		0.120 mm (.0047 in)
	Oil scraper ring		0.150 mm (.0059 in)
Cylinder bore		New	74.003 mm to 74.017 mm (2.9135 in to 2.9141 in)
Cylinder taper		Maximum New	0.030 mm (.0012 in)
		Service limit	0.050 mm (.002 in)
Cylinder out of round		Maximum New	0.008 mm (.0003 in)
		Service limit	0.030 mm (.0012 in)
Camshaft bearing journal diameter	PTO	New	25.967 mm to 25.980 mm (1.0223 in to 1.0228 in)
		Service limit	25.940 mm (1.0213 in)
	MAG/Center	New	22.957 mm to 22.970 mm (.9038 in to .9043 in)
		Service limit	22.930 mm (.9028 in)

ENGINE			
Camshaft holder bore diameter	PTO	New	26.000 mm to 26.021 mm (1.024 in to 1.024 in)
		Service limit	26.050 mm (1.026 in)
	MAG/Center	New	23.000 mm to 23.021 mm (.906 in to .906 in)
		Service limit	23.050 mm (.907 in)
Camshaft journal radial clearance	All	New	0.020 mm to 0.054 mm (.001 in to .002 in)
		Service limit	0.080 mm (.003 in)
Camshaft lobe height	Intake and Exhaust valve	New	38.35 mm to 38.55 mm (1.51 in to 1.518 in)
		Service limit	38.33 mm (1.509 in)
Hydraulic valve lifter diameter		New	28.354 mm to 28.370 mm (1.1163 in to 1.1169 in)
		Service limit	28.340 mm (1.1157 in)
Hydraulic valve lifter radial clearance		Service limit	0.100 mm (.0039 in)
Crankshaft bearing journal diameter		New	35.990 mm to 36.006 mm (1.4169 in to 1.4176 in)
		Service limit	35.960 mm (1.4157 in)
Crankshaft radial play		Service limit	0.08 mm (.0031 in)
Crankshaft axial play		New	0.120 mm to 0.352 mm (.005 in to .014 in)
		Service limit	0.450 mm (.018 in)
Crankshaft pin diameter		New	35.979 mm to 35.995 mm (1.4165 in to 1.4171 in)
		Service limit	35.969 mm (1.4161 in)
Crankshaft deflection	MAG	Maximum	0.050 mm (.002 in)
	Center		0.050 mm (.002 in)
	PTO		0.050 mm (.002 in)
Crankshaft plain bearing inner diameter		Service limit	36.080 mm (1.4205 in)
Connecting rod big end diameter		Service limit	36.06 mm (1.4197 in)
Connecting rod big end radial play		Service limit	0.08 mm (.0031 in)
Connecting rod big end axial play		New	0.100 mm to 0.352 mm (.004 in to .014 in)
		Service limit	0.450 mm (.018 in)
Connecting rod small end diameter		New	17.010 mm to 17.020 mm (.6697 in to .6701 in)
		Service limit	17.060 mm (.6717 in)
Piston pin diameter		New	16.996 mm to 17.00 mm (.6691 in to .6693 in)
		Service limit	16.986 mm (.6687 in)

ENGINE		
Connecting rod small end radial clearance	Service limit	0.040 mm (.0016 in)
Chain guide groove depth	Service limit	1 mm (.039 in)
Oil pressure regulator spring free length	New	46 mm (1.811 in)
	Service limit	45 mm (1.772 in)
Oil pump radial clearance	Service limit	0.25 mm (.0098 in)
Oil pump axial clearance	Service limit	0.15 mm (.0059 in)

LUBRICATION SYSTEM			
Type			Wet sump
Oil filter			Replaceable cartridge oil filter
Minimum engine oil pressure at 100°C (212°F)		At idle	80 kPa (11.6 PSI)
		At 4000 RPM	270 kPa (39.16 PSI)
		Between 6000 to 7250 RPM	350 kPa (50.76 PSI)
Engine oil	Capacity	Engine oil and engine oil filter replacement	3.5 L (3.7 qt (U.S. liq.))
	Recommended		For the summer season, use XPS synthetic blend oil (summer grade) (P/N 293 600 121). For the winter season, use XPS synthetic oil (all climate) (P/N 293 600 112). If not available, use a 5W 40 motor oil that meets the requirements for API service classification SG, SH or SJ

COOLING SYSTEM		
Coolant	Type	Ethyl glycol/water mix (50%/50%). Use premixed coolant sold by BRP (LONG LIFE ANTIFREEZE) (P/N 219 702 685) or coolant specifically designed for aluminum engines
Thermostat	Starts to open	65°C (149°F)
	Fully open	88°C (190°F)

TURBO CHARGER		
Rotor Shaft Bearing Leakage Test	Service limit	50%
Rotor Radial Clearance	Service limit	Minimum of 0.1 mm (.004 in)
Movement of Waste Gate Actuator Rod		At 43 kPa (6.24 PSI) air pressure -. 1 mm ± 0.5 mm (.039 in ± .02 in) movement
Turbine Flange Warpage	Service limit	Maximum of 0.1 mm (.004 in)

TRANSMISSION		
Type		Quick Response System (QRS) CVT (Continuously Variable Transmission)
Engagement RPM		1650 ± 100 RPM
Drive belt width	Service limit	30.00 mm (1.181 in)
Governor cup roller flat spot width	Service limit	8.50 mm (.335 in)
Governor cup roller inner diameter	New	8.025 mm to 8.175 mm (.3159 in to .3219 in)
	Service limit	9.000 mm (.3543 in)
Centrifugal lever pivot bolt diameter	New	6.063 mm to 6.091 mm (.2387 in to .2398 in)
	Service limit	6.000 mm (.2362 in)
Centrifugal lever bore diameter	New	6.000 mm to 6.120 mm (.236 in to .241 in)
	Service limit	6.200 mm (.244 in)
Drive pulley sliding half centrifugal lever pivot bolt bore diameter	New	6.113 mm to 6.171 mm (.241 in to .243 in)
	Service limit	6.300 mm (.248 in)
Drive pulley sliding half large bushing	New	46.950 mm to 47.130 mm (1.848 in to 1.856 in)
	Service limit	47.160 mm (1.857 in)
Drive pulley sliding half small bushing	New	32.010 mm to 32.135 mm (1.26 in to 1.265 in)
	Service limit	32.200 mm (1.268 in)
Cam bushing inner diameter	New	41.278 mm to 41.363 mm (1.625 in to 1.628 in)
	Service limit	41.420 mm (1.631 in)
Driven pulley sliding half bushing	New	41.278 mm to 41.363 mm (1.625 in to 1.628 in)
	Service limit	41.420 mm (1.631 in)
Driven pulley roller inner diameter	Service limit	8.5 mm (.335 in)
Driven pulley roller outer diameter	Service limit	21.5 mm (.846 in)
Driven pulley roller thickness	Service limit	14.75 mm (.581 in)

GEARBOX			
Type			Dual range (HI-LO) with park, neutral and reverse
Gearbox oil	Capacity	Oil replacement	1.25 L (42.27 U.S. oz)
		Internal repair or new unit	1.5 L (1.59 qt (U.S. liq.))
	Recommended		XPS synthetic gear oil 75W140 (P/N 293 600 140) or a 75W140 API GL-5 synthetic gear oil

GEARBOX			
Gear ratios		Angle drive sub-transmission	20/21 = 0.952
		Intermediate 1	40/21 = 1.905
		Intermediate 2	37/26 = 1.423
		High	38/36 = 1.056
		Low	39/15 = 2.600
		Reverse	39/17 = 2.294
		Final drive (fixed gear)	48/14 = 3.429
Overall gear ratios		High	9.810
		Low	24.163
		Reverse	21.321
Coupling sleeve groove width		New	5.25 mm to 5.35 mm (.207 in to .211 in)
		Service limit	5.50 mm (.217 in)
Coupling fork claw thickness		New	4.95 mm to 5.05 mm (.195 in to .199 in)
		Service limit	4.80 mm (.189 in)
Shift fork claw thickness (high, low and reverse gear shift fork)		New	5.10 mm to 5.20 mm (.201 in to .205 in)
		Service limit	5.00 mm (.197 in)
Width of shift fork engagement groove		New	5.30 mm to 5.40 mm (.209 in to .213 in)
		Service limit	5.50 mm (.217 in)
Intermediate gear bearing pin outer diameter		New	24.987 mm to 25.000 mm (.9837 in to .9843 in)
		Service limit	24.977 mm (.9833 in)
Countershaft	MAG side	New	19.977 mm to 19.990 mm (.7865 in to .787 in)
		Service limit	19.973 mm (.7863 in)
	CVT side	New	24.977 mm to 24.990 mm (.9833 in to .9839 in)
		Service limit	24.970 mm (.9831 in)
Main shaft	Bearing journal MAG/CVT side	New	16.980 mm to 16.991 mm (.6685 in to .6689 in)
		Service limit	16.976 mm (.6683 in)

ELECTRICAL SYSTEM	
Magneto generator output	644 W @ 6000 RPM
Ignition system type	IDI (Inductive Discharge Ignition)
Ignition timing	Not adjustable

ELECTRICAL SYSTEM		
Spark plug	Quantity	3
	Make and type	NGK LMAR9AI-8
	Gap	0.7 mm to 0.8 mm (.028 in to .031 in)
Engine RPM limiter setting	Forward	8300 RPM
	Reverse	20 km/h to 25 km/h (12 MPH to 16 MPH) (8300 RPM with Override)

FUEL SYSTEM		
Fuel delivery	Type	Electronic Fuel Injection (EFI) with iTC (Intelligent Throttle Control), 1 injector per cylinder
Throttle body		46 mm with ETA
Idle speed		1250 RPM ± 50 (not adjustable)

VEHICLE

COOLING SYSTEM		
Coolant	Type	Ethyl glycol/water mix (50%/50%). Use premixed coolant sold by BRP (LONG LIFE ANTIFREEZE) (P/N 219 702 685) or coolant specifically designed for aluminum engines
	Capacity	4.3 L (1.8 U.S. gal.)
Cooling fan activation	Comes ON	95°C (203°F)
	Goes OFF	92°C (198°F)
Radiator cap opening pressure		110 kPa (16 PSI)

ELECTRICAL SYSTEM			
Battery	Type		Maintenance free SLA
	Voltage		12 volts
	Nominal rating		18 A•h
	Power starter output		1.34 kW
Headlight			2 x 20W LED
Taillight			2 x 3W LED
Signature lights			2 x 2W LED
Fusible links	Main		16 AWG
	Main accessories		16 AWG
Fuses in FB1	Gauge Relay	F4	10 A
	Ignition coils Fuel injectors Fuel pump	F5	10 A
	Engine control module (ECM)	F6	10 A
	4WD actuator	F7	10 A
	D.E.S.S.	F8	10 A
	Cooling fan motor	F9	25 A
	Lights	F11	10 A
	Connectors (DC3) 12 V power outlet##	F12	20 A
	Accessories	F14	30 A
	Tail lights	F16	10 A
	Intercooler fan	F17	20 A
Fuse in FB2	DPS power		40 A

FUEL SYSTEM			
Fuel pump		Type	Electrical (in fuel tank)
		Operating pressure	400 kPa ± 14 kPa (58.02 PSI ± 2.03 PSI)
Fuel	Type		Premium unleaded gasoline
	Minimum Octane rating	North America	87 (R+M)/2
		Outside North America	92 RON
	Recommended Octane rating	North America	91 (R+M)/2
		Outside North America	95 RON
Fuel tank capacity			± 40 L (10.6 U.S. gal.)
Fuel remaining when low fuel light turns ON			± 12 L (3.2 U.S. gal.)

DRIVE SYSTEM		
Front drive		Selectable 2WD / 4WD with Visco-Lok auto-locking front differential, spiral gears
Front drive ratio		3.6:1
Rear drive		Angle drive/spiral bevel gears
Rear drive ratio		3.43:1
Front differential oil	Capacity	400 ml (14 U.S. oz)
	Recommended	XPS synthetic gear oil (75W 90 API GL-5) (P/N 293 600 043)or synthetic gear oil 75W90 API GL-5
CV joint grease		CV joint grease (P/N 293 550 062)

STEERING	
Type	Rack and pinion
Steering wheel	Adjustable tilt steering
Turning radius	528 cm (208 in)
Front toe (vehicle on ground)	0.6° ± 0.4°
Rear toe (vehicle on ground)	0° ± 0.2°

FRONT SUSPENSION		
Suspension type		Double suspension arm with stabilizer bar
Suspension travel	STD X ds	508 mm (20 in)
	X rs	559 mm (22 in)

FRONT SUSPENSION			
Shock absorber	QTY		2
	Type	STD	HPG shocks with piggyback reservoir. QS3 compression and preload adjustments
		X ds	HPG shocks with piggyback reservoir and dual speed compression and rebound adjustments
		X rs	HPG shocks with remote reservoir and bypass, dual speed compression and rebound adjustments
Spring free length (mm ± 3)	Upper spring		35 mm ± 3 mm (1.378 in ± .118 in)
	Lower spring		406.4 mm ± 3 mm (16 in ± .118 in)
Preload adjustment type			Threaded spring retainer

REAR SUSPENSION			
Suspension type			Torsional Trailing Suspension-arm Independent (TTX) with external stabilizer bar
Suspension travel		STD X ds	508 mm (20 in)
		X rs	609.6 mm (24 in)
Shock absorber	QTY		2
	Type	STD	HPG shocks with piggyback reservoir. QS3† compression and preload adjustments with bottom-out control
		X ds	HPG shocks with piggyback reservoir and dual speed compression and rebound adjustments and bottom out control
		X rs	HPG shocks with remote reservoir and dual speed compression and rebound adjustments
Spring free length	Upper spring	STD X ds	199 mm ± 3 mm (7.835 in ± .118 in)
		X rs	228.6 mm ± 3 mm (9 in ± .118 in)
	Lower spring	STD X ds	457.2 mm ± 3 mm (18 in ± .118 in)
		X rs	482.6 mm ± 3 mm (19 in ± .118 in)
Preload adjustment type			Threaded spring retainer

BRAKES		
Front brake	Qty	2
	Type	262 mm (10.3 in) ventilated brake disc with hydraulic twin-pistons calipers of 32 mm (1.26 in)
Rear brake	Qty	2
	Type	248 mm (9.8 in) ventilated brake disc with hydraulic twin-pistons calipers of 28 mm (1.1 in)
Brake fluid	Type	DOT 4
	Capacity	310 ml (10.5 U.S. oz)
Caliper		Floating
Brake pad material		Sintered high performance
Minimum brake pad thickness		0.5 mm (.02 in)
Minimum brake disc thickness		4 mm (.157 in)
Maximum brake disc warpage		0.2 mm (.01 in)

TIRES			
Pressure	Front	STD	Maximum: 159 kPa (23 PSI) Minimum: 152 kPa (22 PSI)
		X ds	Maximum: 138 kPa (20 PSI) Minimum: 131 kPa (19 PSI)
		X rs	Maximum: 124 kPa (18 PSI) Minimum: 117 kPa (17 PSI)
	Rear	STD	Maximum: 207 kPa (30 PSI) Minimum: 152 kPa (22 PSI)
		X ds	Maximum: 186 kPa (27 PSI) Minimum: 138 kPa (20 PSI)
		X rs	Maximum: 214 kPa (31 PSI) Minimum: 165 kPa (24 PSI)
Type Size	Front	STD	28 x 9 x 14 (in)
		X ds	29 x 9 x 14 (in)
		X rs	30 x 10 x 14 (in)
	Rear	STD	28 x 11 x 14 (in)
		X ds	29 x 11 x 14 (in)
		X rs	30 x 10 x 14 (in)
Minimum tire thread depth			3 mm (.118 in)

WHEELS		
Type	STD	Cast aluminum wheels
	X ds X rs	Cast aluminum beadlock wheels

WHEELS			
Rim size	Front		14 x 7"
	Rear	STD X ds	14 x 8"
		X rs	14 x 7"
Stud thread			M12 x 1.5
Wheel nuts torque			120 N•m ± 10 N•m (89 lbf•ft ± 7 lbf•ft)

CHASSIS	
Cage type	47 mm (1.85 in) diameter, high strength steel, ROPS-approved cage

DIMENSIONS			
Overall length		STD X ds	131 cm (51.6 in)
		X rs	132 cm (52 in)
Overall width		STD X ds	162.5 cm (64 in)
		X rs	182.9 cm (72 in)
Overall height		STD X ds	168 cm (66 in)
		X rs	170.2 cm (67 in)
Wheelbase			259 cm (102 in)
Wheel track	Front	STD X ds	136 cm (53.5 in)
		X rs	156.3 cm (61.5 in)
	Rear	STD X ds	133.1 cm (52.4 in)
		X rs	153.4 cm (60.4 in)
Ground clearance		STD X ds	35.6 cm (14 in)
		X rs	38.1 cm (15 in)

LOADING CAPACITY AND WEIGHT		
Dry weight	STD	666.9 kg (1,470 lb)
	X ds	675.9 kg (1,490 lb)
	X rs	718.9 kg (1,585 lb)
Weight distribution (front/rear)		45/55
Total vehicle load allowed (including driver, passenger, all other loads and added accessories)		286 kg (630 lb)

LOADING CAPACITY AND WEIGHT		
Gross vehicle weight rating	STD	982 kg (2,165 lb)
	X ds	991 kg (2,185 lb)
	X rs	1 034 kg (2,280 lb)
Cargo rack capacity		90 kg (200 lb)

WIRING DIAGRAM INFORMATION

GENERAL

WIRING DIAGRAM LOCATION

The wiring diagrams are stored in the back cover pocket.

WIRING DIAGRAM CODES

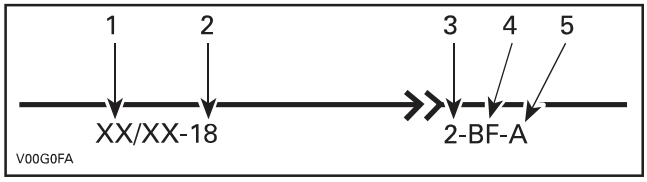

1. *Wire colors*
2. *Wire gauge*
3. *Connector housing area*
4. *Connector identification*
5. *Wire location in connector*

Wiring diagram with colored lines

The wiring diagram on the *KNOWLEDGE CENTER* is in color.

Color Definition

NOTE: To find the color of the wire on the vehicle skip to *WIRE COLORS* in this subsection.

The following colors refer to the color of the line drawn in the wiring diagram.

LINE COLOR	LINE TYPE	FUNCTION	DEFINITION
Red	Thick	Unswitched 12 V	Hot at all times
	Thin	3.3 and 5 V	Sensor reference voltage
Orange	Thick	55 - 60 V	High voltage
Blue	Thin	Analog signal	Variable voltage
Cyan	Thin	Digital signal	Pulsed or constant digital (on/off)
Pink	Thick	12V switched	Condition must be met to activate circuit
Green	Thin dotted	Communication	Data communication between modules using a protocol (CAN, LIN, & other)
Brown	Thick	Power control	Controls a circuit by providing an on/off control to activate the circuit
Yellow	Thick	AC Volts	Alternative current exiting the magneto
Black	Thick	Permanent ground	A ground that is in permanent contact
	Thin	Module (analog/digital) ground	A ground that is controlled by a module

Wire Colors

It identifies the color of a wire. When a 2-color scheme is used, the first color is the main color while the second color is the tracer color.

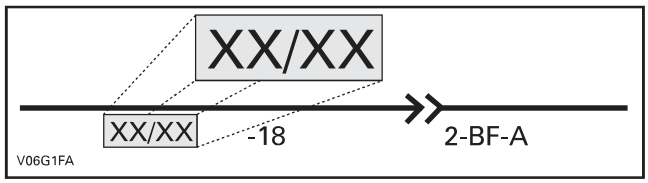

THE SHADED PART INDICATES THE WIRE COLOR

Example: YL/BK is a YELLOW wire with a BLACK stripe.

Color Codes

COLOR CODES			
CODE	COLOR	CODE	COLOR
BG	BEIGE (TAN)	OG	ORANGE
BN	BROWN	PK	PINK
BU	BLUE	RD	RED

COLOR CODES			
CODE	COLOR	CODE	COLOR
BK	BLACK	VT	VIOLET
GN	GREEN	WH	WHITE
GY	GRAY	YE	YELLOW

Wire Gauge

The number after wire color indicates the gauge of a wire.

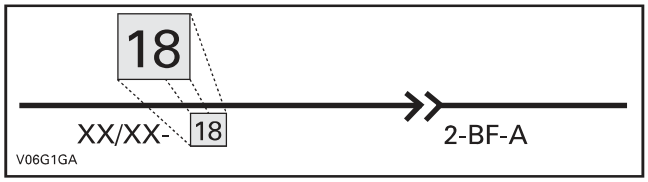

THE SHADED PART INDICATES THE WIRE GAUGE

Example: The number that follows the wire color indicates the wire size used, in this case 18 gauge wire.

Connector Identification

The letters in the middle of the connector/pin contact number Indicates the connector's function. If there are many connectors in the same area, this helps to identify which wire is in which connector.

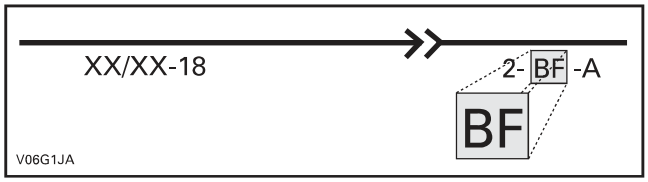

THE SHADED PART INDICATES A CONNECTOR

Wire Location in Connector

This is the wire position in the connector. The number or letter given refers to the physical identification stamped or molded on the connector.

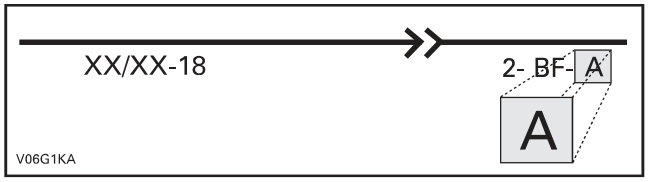

THE SHADED PART INDICATES THE CONNECTOR LOCATION IN HOUSING

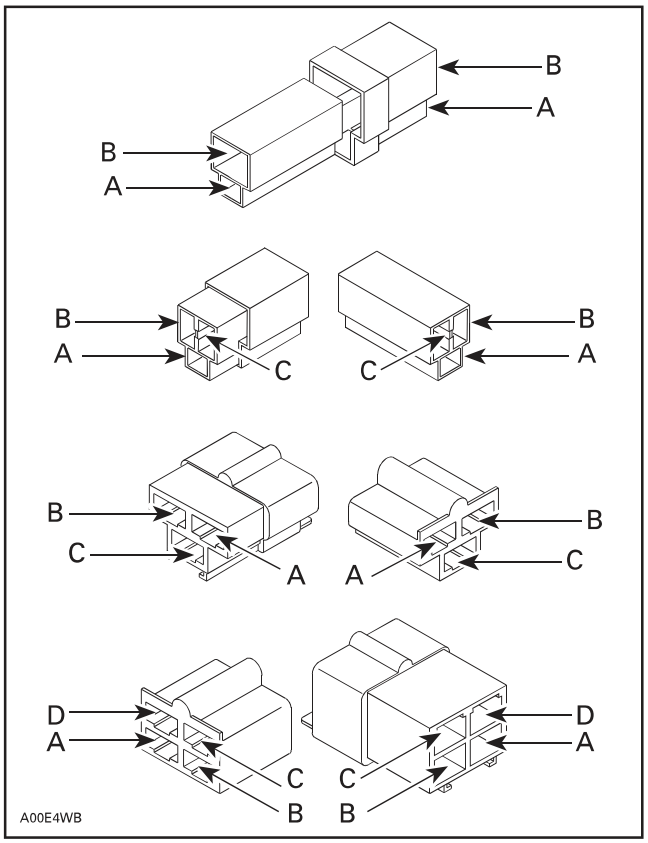

TYPICAL

Following a circuit

To follow a circuit, search the in section of the wiring diagram shown in the wiring diagram index.

In this example, the 60V comes **from** JT WH/RD in section (-B-2).

NOTE: The arrow indicates the direction of the power in the circuit.

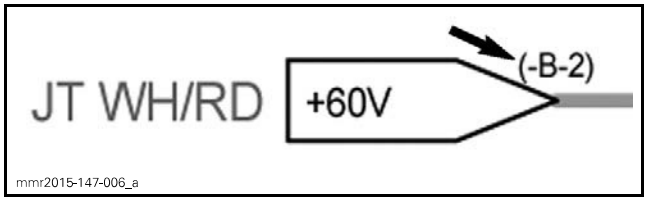

FROM JT WH/RD (-B-2)

In following example, the 60V goes **to** the IGN_M connector pin 3 in section (-B-4).

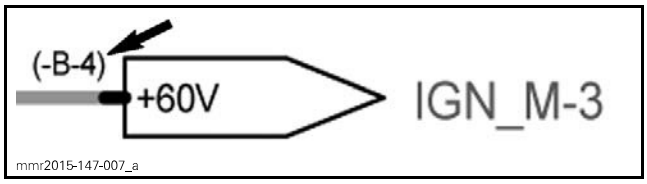

TO ING_M-3 (-B-4)

Splices in Wiring Harness

Splices in wiring harness are indicated on the wiring diagram as follows.

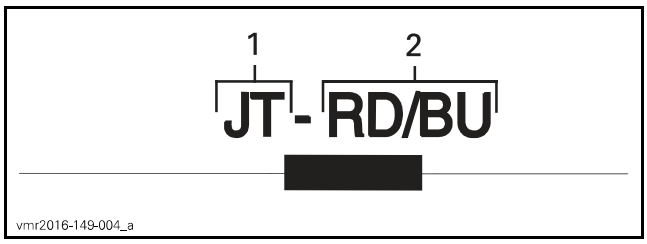

1. JT: Splice indication
2. Spliced wire color

PROCEDURES

This section gives the procedures in order to quickly repair electrical harness splices.

1. Make sure to perform the usual tests described in *ELECTRICAL SYSTEM* sections before investigating the harness splices.
2. If an electrical issue can not be found with the usual tests, locate the main harness splice that is involved in the faulty circuit and repair it as per the *SPLICES REPAIR PROCEDURE*.
3. To repair a splice, we recommend the use of a tin solder meeting the followings requirements or an equivalent.

TIN SOLDER REQUIREMENTS
SN 60
PB 40
DIA 0.062
FLUX RA 2%

SPLICES REPAIR PROCEDURE

CASE 1: Wire Detached from Splice

⚠ WARNING

Repairs described in this section should never be performed on harness sections that can be exposed to water.

1. Locate splice. Refer to splices location diagrams.
2. Remove wires from protector tube.
3. Locate the shrink tube protecting the defective splice.

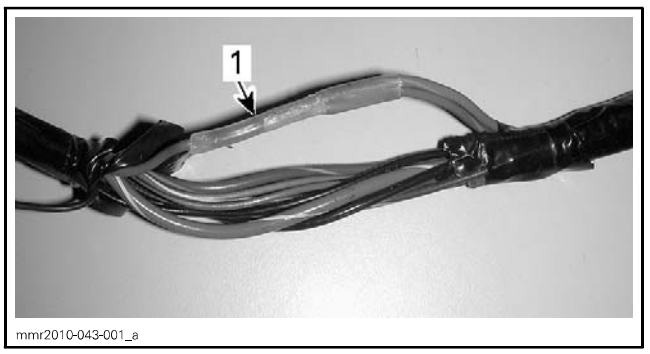

1. Shrink tube

4. Remove the shrink tube.
   4.1 Using a blade, cut the shrink tube.



NOTICE **Be careful with the blade to avoid cutting wires insulation.**

   4.2 Slightly heat the shrink tube using a heat gun.

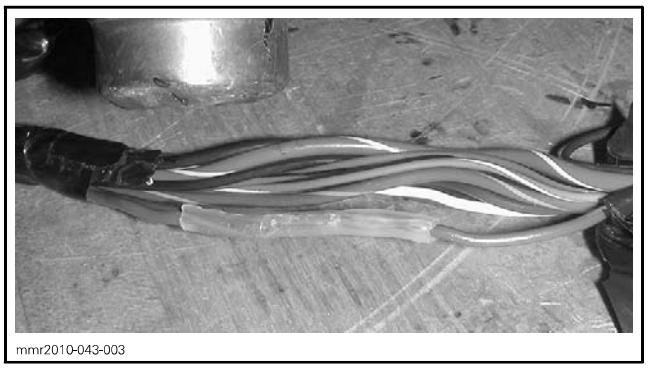

   4.3 Remove the shrink tube with long nose pliers.

5. Locate detached wire from splice.

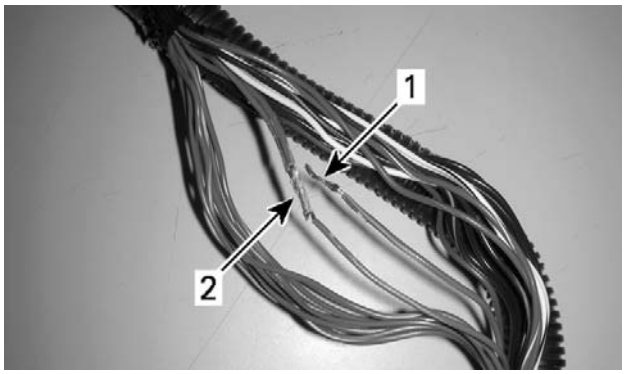

1. Detached wire
2. Splice

6. Twist detached wire around splice.

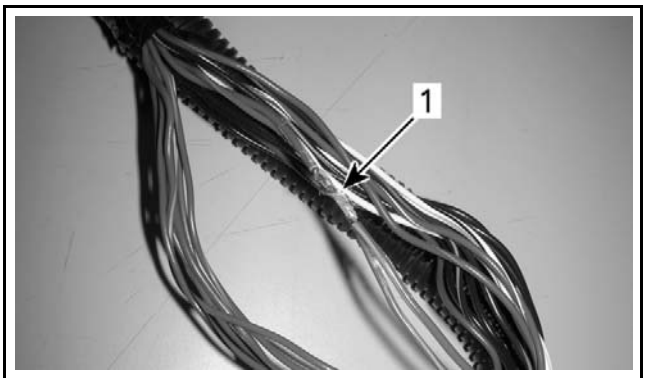

1. Twisted wire

7. Perform a tin solder on twisted wire.
8. Apply electrical tape to cover splice.

NOTE: Make sure tape overlaps on wire insulation, approximately 13 mm (1/2 in) each side.

9. Reinstall wires into protector tube.

CASE 2: Wire Broken from Splice

⚠ WARNING

Repairs described in this section should never be performed on harness sections that can be exposed to water.

1. Locate splice. Refer to splices location diagrams.
2. Remove wires from protector tube.
3. Locate the shrink tube protecting the defective splice.

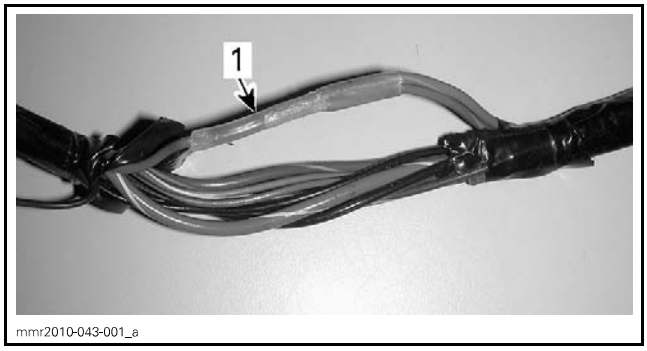

1. Shrink tube

4. Remove the shrink tube.
   4.1 Using a blade, cut the shrink tube.



NOTICE **Be careful with the blade to avoid cutting wires insulation.**

   4.2 Slightly heat the shrink tube using a heat gun.

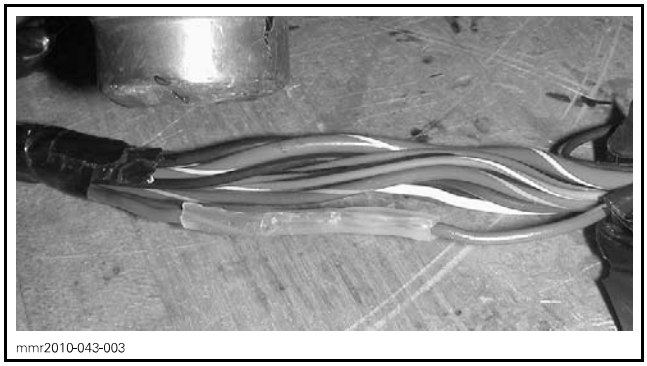

   4.3 Remove the shrink tube with long nose pliers.

5. Locate broken wire from splice.

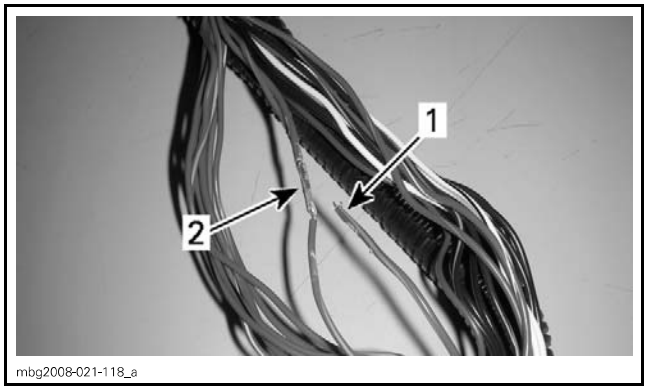

1. *Broken wire*
2. *Splice*

6. Strip wire insulation at the end of broken wire.
7. Strip wire insulation below the splice.

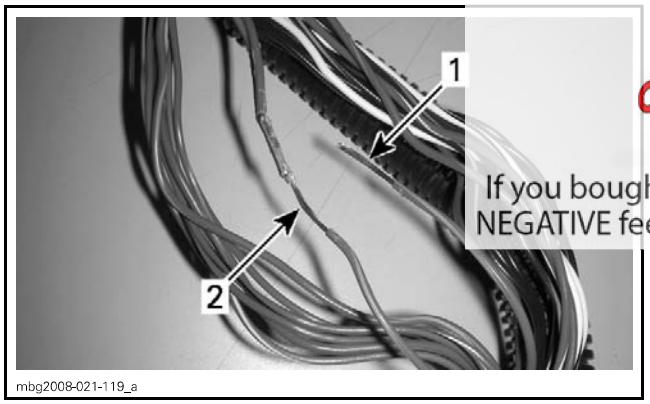

1. *Broken wire stripped*
2. *Splice wire stripped*

8. Twist wire around stripped wire.

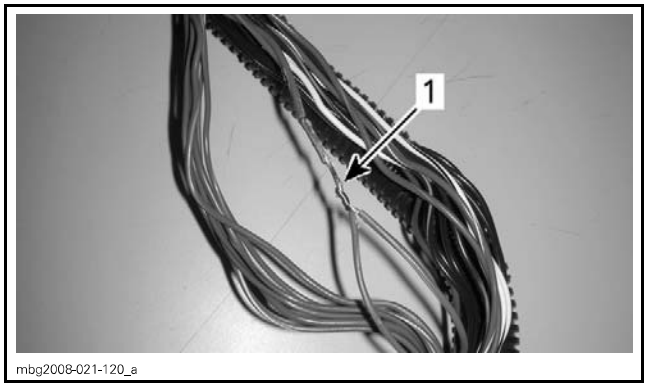

1. *Twisted wire*

9. Perform a tin solder on twisted wire.
10. Apply electrical tape to cover splice.

NOTE: Make sure tape overlaps on wire insulation, approximately 13 mm (1/2 in) each side.

11. Reinstall wires into protector tube.

NOTE: Always perform a solder on a bigger wire (lower gage).

Midwest Manuals
Green Manuals
Paperless Manuals
For a Better Tomorrow
If you bought this manual from any other seller please leave them NEGATIVE feedback and notify me at bestshopmanuals@gmail.com

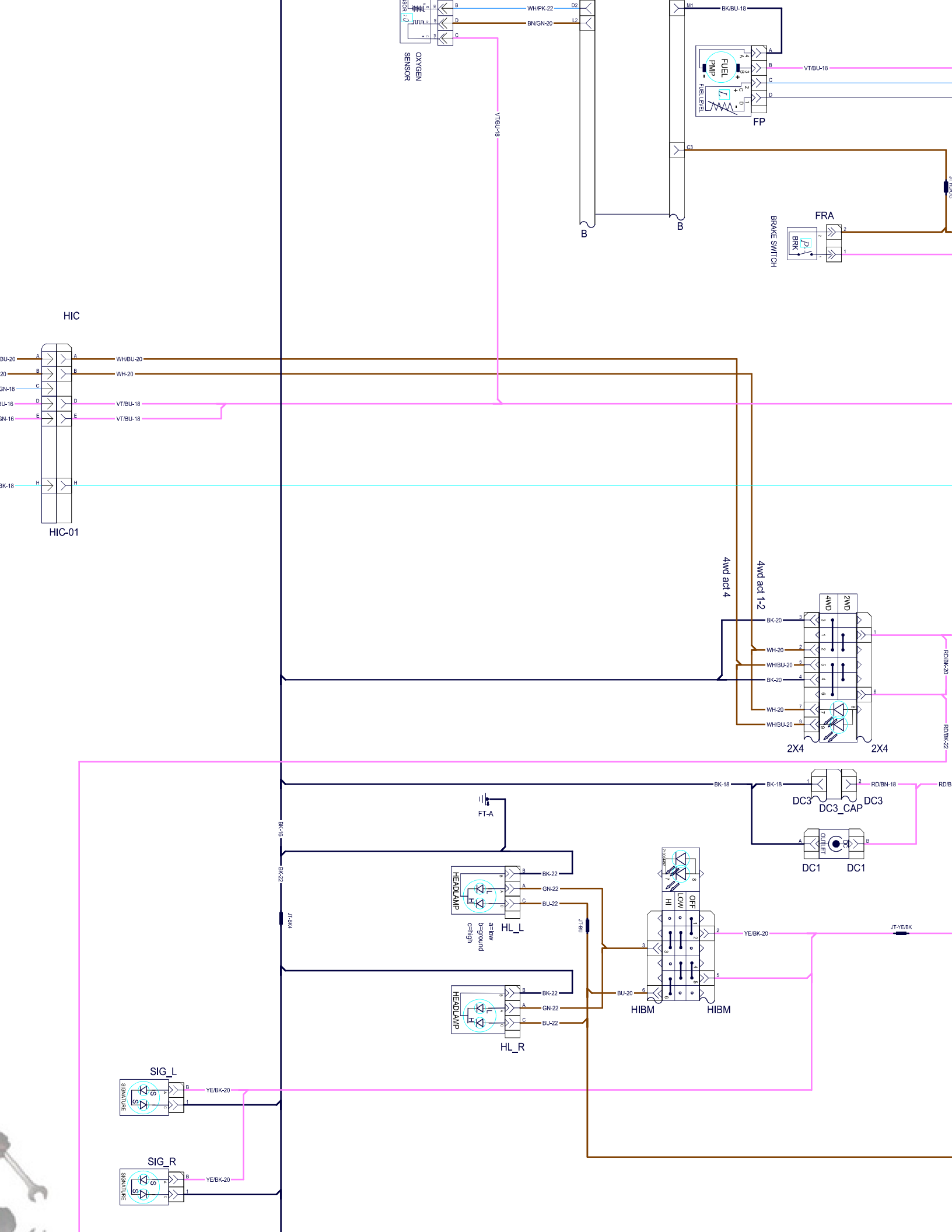

OXYGEN SENSOR
WH/PK-22
BN/GN-20
VT/BU-18
BK/BU-18
FUEL PMP
FUEL LEVEL
FP
B
B
FRA
BRAKE SWITCH
BRK
HIC
HIC-01
WH/BU-20
WH-20
VT/BU-18
4wd act 4
4wd act 1-2
4WD
2WD
BK-20
WH-20
WH/BU-20
2X4
2X4
RD/BK-20
RD/BK-22
BK-18
DC3
DC3_CAP
DC3
RD/BN-18
DC1
DC1
FT-A
BK-16
BK-22
HEADLAMP
HL_L
a=low
b=ground
c=high
BK-22
GN-22
BU-22
JT-BK4
JT-BU
HI
LOW
OFF
HIBM
HIBM
YE/BK-20
JT-YE/BK
BU-20
HL_R
SIG_L
SIGNATURE
YE/BK-20
SIG_R

Flat rate times are what the manufacturer pays the authorized dealer for warranty work, the times listed are usually unrealistic for even the most experienced mechanic and will take longer to actually complete.

Because of this dealers will usually charge more than the times posted.

I cannot be held responsible for any errors BRP has made in these service flat rate or parts manuals.

If you bought this manual from any other seller, they could be reselling my work.

Please leave them negative feedback & email me at bestshopmanuals@gmail.com .

Our goal is to be one of the BEST sellers on the internet by providing you with the BEST customer service and the BEST manuals on the market.

Thank you for choosing us.





can-am®

BRP

Volume 4

2017

Flat Rate Schedule
Barème de temps à taux fixe

MAVERICK X3
X ds
X rs

Effective September 23th, 2016
En vigueur le 23 septembre 2016

Subject to review from time to time, without notice or delay.
Sujet à révision sans préavis, ni délais.

2017 Volume 4 MAVERICK X3
2017 Volume 4 MAVERICK X3
2017 Volume 4 MAVERICK X3
2017 Volume 4 MAVERICK X3

INTRODUCTION

This publication governs all warranty labor allowances for 2017 BRP SSV

1. HOW DOES IT WORK

We follow the procedures detailed in the BRP *SSV Shop Manual*. The flat rate time is the maximum time allowed for a repair involving any given part. FLAT RATE TIME IS NOT CUMULATIVE. You must use the flat rate time given for the longest lasting operation.

NOTE: The *Flat Rate Time Schedule* was prepared by skilled mechanics using the hand tool usually found in workshops and all the special tools mentioned in the *Shop Manual*.

2. COMPILATION

The *Flat Rate Time Schedule* is compiled as follows:

The actual required time to perform the repair plus (+) 30% correction factor up to 3.0 hours or (+) 15% over 3.0 hours time to take into account, among others:

- Vehicle handling
- Obtaining the parts
- Diagnosis
- Cleaning
- Special compensation (rusted bolts).

3. HOW TO USE IT

Refer to the system you need, locate part of series of parts replaced. List JOB CODE in the appropriate column on claim.

SYSTEM		PAGE
01	ENGINE	04
02	CARBURETOR AND FUEL SYSTEM	07
03	IGNITION SYSTEM	22
04	STARTER	23
05	TRANSMISSION SYSTEM	24
06	BRAKE SYSTEM	31
07	STEERING SYSTEM AND FRONT SUSPENSION	33
08	REAR SUSPENSION SYSTEM AND TRACK	38
09	BODY	41
10	ELECTRICAL SYSTEM	49

NOTE: Unless otherwise specified, dismantling order is: top to bottom, exterior to interior, front to rear.

All fractions of hours are in tenths:

0.1 = 6 minutes
0.2 = 12 minutes, and so on

LEGEND:

* REQUIRES PRIOR AUTHORIZATION BY DISTRIBUTOR.
** INDICATE LABOUR TIME ON LINE “LABOUR ONLY“ OF CLAIM.
*** INDICATE $$$ AMOUNT ON “SUB-CONTRACTED LABOUR“ OF CLAIM.

IMPORTANT: Always use the longest flat rate time applicable to the repair performed.

4. JOB REQUIREMENTS

All the flat rate times mentioned in the following pages include the required operations such as: engine timing (rotary valve and ignition), connecting rod(s) alignment, cylinder head(s) torque or use of parallel bar, use of ignition tester, piston clearance/ring end gap measurement, crankshaft to crankcase measurement, cylinder honing, engine leak test.

5. ILLUSTRATIONS

The illustrations contained in this manual do not necessarily show every components of a given system as *Parts Catalog* do. Their purpose is to facilitate recognition of parts related to a flat rate time. Item numbers on illustrations correspond to the four digit Job Code.

6. FLAT RATE TIME SUGGESTION

SEND A WARRANTY CASE ON BOSSWeb INFO CENTER

In the case, you must provide the following information:

Section *Subject*:

- Flat rate time suggestion

Section *Your Question*:

- Model year;
- Model description;
- Description job code;
- Job code;
- Present flat rate;
- Suggested flat rate;
- Detailed repair procedure;

To ensure that your case will be promptly and efficiently processed please indicate the step by step repair procedure you performed.

INTRODUCTION

Cette publication détermine le temps de main-d'oeuvre couvert par la garantie pour les VCC BRP 2017.

1. UTILISATION DU MANUEL

En procédant de la façon indiquée dans le *Manuel de réparation VCC* BRP, chaque temps donné représente le maximum permis pour une réparation portant sur cette pièce. LES TEMPS NE SONT PAS CUMULATIFS. On doit inscrire le temps donné pour l'opération qui prend le plus de temps.

REMARQUE: Le *Barème de temps à taux fixe* a été préparé par des mécaniciens compétents utilisant les outils que l'on retrouve normalement dans les ateliers de réparation, en plus de tous les outils spéciaux mentionnés dans le *Manuel de réparation*.

2. COMPILATION

Le *Barème de temps à taux fixe* a été établi en compilant le temps nécessaire pour faire la réparation plus (+) un facteur de correction de 30% lorsqu'un travail dure 3.0 heures et moins, ou (+) 15% lorsqu'un travail dure plus de 3.0 heures. Cette compilation comprend, entre autres, les étapes suivantes:

- Manutention du véhicule
- Nettoyage
- Aller chercher les pièces, essais physiques
- Compensation spéciale (boulons rouillés)
- Diagnostic.

3. UTILISATION DU BARÈME

Se reporter à la section désirée, repérer la pièce ou l'ensemble de pièces remplacées et inscrire le CODE DE TRAVAIL dans la colonne appropriée sur la formule de réclamation.

SYSTÈME		PAGE
01	MOTEUR	04
02	CARBURATEUR ET SYSTÈME D'ALIMENTATION D'ESSENCE	07
03	SYSTÈME D'ALLUMAGE	22
04	DÉMARREUR	23
05	SYSTÈME DE TRANSMISSION	24
06	SYSTÈME DE FREIN	31
07	SYSTÈME DE DIRECTION ET SUSPENSION AVANT	33
08	SYSTÈME DE SUSPENSION ARRIÈRE ET CHENILLE	38
09	CARROSSERIE	41
10	SYSTÈME ÉLECTRIQUE	49

REMARQUE: Sauf indication contraire, le démontage doit s'effectuer de haut en bas, de l'extérieur vers l'intérieur, de l'avant vers l'arrière.

Toutes les fractions d'heures sont exprimées en dixièmes:

0.1 = 6 minutes
0.2 = 12 minutes, et ainsi de suite

LÉGENDE:

* AUTORISATION REQUISE AVANT LE REMPLACEMENT.
** INSCRIRE LE TEMPS À LA LIGNE «MAIN-D'OEUVRE SEULEMENT».
*** INSCRIRE LE MONTANT $$$ À LA LIGNE «OUVRAGE SOUS-CONTRACTÉ».

IMPORTANT: Toujours utiliser le temps donné à l'opération qui nécessite le plus de temps.

4. TRAVAUX REQUIS

Tous les temps mentionnés dans les pages suivantes incluent les opérations telles que: réglage du moteur (valve rotative et allumage), alignement de la ou des bielles, couple de serrage de la ou des culasses ou l'utilisation de barres parallèles, utilisation du vérificateur d'allumage, mesure du jet des pistons/jeu en bout des segments, mesure de l'écart entre le vilebrequin et le carter, rectification du cylindre, vérification de fuite du moteur.

5. ILLUSTRATIONS

Contrairement aux *Catalogues de pièces*, les illustrations de ce manuel ne montrent pas nécessairement chacune des pièces qu'elles représentent, leur raison d'être étant plutôt de faciliter la reconnaissance des pièces reliées à un barème de temps à taux fixe. **Les numéros d'items sur les illustrations correspondent aux quatre derniers chiffres du code de travail.**

6. SUGGESTION DE BARÈME DE TEMPS À TAUX FIXE

ENVOYEZ UNE REQUÊTE GARANTIE BOSSWeb DEPUIS LA SECTION INFO CENTRE

Dans cette requête, vous devez fournir les informations suivantes:

Section *Objet*:

- Suggestion de barème de temps à taux fixe

Section *Votre Question*:

- L'année modèle;
- Description du modèle;
- Description du code de travail;
- Code de travail;
- Temps actuel;
- Temps suggéré;
- Détails de la marche à suivre;

Pour s'assurer que votre demande sera traitée dans les plus brefs délais et efficacement, s.v.p. nous fournir toutes les étapes de réparation dans les détails de la marche à suivre.

2017

SSV/ VCC

TABLE	DESCRIPTION	MODEL/MODÈLE	ENGINE TYPE/ TYPE DE MOTEUR
15	MAVERICK X3	7XHA/7AHB 7AHC	900T CVT
	MAVERICK X3 Xds	7SHA/7SHB 7SHC/7SHD	
	MAVERICK X3 Xrs	7THA/7THB 7THD	

SYSTEM SYSTÈME	CODE	DESCRIPTION	MAVERICK X3
			15
01	**00**	**NO LABOR INVOLVED AUCUNE MAIN D'OEUVRE**	**0**
01 *	01	REMOVE AND REPLACE ENGINE (ASS'Y) REMPLACEMENT DU MOTEUR (COMPLET)	6.9
01	03	OIL PRESSURE SWITCH INTERRUPTEUR DE PRESSION D'HUILE	0.3
01	04	HEAT SHEILD (EXHAUST) DEFLECTEUR CHALEUR	0.3
01	08	FAN AND/OR FAN SUPPORT VENTILATEUR ET/OU SUPPORT DE VENTILATEUR	0.7
01	18	SENDER TEMPERATURE (ENGINE) CAPTEUR DE TEMPÉRATURE (MOTEUR)	0.4
01	19	THERMOSTAT THERMOSTAT	1.5
01	21	COOLANT HOSE T-FITTING (ONE OR TWO) BOYAU DE LIQUIDE DE REFROIDISSEMENT RACCORD EN T (1 OU 2)	0.5
01	37	RADIATOR INLET HOSE BOYAU D'ENTRÉE DU RADIATEUR	0.6
01	38	WATER PUMP SHAFT (ALL PARTS) ARBRE DE POMPE À L'EAU (TOUTES LES PIÈCES)	9.2
01	45	ENGINE DAMPER (1 OR ALL) TAMPONS ANTI-VIBRATION DU MOTEUR (1 OU TOUS)	5.6
01	46	RADIATOR AND/OR GROMMMET RADIATEUR ET/OU PASSE-FILS	1.0
01	51	CYLINDER HEAD GASKET JOINT DE CULASSE	8.5
01	63	CRANKSHAFT BEARINGS PTO ROULEMENTS DE VILEBREQUIN, COTE PDM	1.4
01	69	CRANKSHAFT VILEBREQUIN	10.1
01	70	MUFFLER AND/OR EXHAUST GASKET AND/OR CLAMP SILENCIEUX D'ÉCHAPPEMENT ET/OU JOINT D'ÉCHAPPEMENT ET/OU BRIDE DE SERRAGE	0.5
01	71	EXHAUST MANIFOLD COLLECTEUR D'ÉCHAPPEMENT	0.7
01	79	COOLANT HOSE (RADIATOR TO TANK) BOYAU DU SYSTÈME DE REFROIDISSEMENT (RÉSERVOIR AU RADIATEUR)	0.5
01	87	MUFFLER SUPPORT SUPPORT DU SILENCIEUX	0.6
01	88	RUBBER MOUNT (MUFFLER) TAMPON D'ANCRAGE (SILENCIEUX)	0.3

SYSTEM SYSTÈME	CODE	DESCRIPTION	MAVERICK X3 15
01	90	ENGINE OIL FILTER FILTRE À HUILE DU MOTEUR	0.3
01	96	OIL SIEVE AND/OR O-RING AND/OR COLLECTOR AND/OR RUBBER RING AND/OR COVER CRIBLE D'HUILE ET/OU JOINT TORIQUE ET/OU COLLECTEUR ET/OU ANNEAU DE CAOUTCHOUC ET/OU COUVERCLE	7.7
01	98	COOLING RESERVOIR RÉSERVOIR D'ANTIGEL	0.4
01	100	RADIATOR OUTLET HOSE BOYAU DE SORTIE DU RADIATEUR	0.6
01	101	PISTON, PIN, CIRCLIP, RINGS (1) PISTON, GOUPILLE, CIRCLIP, SEGMENTS (1)	10.2
01	102	PISTONS, PINS, CIRCLIPS, RINGS (2) PISTONS, GOUPILLES, CIRCLIPS, SEGMENTS (2)	10.3
01	103	PISTON,BEARING,PIN (3 PISTONS) PISTON,ROULEMENT,AXE (3 PISTONS)	10.5
01	109	VALVE COVER AND/OR GASKET COUVERCLE DE SOUPAPE ET/OU JOINT D'ÉTANCHÉITÉ	2.4
01	111	TIMING GEAR PIGNON DE DISTRIBUTION	3.6
01	114	CYLINDER HEAD AND/OR GASKET CULASSE ET/OU JOINT D'ÉTANCHÉITÉ	9.2
01	116	EXHAUST AND/OR INLET VALVE AND/OR SPRING AND/OR SEAL VALVE ADMISSION ET/OU ÉCHAPPEMENT ET/OU RESSORT ET/OU ANNEAU D'ÉTANCHÉITÉ	8.4
01	119	WATER PUMP HOUSING AND/OR IMPELLER CARTER DE LA POMPE À EAU ET/OU ROUE À AILETTES	1.0
01	132	OIL PUMP GEAR ENGRENAGE DE LA POMPE À HUILE	4.2
01	133	OIL PIPE TUYAU À L'HUILE	0.4
01	138	CRANKCASE RESEAL OR GASKET RECELLEMENT DU CARTER ET/OU JOINT D'ÉTANCHÉITÉ	9.0
01	139	CRANKCASE REPLACEMENT REMPLACEMENT DU CARTER	10.5
01	146	OIL PUMP GEAR (2) ENGRENAGE POMPE À L'HUILE(2)	4.2
01	154	TIMING CHAIN CHAÎNE D'ENGRENAGE	9.0
01	179	CHAIN GUIDE GUIDE DE CHAÎNE	3.4
01	182	OIL RADIATOR AND/OR O-RING RADIATEUR D'HUILE ET/OU JOINT D'ÉTANCHÉITÉ	0.5

SYSTEM SYSTÈME	CODE	DESCRIPTION	MAVERICK X3 15
01	183	OIL PUMP COVER A/O SHAFT A/O ROTOR COUVERCLE POMPE E/O ARBRE E/O ROTOR	4.4
01	184	OIL PUMP HOUSING A/O ALL PARTS BOITIER POMPE HUILE E/O TOUTES PIECES	4.4
01	190	PTO HOUSING AND/OR GASKET BOITIER PDM ET/OU JOINT	1.2
01	191	CHAIN TENSION GUIDE GUIDE DE TENSION DE CHAÎNE	5.0
01	192	CHAIN TENSIONER (ASS'Y) TENDEUR DE CHAÎNE (COMPLET)	0.4
01	200	WATER PUMP GEAR ENGRENAGE DE LA POMPE À EAU	4.2
01	215	OIL DIPSTICK JAUGE À HUILE	0.3
01	216	PRESSURE CAP BOUCHON À PRESSION	0.3
01	245	OUTPUT CRANKSHAFT SEAL (PTO SIDE) ANNEAU ÉTANCHÉITÉ SORTIE VILEBREQUIN (CÔTÉ PDM)	1.4
01	246	WATER PUMP GEAR AND/OR SEAL ARBRE POMPE À EAU ET/OU JOINT ÉTANCHÉITÉ	4.6
01	248	BREATHER GEAR AND/OR V-RING RENIFLARD ET/OU ANNEAU ÉTANCHÉITÉ EN «V»	2.5
01	250	CRANKSHAFT POSITION SENSOR (CPS) CAPTEUR POSITION DU VILEBREQUIN (CPV)	0.4
01	255	EXHAUST AND/OR INLET VALVES AND/OR SPRINGS AND/OR SEALS (4) ÉCHAPPEMENT ET/OU VALVES ADMISSION ET/OU RESSORTS ET/OU ANNEAUX D'ÉTANCHÉITÉ (4)	8.0
01	256	EXHAUST AND/OR INLET VALVES AND/OR SPRINGS AND/OR SEALS (8) ÉCHAPPEMENT ET/OU VALVES ADMISSION ET/OU RESSORTS ET/OU ANNEAUX D'ÉTANCHÉITÉ (8)	8.2
01	257	EXHAUST/INLET VALVES A/O SPRINGS A/O SEALS (12) VALVES ADMISSION/ÉCHAPPEMENT E/O RESSORTS E/O ANNEAUX (12)	8.4
01	264	LONG BLOCK ENSEMBLE CARTER - CYLINDRE - CULASSE	9.1
01	274	CRANKSHAFT PLAIN BEARINGS PALIERS LISSE DU VILEBREQUIN	10.5
01	311	CAMSHAFT INTAKE/EXHAUST AND/OR CAMSHAFT BRACKETS ARBRE A CAME ADMISSION/ECHAPPEMENT ET/OU SUPPORTS D'ARBRE A CAME	4.0
01	315	OIL SUMP COVER AND GASKET COUVERCLE DU CARTER D'HUILE ET JOINT D'ÉTANCHÉITÉ	4.2
01	320	THROTTLE PEDAL PÉDALE D'ACCÉLÉRATEUR	0.4
04	340	PLUG SCREW BOULON FILETE	0.3

SYSTEM SYSTÈME	CODE	DESCRIPTION	MAVERICK X3 15
01	352	OXYGEN SENSOR CAPTEUR D'OXYGÈNE	0.4
01	353	INJECTORS (ALL) INJECTEURS (TOUS)	1.0
01	369	TURBOCHARGER (ASS'Y) TURBOCOMPRESSEUR (COMPLET)	2.5
01	370	OIL PRESSURE HOSE BOYAU DE PRESSION D'HUILE	0.5
01	371	OIL RETURN HOSE BOYAU DE RETOUR D'HUILE	0.4
01	375	FRONT HEAT SHEILD DEFLECTEUR DE CHALEUR AVANT	0.3
01	400	SOLENOIDE VALVE SOUPAPE SOLENOIDE	0.5
01	401	COOLANT TUBE (TURBO) TUYAU DE REFROIDISSEMENT (TURBO)	0.6
01	402	HEAT SHIELD (TURBO) DEFLECTEUR DE CHALEUR (TURBO)	0.3
01	403	TURBO GASKET JOINT D'ETANCHEITE DU TURBO	2.5

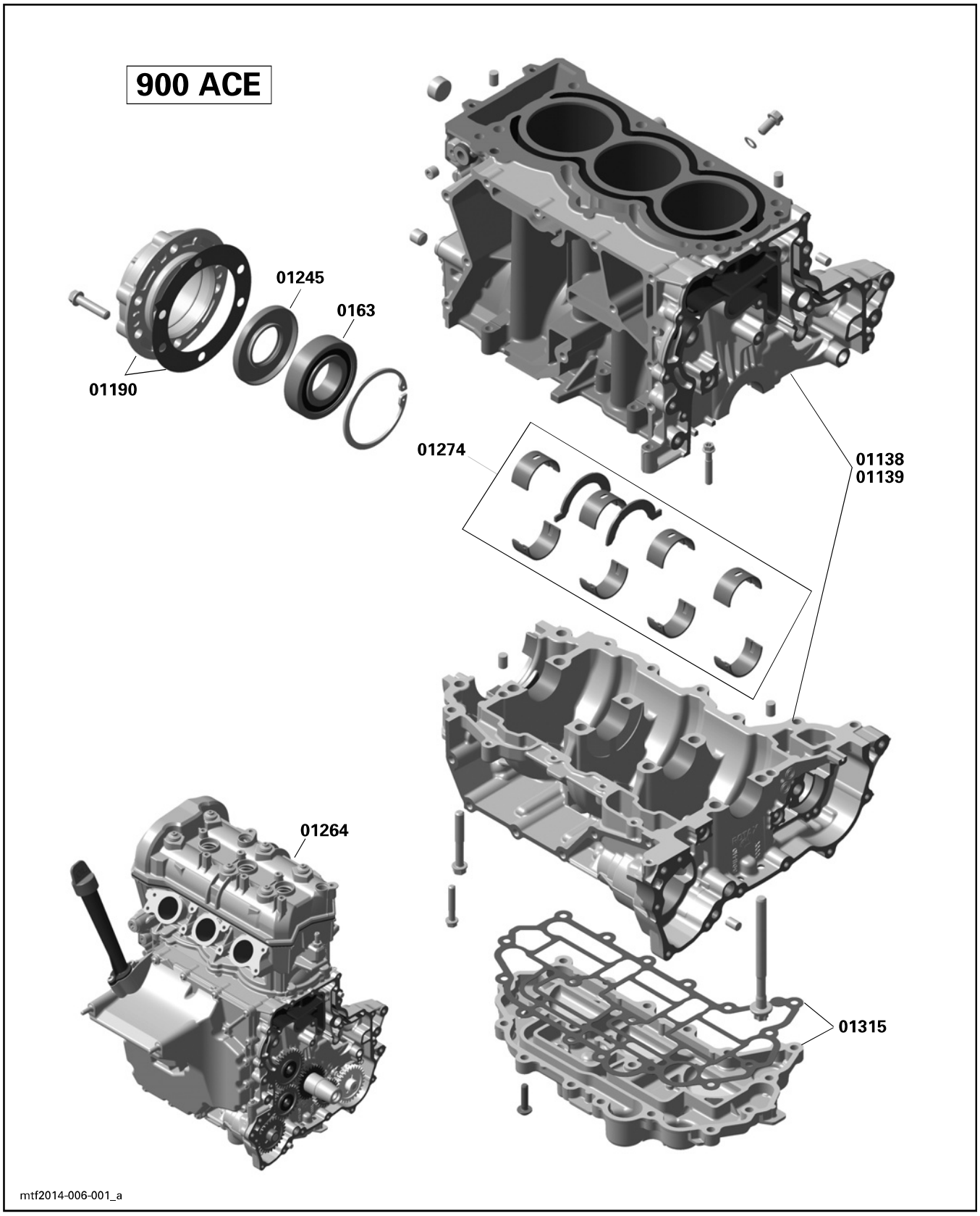
900 ACE
01245
0163
01190
01274
01138
01139
01264
01315
mtf2014-006-001_a

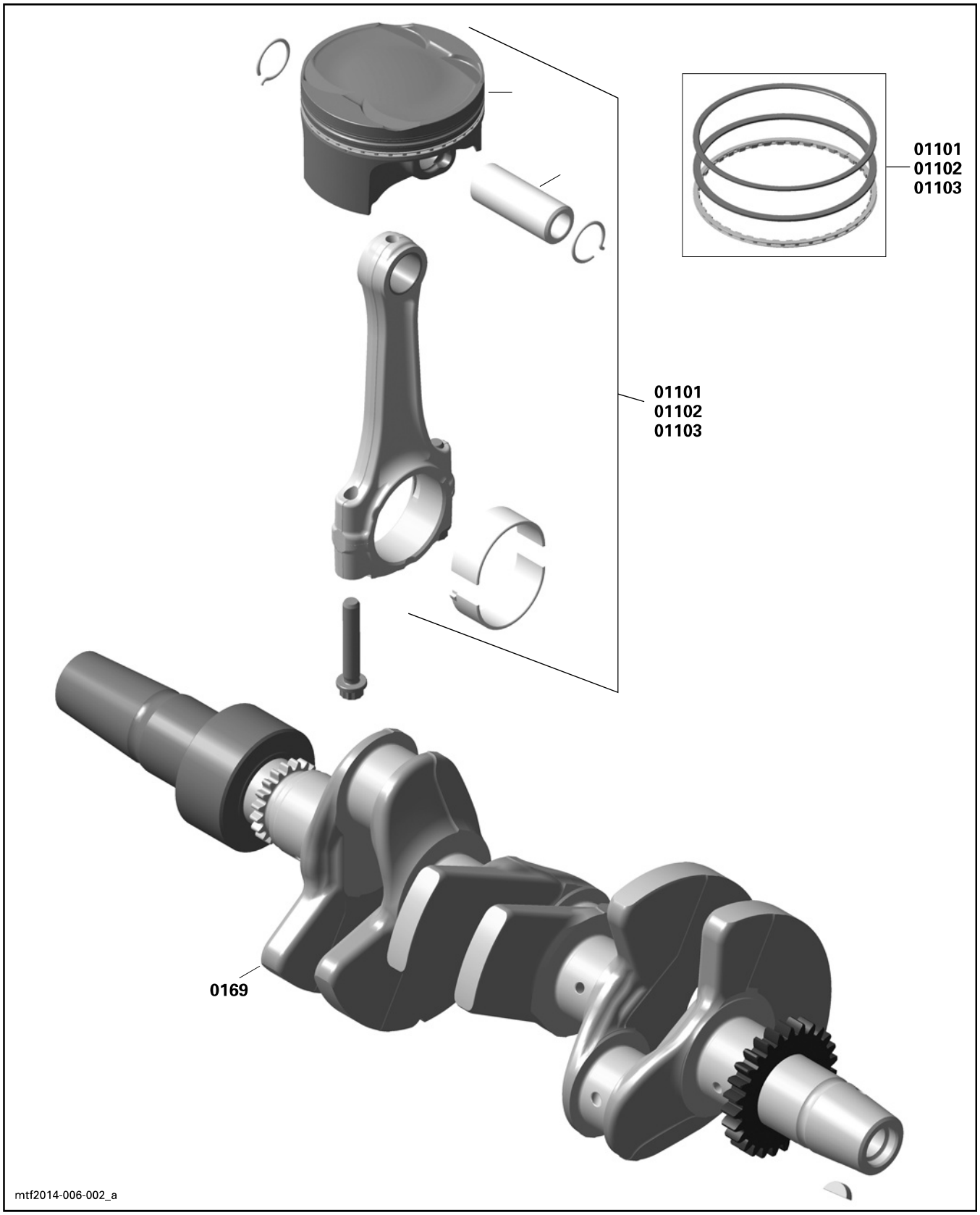
01101
01102
01103
01101
01102
01103
0169
mtf2014-006-002_a

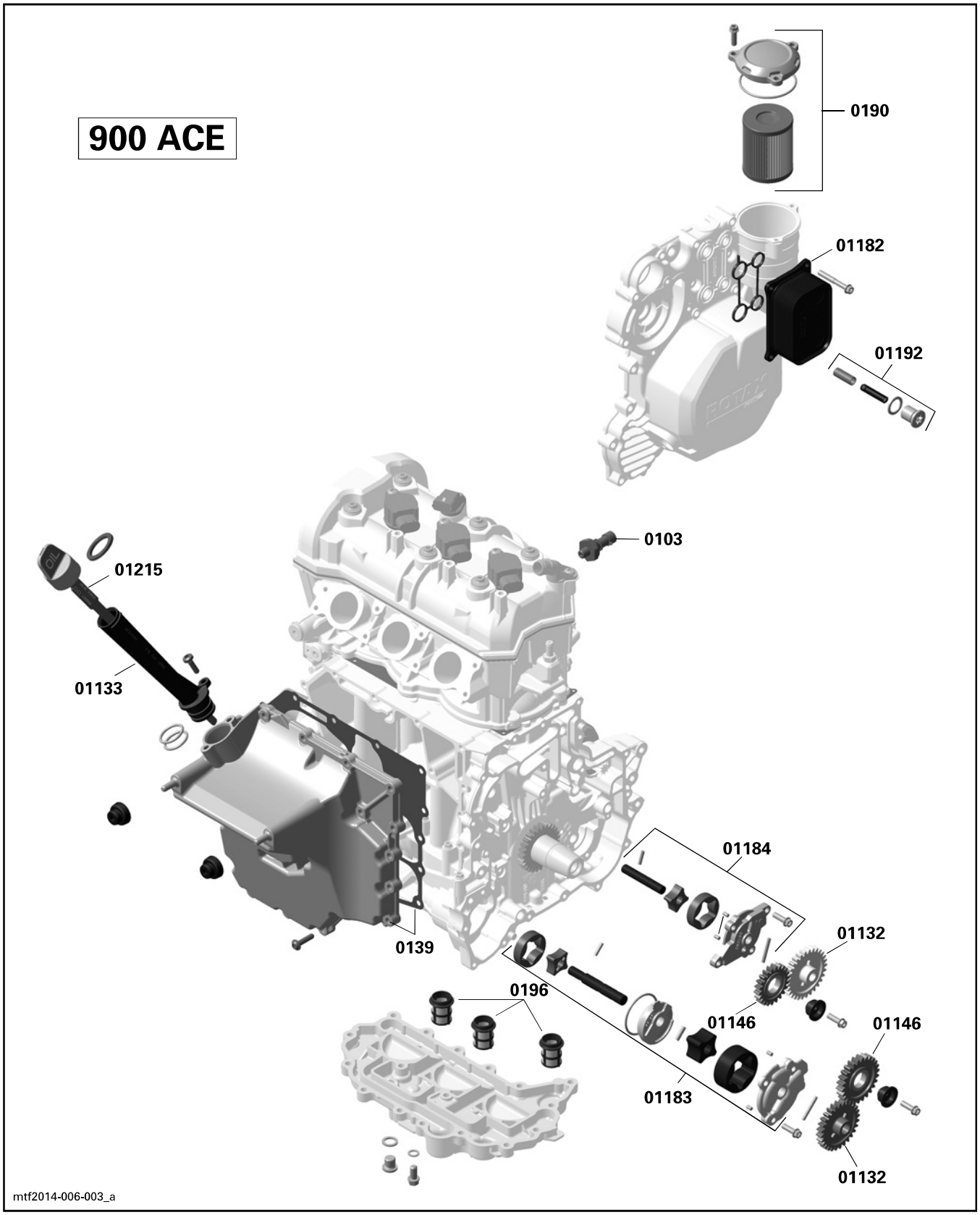
900 ACE
0190
01182
01192
0103
01215
01133
01184
01132
0139
0196
01146
01146
01183
01132
mtf2014-006-003_a

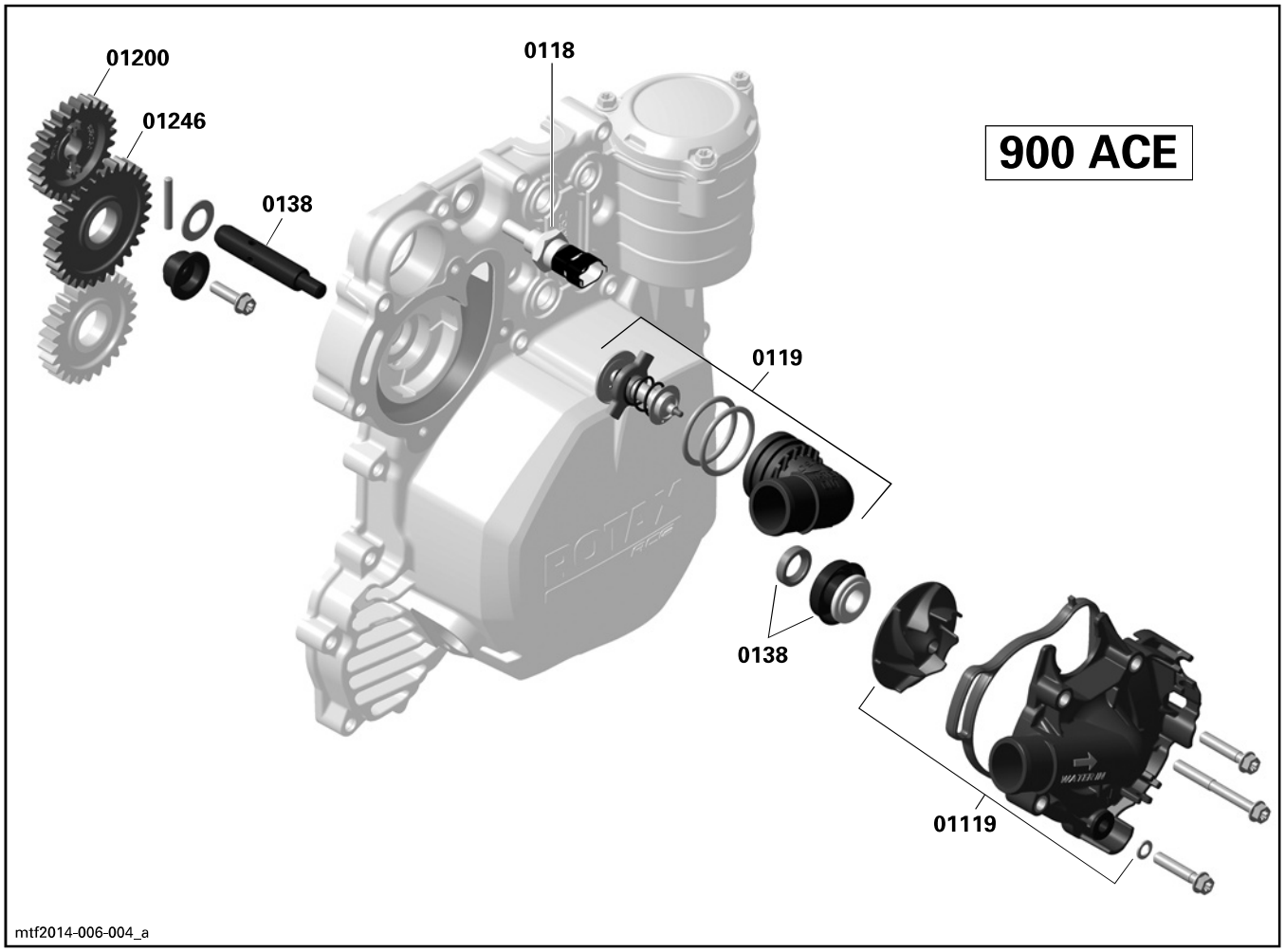
01200
01246
0138
0118
900 ACE
0119
0138
01119
mtf2014-006-004_a

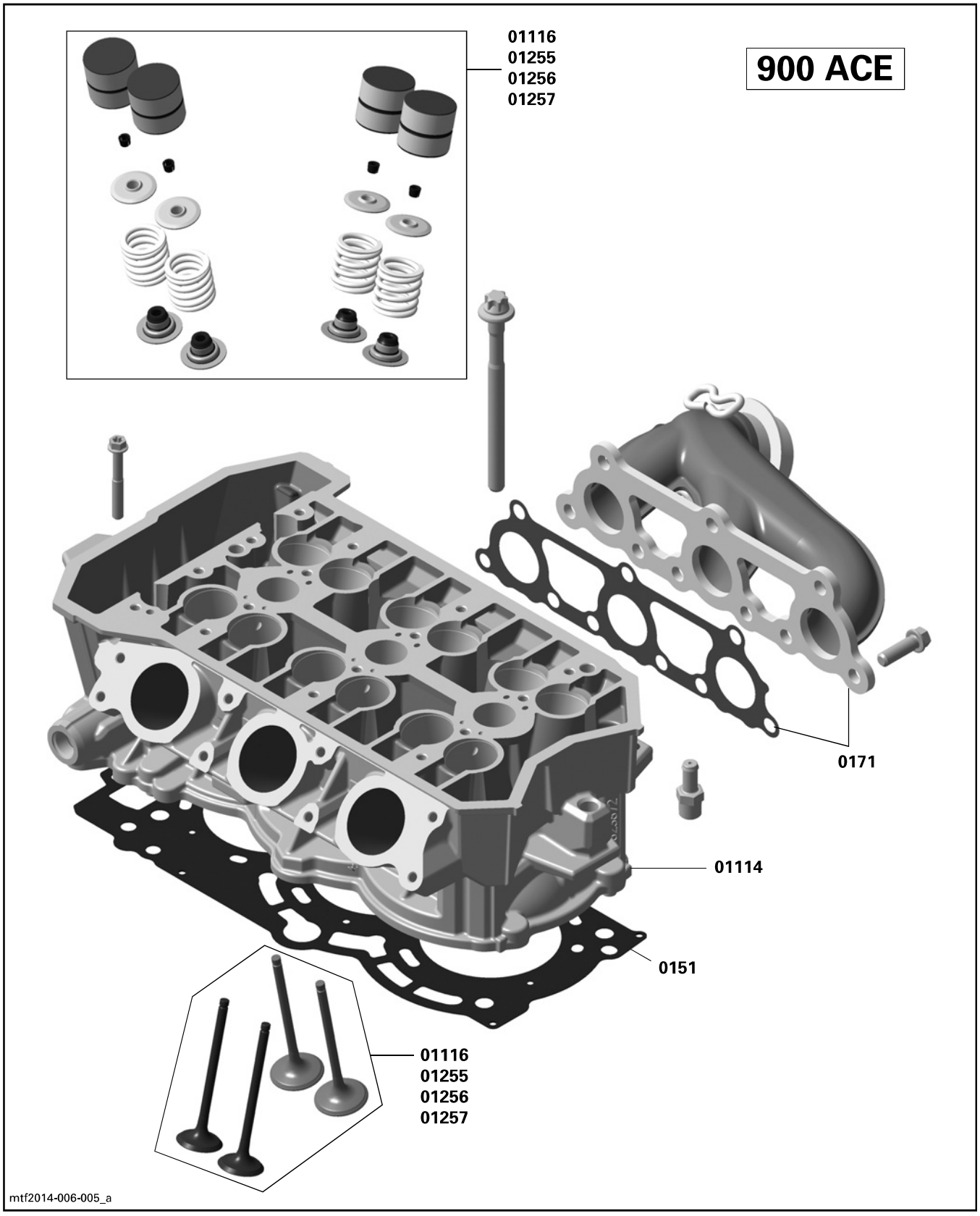
01116
01255
01256
01257
900 ACE
0171
01114
0151
01116
01255
01256
01257
mtf2014-006-005_a

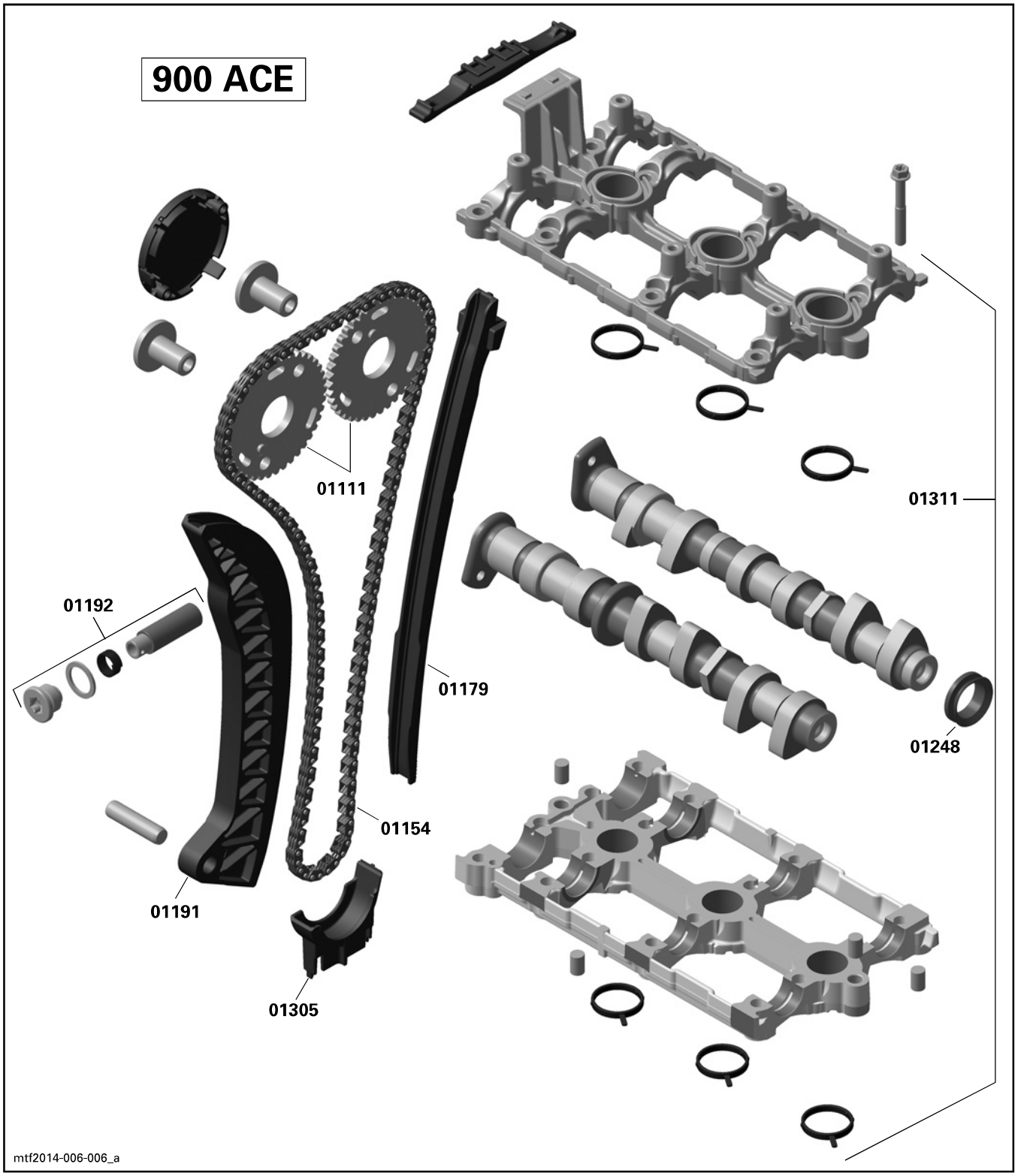
900 ACE
01111
01311
01192
01179
01248
01154
01191
01305
mtf2014-006-006_a

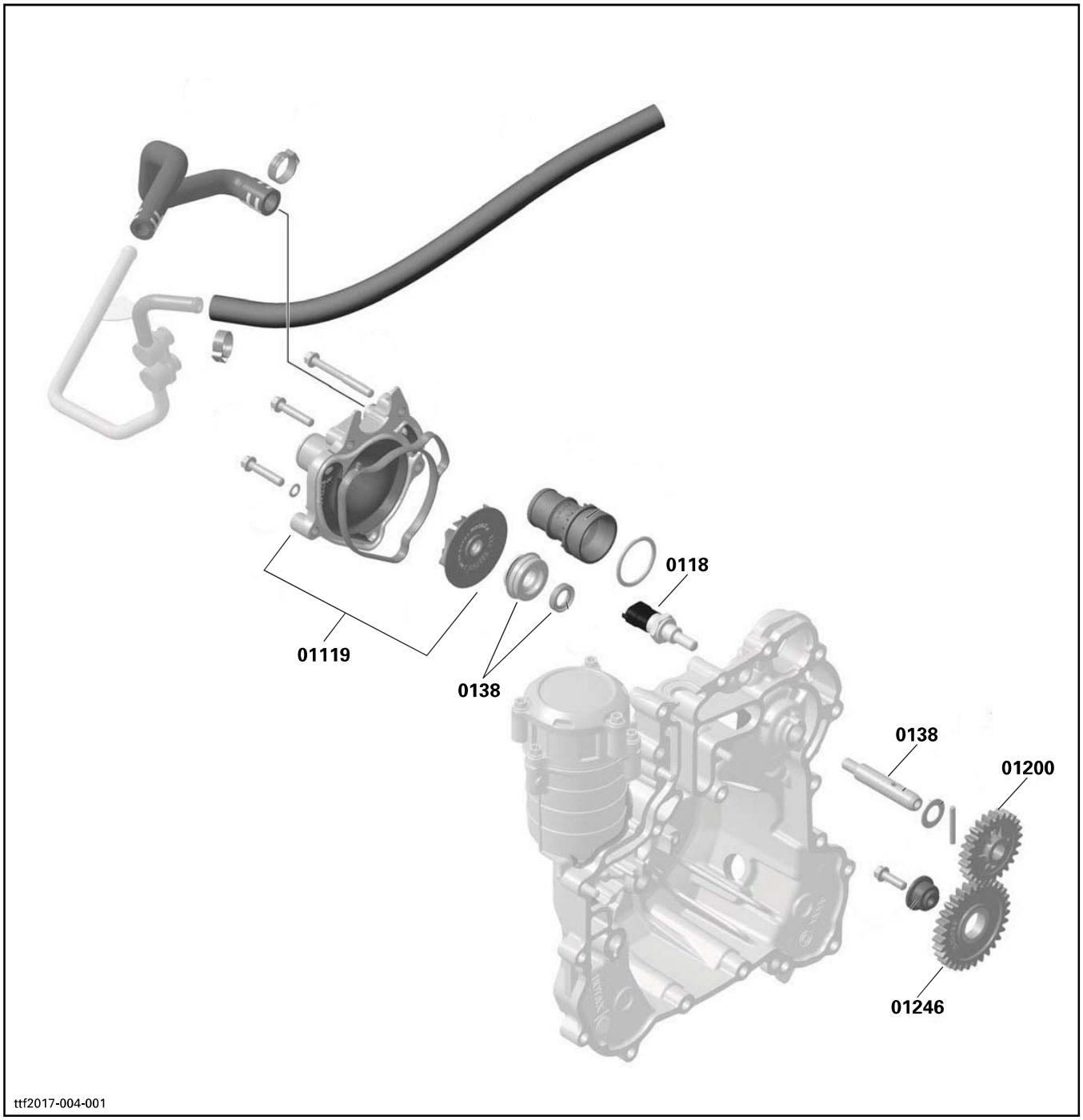
0118
01119
0138
0138
01200
01246
ttf2017-004-001

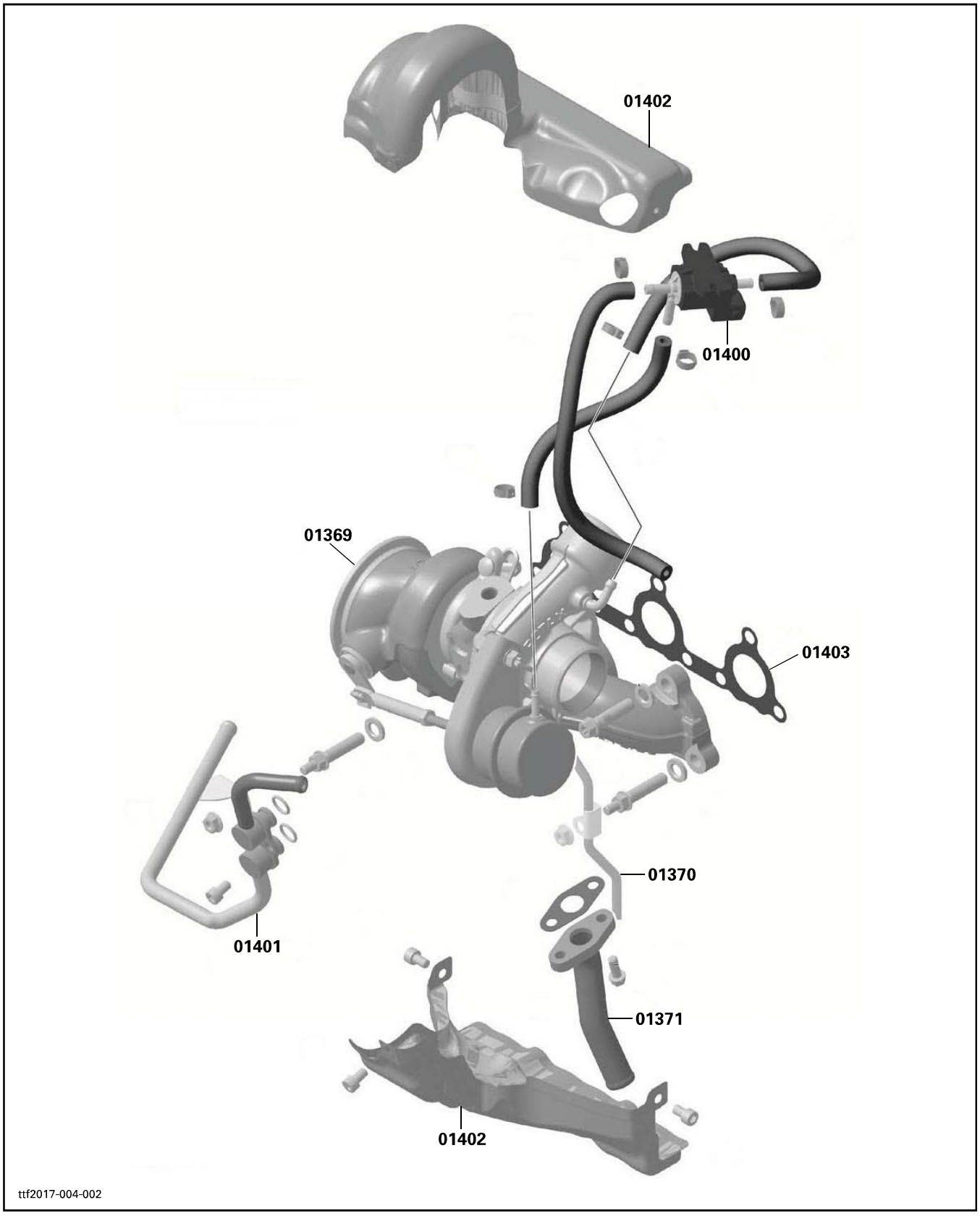
01402
01400
01369
01403
01370
01401
01371
01402
ttf2017-004-002

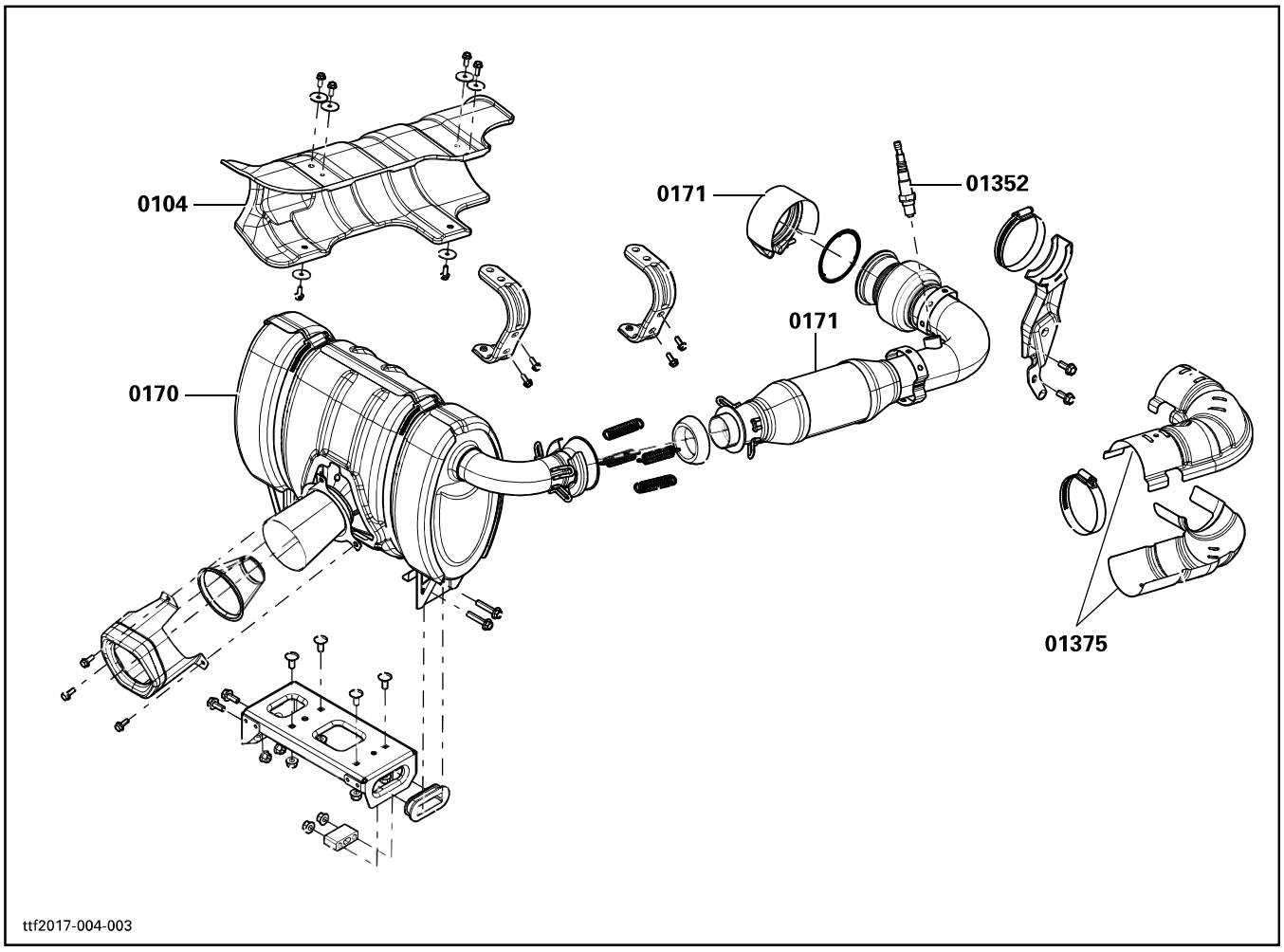
0104
0171
01352
0171
0170
01375
ttf2017-004-003

SYSTEM SYSTÈME	CODE	DESCRIPTION	MAVERICK X3 15
02	00	**NO LABOR INVOLVED** **AUCUNE MAIN D'OEUVRE**	0
02	01	AIR INTAKE SILENCER (ASS'Y) SILENCIEUX D'ADMISSION D'AIR (COMPLET)	0.3
02	16	INTAKE ADAPTOR ADAPTATEUR D'ADMISSION	0.5
02	19	AIR INTAKE TUBE TUYAU D'ADMISSION D'AIR	0.3
02	23	REAR AIR INTAKE TUBE AND/OR SLEEVE TUYAU D'ADMISSION D'AIR ARRIÈRE ET/OU DOUILLE	0.3
02	46	AIR TEMPERATURE SENSOR CAPTEUR DE TEMPÉRATURE D'AIR	0.4
02	58	FUEL TANK RÉSERVOIR D'ESSENCE	0.7
02	60	FUEL CAP BOUCHON DU RÉSERVOIR À ESSENCE	0.3
02	69	AIR FILTER FILTRE À AIR	0.3
02	72	INTAKE MANIFOLD CONNECTEUR D'ADMISSION	1.0
02	79	FUEL RAIL (1 OR 2) RAMPE D'ESSENCE (1 OU 2)	0.6
02	81	THROTTLE BODY (ASS'Y) CARTER D'ACCÉLÉRATEUR (COMPLET)	0.5
02	83	AIR PRESSURE SENSOR CAPTEUR DE PRESSION D'AIR	0.4
02	89	FUEL PUMP MODULE MODULE POMPE À ESSENCE	0.4
02	94	FEMALE QUICK FITTING CONNECTEUR RAPIDE FEMELLE	0.4
02	99	FUEL INJECTION HOSE (ASS'Y) BOYAU À INJECTION D'ESSENCE (COMPLET)	0.8
02	108	FUEL PUMP NUT AND/OR GASKET ECROU DE LA POMPE A ESSENCE ET/OU JOINT D'ETANCHEITE	0.3
02	115	PLENUM CHAMBRE D'AIR	1.3
02	119	CHECK VALVE SOUPAPE DE RETENUE	0.3
02	122	INTERCOOLER REFROIDISSEUR	0.5
02	123	INTERCOOLER SUPPORT SUPPORT DE REFROIDISSEUR	0.4

INTAKE AND FUEL SYSTEM
ADMISSION ET SYSTÈME D'ALIMENTATION D'ESSENCE

SYSTEM SYSTÈME	CODE	DESCRIPTION	MAVERICK X3
			15
02	124	INTERCOOLER HOSE BOYAU INTERCOOLER	0.3
02	125	TURBO COMMANDE VALVE (TCV) SOUPAPE DE COMMANDE TURBO (TCV)	0.4
02	128	FUEL TANK STRAP (ONE OR TWO) SANGLE DE RESERVOIR D'ESSENCE (UNE OU DEUX)	0.7
02	129	FILLER NECK GOULOT DE REMPLISSAGE	0.3
02	130	FILLER HOSE BOYAU DE REMPLISSAGE	0.3

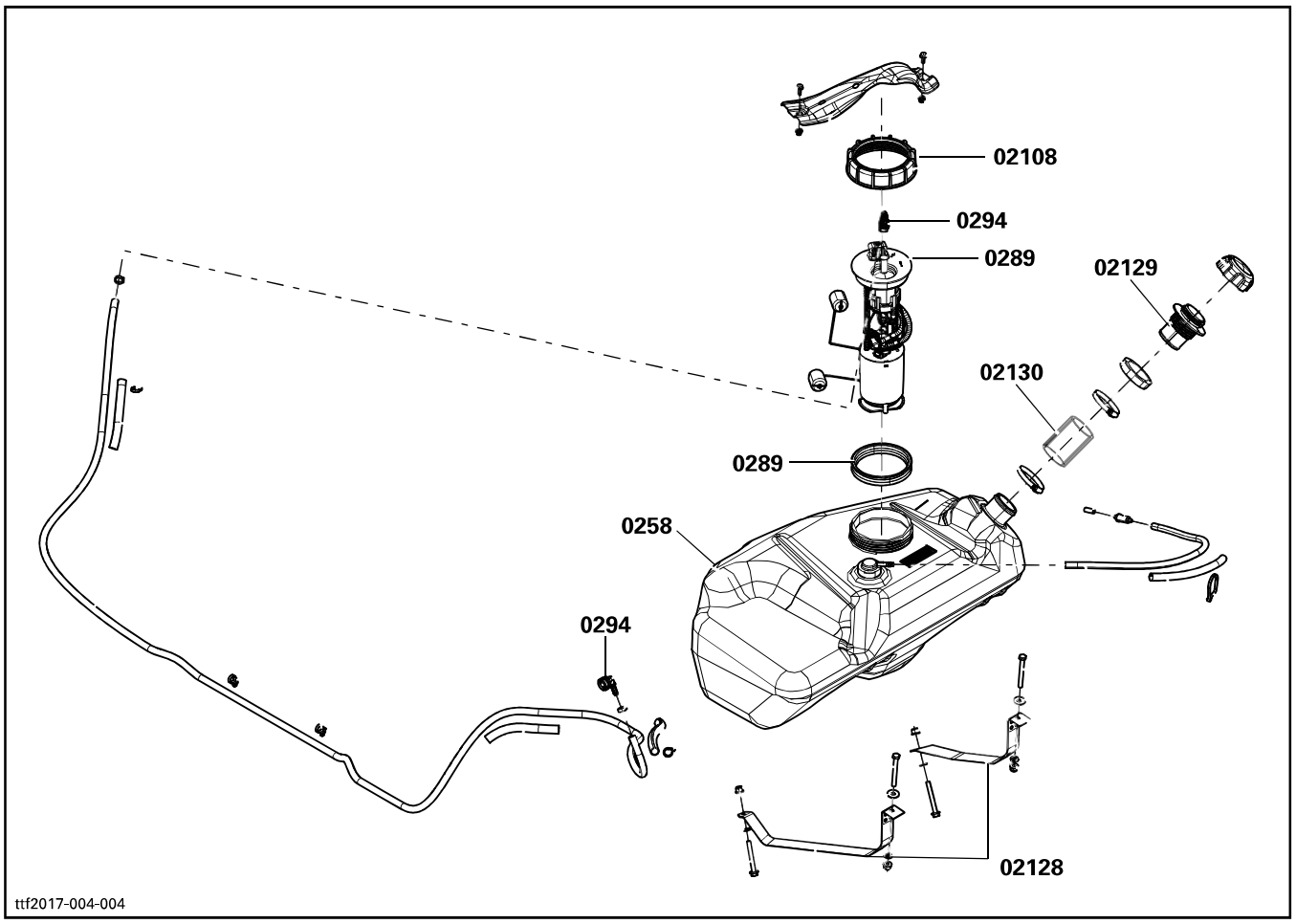
02108
0294
0289
02129
02130
0289
0258
0294
02128
ttf2017-004-004

INTAKE AND FUEL SYSTEM
ADMISSION ET SYSTÈME D'ALIMENTATION D'ESSENCE

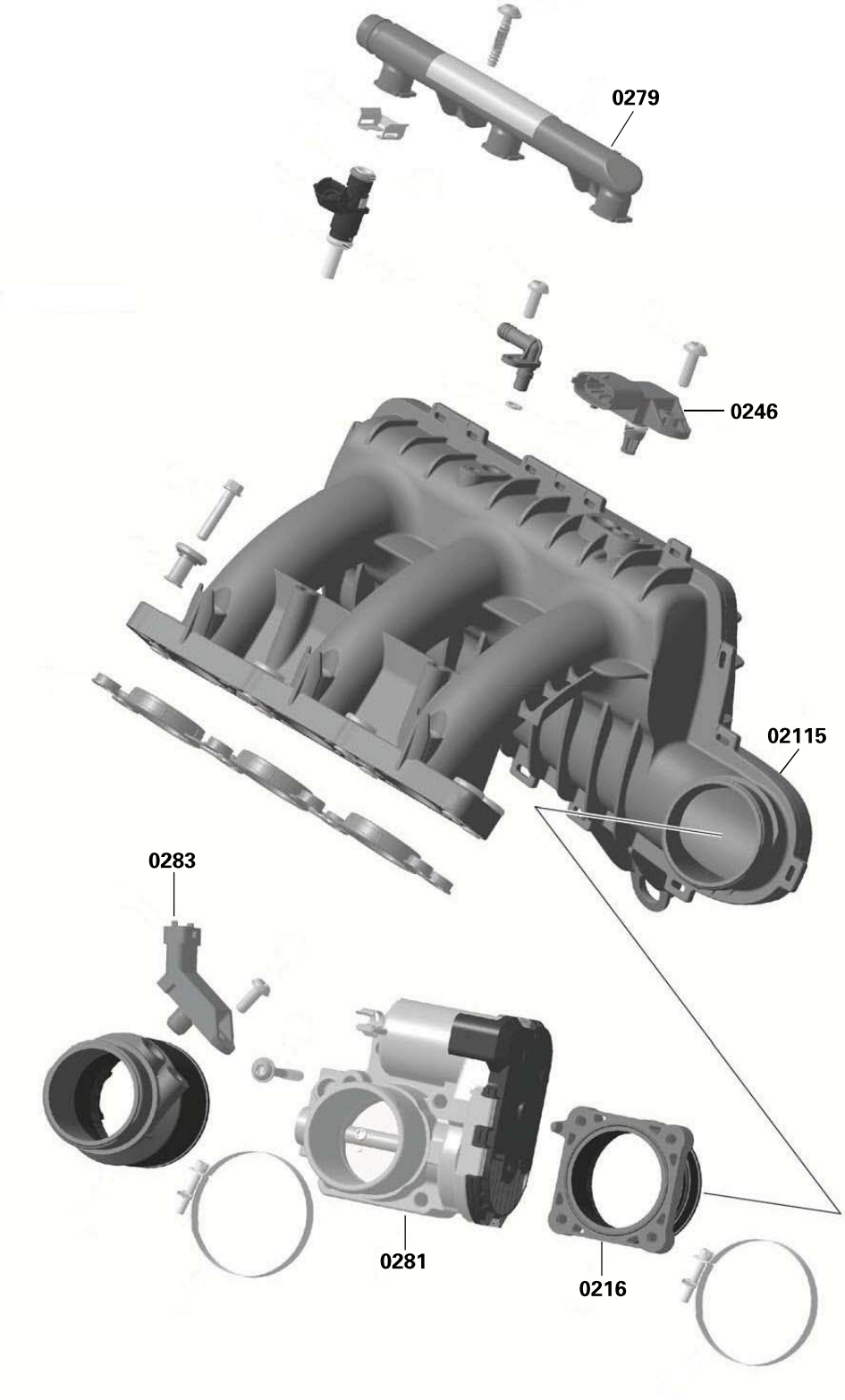

ttf2017-004-005

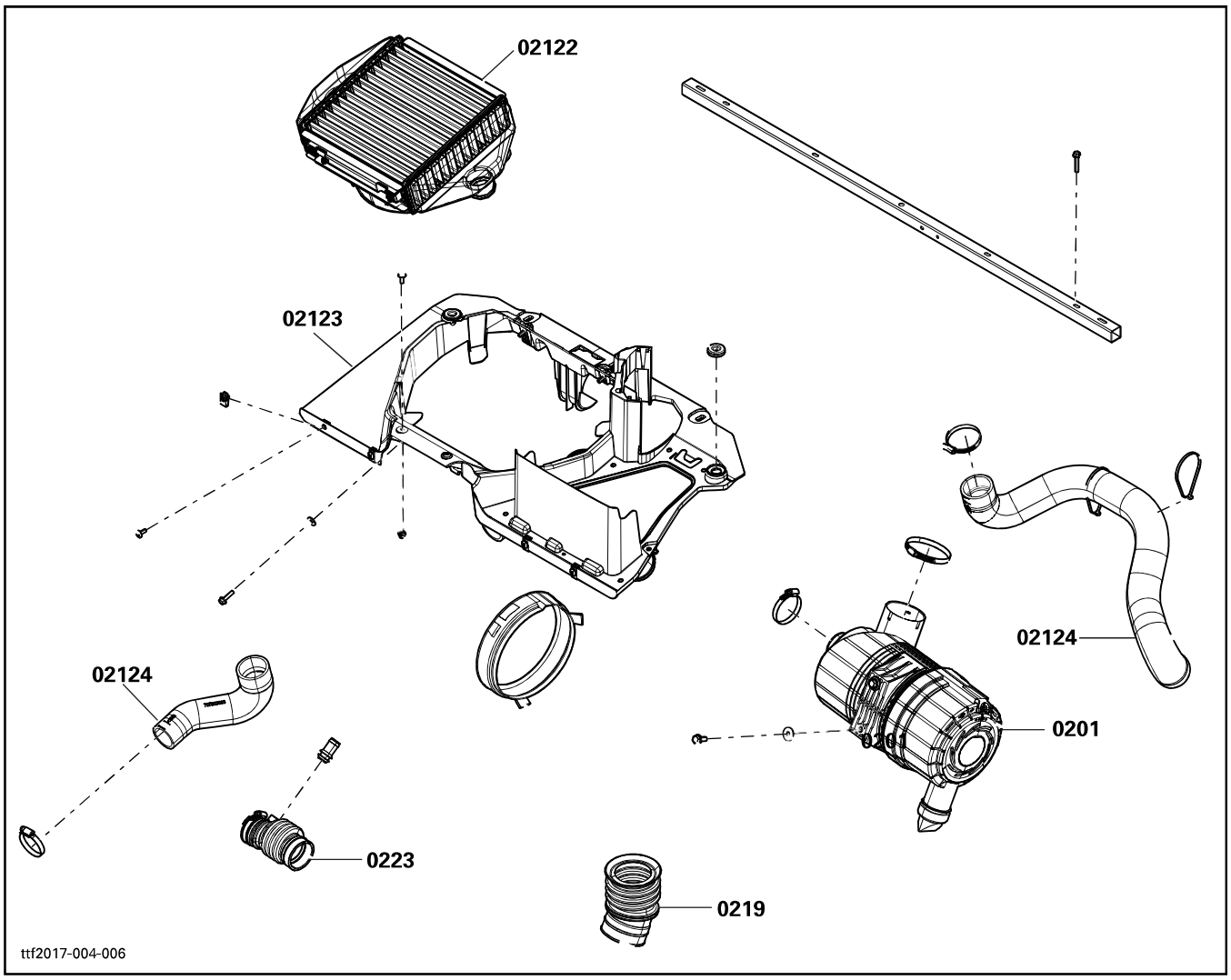
02122
02123
02124
02124
0201
0223
0219
ttf2017-004-006

SYSTEM SYSTÈME	CODE	DESCRIPTION	MAVERICK X3 15
03	**00**	**NO LABOR INVOLVED AUCUNE MAIN D'OEUVRE**	**0**
03	02	MAGNETO (ASS'Y) MAGNÉTO (COMPLET)	4.2
03	08	IGNITION COIL (EACH) BOBINE D'ALLUMAGE (CHAQUE)	0.4
03	23	SPARK PLUG (1) BOUGIE D'ALLUMAGE (1)	0.5
03	27	STATOR (ASS'Y) STATOR (COMPLET)	4.0
03	31	SPARK PLUG (2) BOUGIE D'ALLUMAGES (2)	0.6
03	32	MAGNETO COVER COUVERCLE DE MAGNETO	4.0
03	33	MAGNETO GASKET COVER JOINT D'ÉTANCHÉITÉ DU COUVERCLE DE MAGNETO	4.0
03	37	SPARK PLUG (3) BOUGIES D'ALLUMAGE (3)	0.6

SYSTEM SYSTÈME	CODE	DESCRIPTION	MAVERICK X3 15
04	**00**	**NO LABOUR INVOLVED AUCUNE MAIN-D'OEUVRE**	**0**
04	02	ELECTRIC STARTER (ASS'Y) DÉMARREUR (COMPLET)	0.4
04	03	STARTER RELAY SOLÉNOÏDE DE DÉMARRAGE	0.3
04	19	STARTER DRIVE LANCEUR DÉMARREUR	4.2

TRANSMISSION AND LINKAGE SYSTEM
SYSTÈME DE TRANSMISSION ET DE TRINGLERIE

SYSTEM SYSTÈME	CODE	DESCRIPTION	MAVERICK X3
			15
05	**00**	**NO LABOR INVOLVED AUCUNE MAIN-D'OEUVRE IMPLIQUÉE**	**0**
05	01	DRIVE PULLEY (ASS'Y) OR INNER HALF POULIE MOTRICE (COMPLET) OU DEMIE-POULIE	0.4
05	06	GOVERNOR CUP AND/OR FIXED HALF CUVETTE RÉGULATEUR ET/OU PARTIE FIXE POULIE	0.6
05	07	RAMPS AND/OR SCREWS RAMPES ET/OU VIS	0.8
05	08	SPRING COVER AND/OR SPRING AND/OR BUSHING COUVERCLE ET/OU RESSORT ET/OU DOUILLE POULIE	0.6
5	10	SLIDING HALF,BUSHING AND/OR LEVER ROLLER DEMI-POULIE COULISSANTE,DOUILLE ET/OU ROULEAU	1.0
05	11	DRIVEN PULLEY FIXED HALF DEMI-POULIE MENEE FIXE	0.7
05	12	DRIVEN PULLEY SLIDING HALF DEMI-POULIE MENÉE COULISSANTE	0.6
05	13	DRIVEN PULLEY CAM AND/OR SPRING CAME ET/OU RESSORT DE POULIE MENÉE	0.6
05	19	BELT COURROIE	0.3
05	55	LEVER BUTTON BOUTON DE LEVIER	0.3
05	56	LEVER (ASS'Y) AND/OR LEVER SPRING LEVIER (COMPLET) ET/OU RESSORT DE LEVIER	0.5
05	59	SPEED SENSOR CAPTEUR DE VITESSE	0.3
05	66	GEARSHIFT LEVER LEVIER D'EMBRAYAGE	0.3
05	78	CVT COVER COUVERCLE CVC	0.3
05	79	GASKET JOINT D'ÉTANCHÉITÉ	0.3
05	81	ONE WAY CLUTCH, FLANGE, RING, SPRING EMBRAYAGE À ROUE LIBRE, FLASQUE, ANNEAU, RESSORT	0.6
05	86	SLIDER SHOES GLISSIÈRES	0.6
05	89	REMOVE AND REPLACE TRANSMISSION ASS'Y REMPLACEMENT DE LA TRANSMISSION (COMPLET)	7.6
05	95	AIR INTAKE (CVT) ENTRÉE D'AIR (CVC)	0.3
05	96	AIR OUTLET (CVT) SORTIE D'AIR (CVC)	0.3

SYSTEM SYSTÈME	CODE	DESCRIPTION	MAVERICK X3 15
05	99	OUTPUT SHAFT ARBRE DE SORTIE	8.4
05	101	GEARS BOX (ASS'Y)/MAIN SHAFT BOÎTE D'ENGRENAGE (COMPLET)/ARBRE PRINCIPAL	8.5
05	102	SHIFT SHAFT (ASS'Y) ARBRE D'EMBRAYAGE (COMPLET)	8.5
05	104	INDEX LEVER (ASS'Y) LEVIER D'INDEXATION (COMPLET)	8.5
05	105	MAIN SHAFT SEAL JOINT D'ÉTANCHÉITÉ DE L'ARBRE PRINCIPAL	1.9
05	108	ACTUATOR AND/OR FORK AND/OR SEAL ACTUATEUR ET/OU FOURCHETTE ET/OU JOINT D'ÉTANCHÉITÉ	1.1
05	109	FORK AND/OR PIN FOURCHETTE ET/OU GOUPILLE	8.4
05	113	SHIFTING SWITCH INTERRUPTEUR D'EMBRAYAGE	0.3
05	114	SHIFT SHAFT SEAL ANNEAU D'ÉTANCHEITÉ DU LEVIER D'EMBRAYAGE	0.4
05	115	CVT AIR GUIDE AND/OR O-RINGS GUIDE D'AÉRATION ET/OU JOINT D'ÉTANCHÉITÉ	1.0
05	120	GEARBOX POSITION SENSOR CAPTEUR DE POSITION D'ENGRENAGE	0.3
05	159	PRIMARY INLET AND/OR ADAPTER ENTRÉE PRIMAIRE ET/OU ADAPTATEUR	0.3
05	160	FILTER FILTRE	0.3
05	161	SHIFTING CABLE CÂBLE D'EMBRAYAGE	1.0
05	164	COUNTERSHAFT SEAL ANNEAU D'ÉTANCHÉITÉ DE L'ARBRE DE RENVOI	1.2
05	187	FAN VENTILATEUR	0.5
05	203	DRIVE SHAFT, ENGINE SUPPORT AND BEARINGS ARBRE ENTRAINEMENT, SUPPORT MOTEUR ET ROULEMENTS	8.0
05	204	ENGINE SUPPORT (RIGHT SIDE) SUPPORT MOTEUR (COTÉ DROIT)	3.0
05	205	TRANSMISSION DIPSTICK JAUGE DE TRANSMISSION	0.3

TRANSMISSION AND LINKAGE SYSTEM
SYSTÈME DE TRANSMISSION ET DE TRINGLERIE

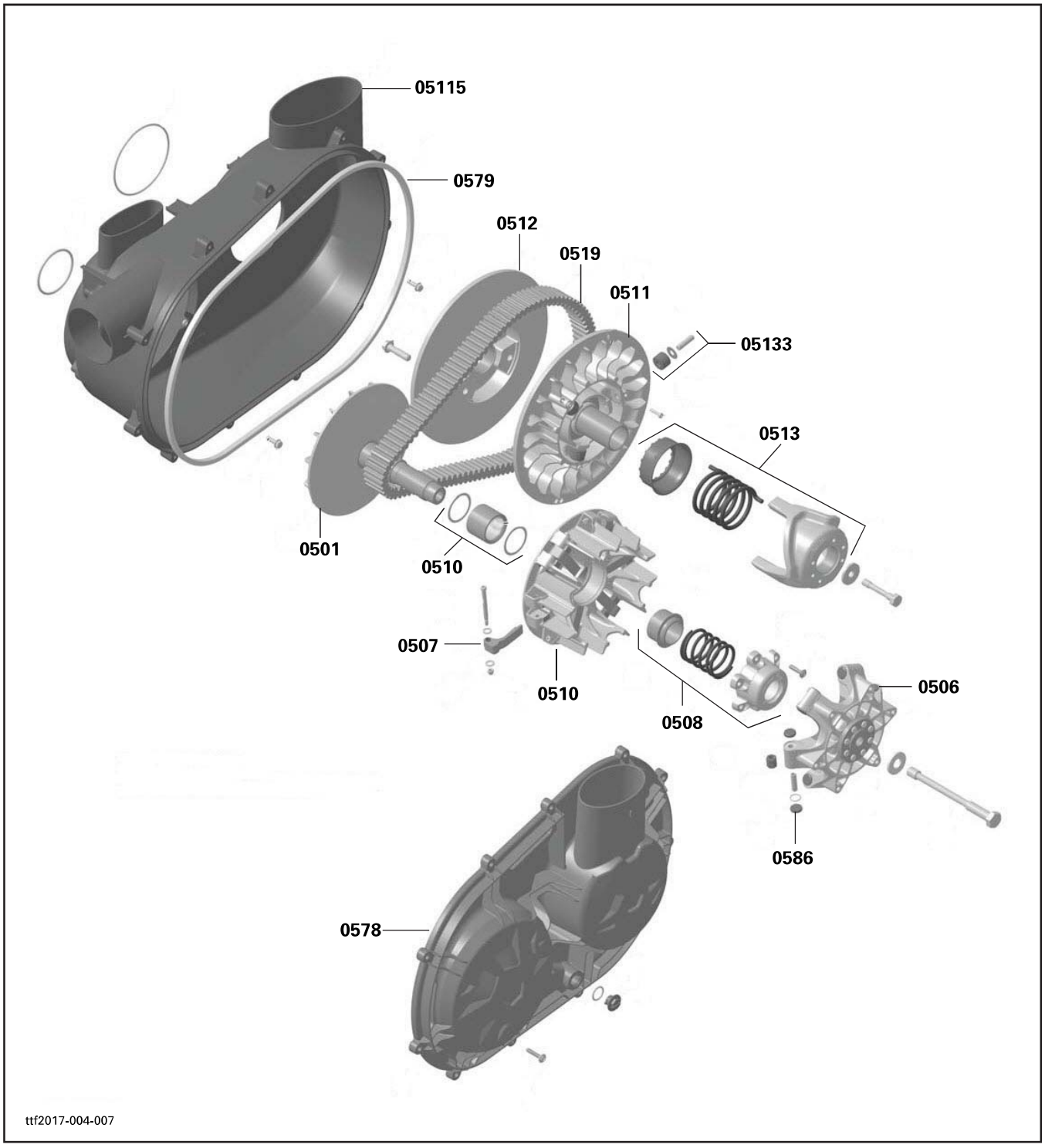

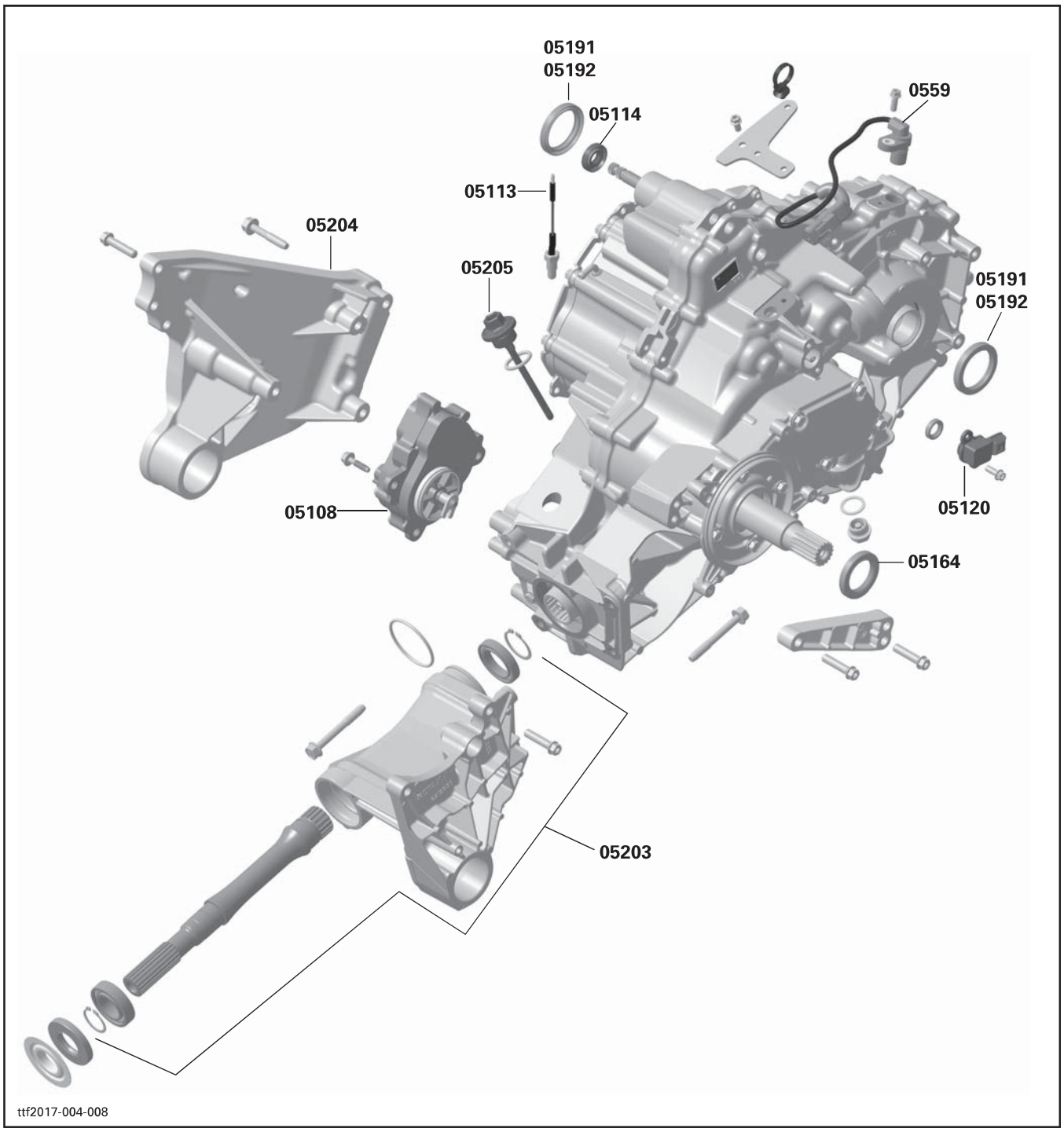
05191
05192
05114
0559
05113
05204
05205
05191
05192
05108
05120
05164
05203
ttf2017-004-008

TRANSMISSION AND LINKAGE SYSTEM
SYSTÈME DE TRANSMISSION ET DE TRINGLERIE

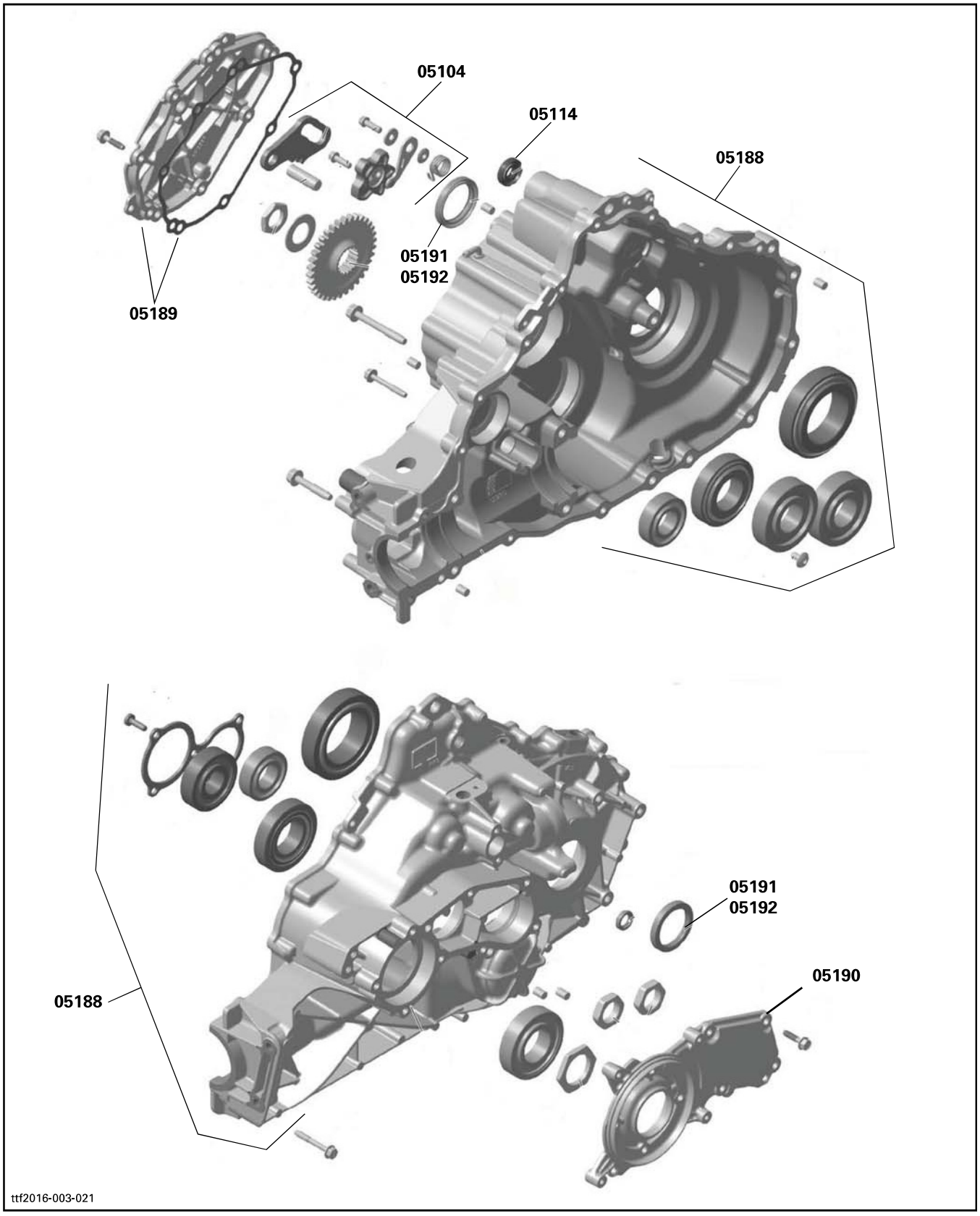

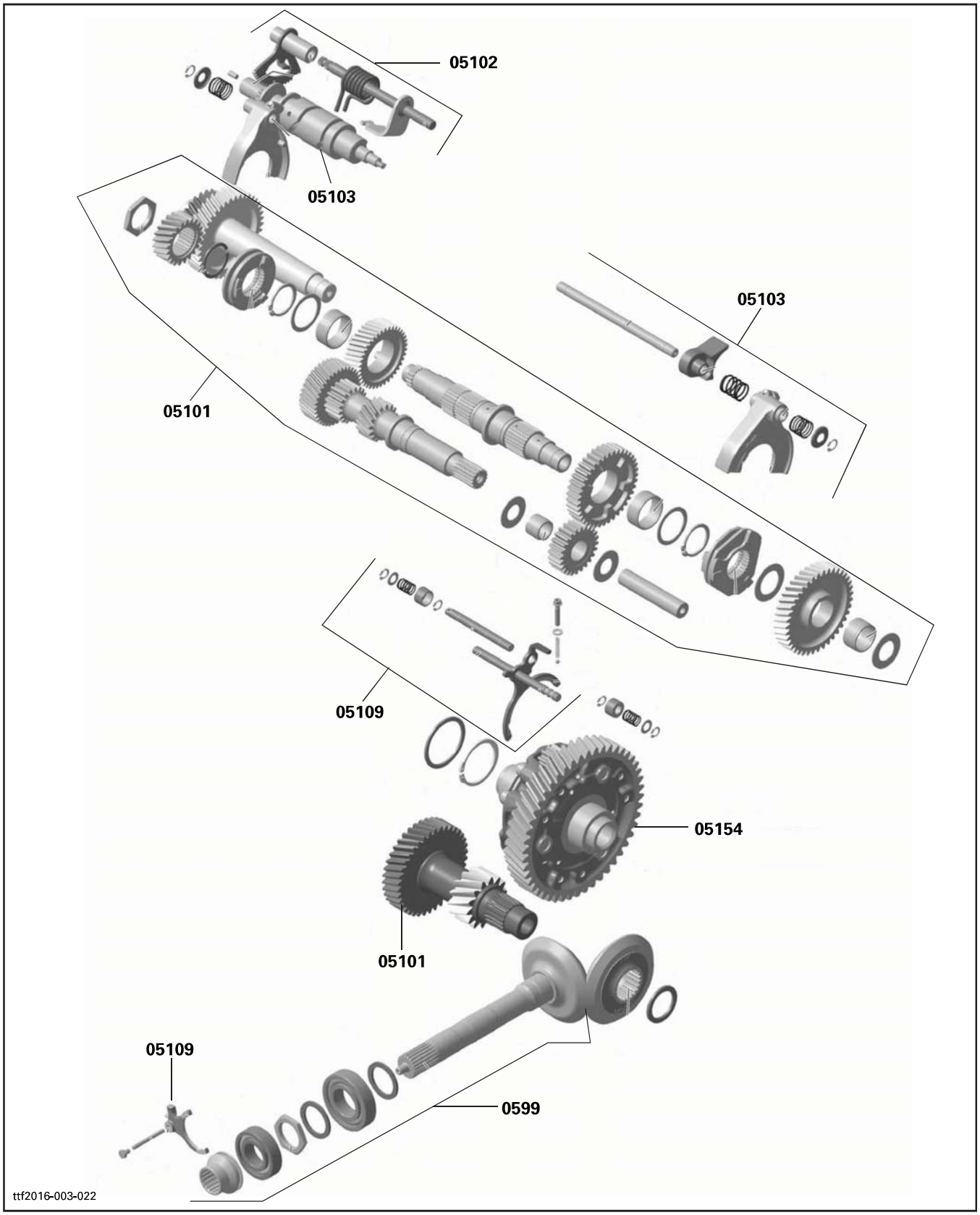
05102
05103
05103
05101
05109
05154
05101
05109
0599
ttf2016-003-022

TRANSMISSION AND LINKAGE SYSTEM
SYSTÈME DE TRANSMISSION ET DE TRINGLERIE

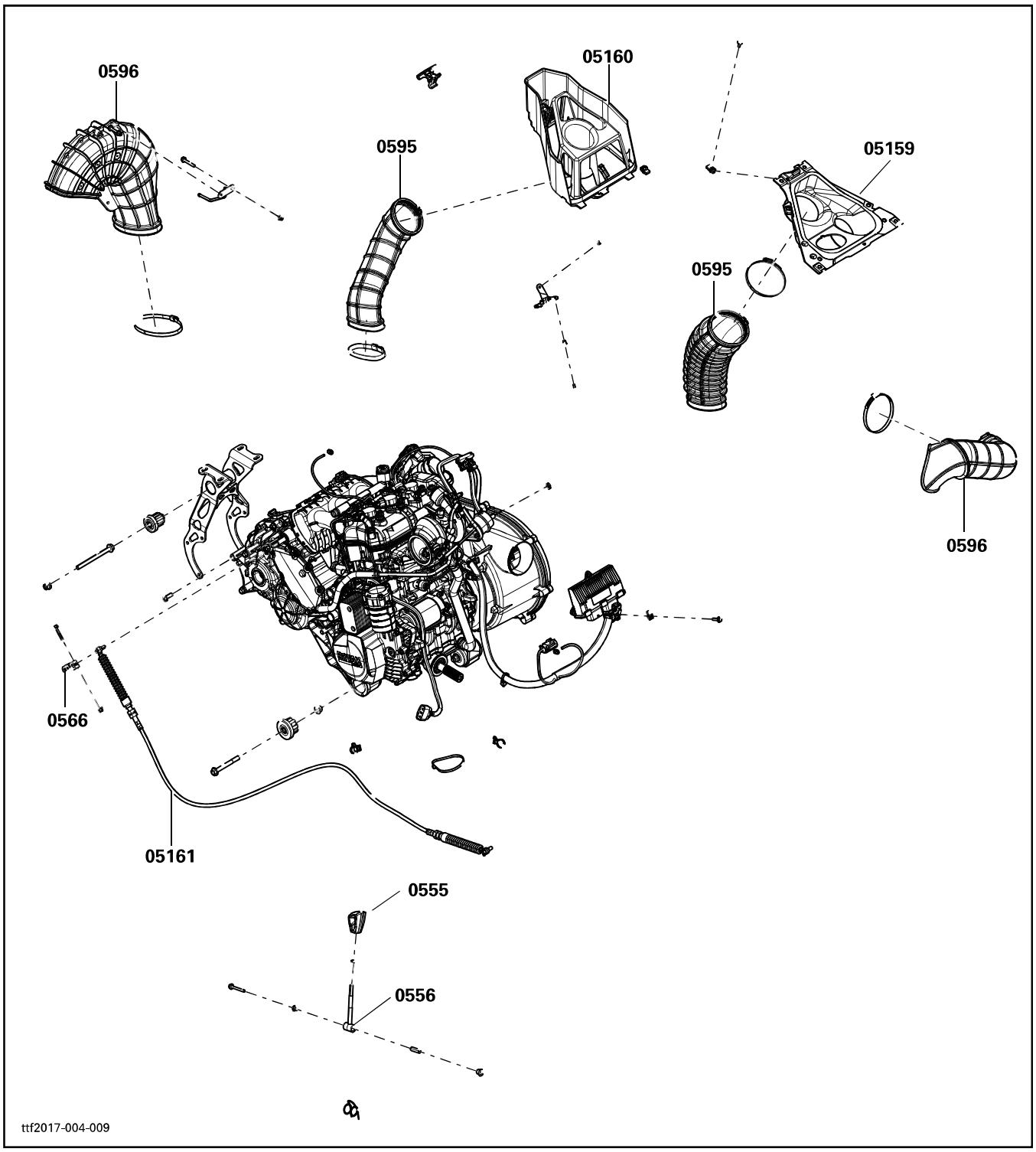

SYSTEM SYSTÈME	CODE	DESCRIPTION	MAVERICK X3 15
06	**00**	**NO LABOR INVOLVED AUCUNE MAIN-D'OEUVRE**	**0**
06	06	MASTER CYLINDER MAÎTRE-CYLINDRE	1.0
06	09	FRONT CALIPER (RH OR LH) ÉTRIER AVANT (DROIT OU GAUCHE)	0.5
06	10	FRONT BRAKE PAD (RH OR LH) PLAQUETTE DE FREIN AVANT (DROIT OU GAUCHE)	0.3
06	11	FRONT BRAKE DISC (RH OR LH) DISQUE DE FREIN AVANT (DROIT OU GAUCHE)	0.5
06	12	FRONT FLEXIBLE BRAKE HOSE BOYAU FLEXIBLE DE FREIN AVANT	1.0
06	19	BRAKE SWITCH INTERRUPTEUR DE FREIN	0.3
06	25	REAR BRAKE HOSE BOYAU DE FREIN ARRIÈRE	1.6
06	26	REAR CALIPER ÉTRIER ARRIÈRE	0.5
06	27	REAR BRAKE PAD PLAQUETTE DE FREIN ARRIÈRE	0.3
06	28	REAR BRAKE DISC DISQUE DE FREIN ARRIÈRE	0.5
06	34	MASTER CYLINDER RESERVOIR RÉSERVOIR DU MAÎTRE-CYLINDRE	0.3
06	35	BRAKE PEDAL PÉDALE DE FREIN	0.5

BRAKE SYSTEM
SYSTÈME DE FREIN

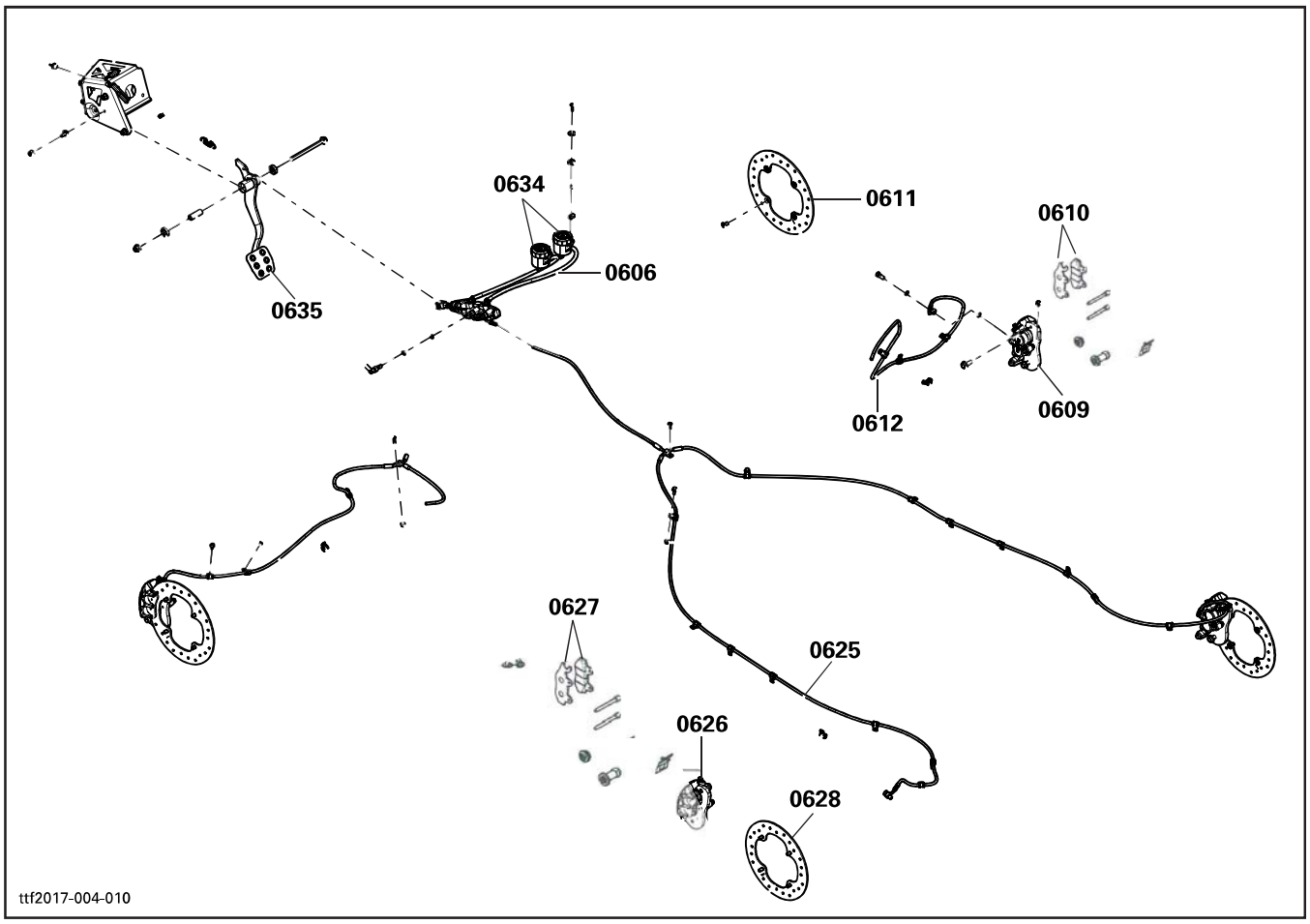

SYSTEM SYSTÈME	CODE	DESCRIPTION	MAVERICK X3 15
07	00	**NO LABOR INVOLVED** **AUCUNE MAIN-D'OEUVRE**	0
07	13	EXTERNAL BALL JOINT (RH OR LH) JOINT À ROTULE EXTERNE (DROIT OU GAUCHE)	0.8
07	24	MAIN TUBE TUBE PRINCIPAL	1.1
07	32	LOWER ARM AND/OR BALL JOINT (RH OR LH) BRAS INFÉRIEUR ET/OU JOINT À ROTULE (DROIT OU GAUCHE)	0.7
07	33	UPPER ARM (RH OR LH) BRAS DE SUSPENSION SUPÉRIEUR (DROIT OU GAUCHE)	0.7
07	37	FRONT SHOCK AND/OR SPRING AND/OR STOPPER AND/OR PROTECTOR AND/OR SEAT (RH OR LH) AMORTISSEUR AVANT ET/OU RESSORT ET/OU BUTÉE ET/OU SIÈGE ET/OU PROTECTEUR (DROIT OU GAUCHE)	0.5
07	39	SABILIZER BAR BARRE STABILISATRICE	0.5
07	40	FRONT DIFFERENTIEL (ASS'Y) DIFFÉRENTIEL AVANT (COMPLET)	2.3
07	42	FRONT PROPELLER SHAFT (ASS'Y) ARBRE DE PROPULSION AVANT (COMPLET)	1.2
07	45	CV JOINT (RH OR LH) JOINT HOMOCINÉTIQUE (DROIT OU GAUCHE)	0.7
07	46	FRONT WHEEL HUB (SEAL AND/OR BEARING) (RH OR LH) MOYEU DE ROUE AVANT (JOINT ET/OU ROULEMENT) (DROIT OU GAUCHE)	0.5
07	47	KNUCKLE (RH OR LH) PORTE-FUSÉE (DROIT OU GAUCHE)	0.7
07	50	FRONT RIM AND/OR TIRE JANTE AVANT ET/OU PNEU	0.4
07	72	INTERNAL BUSHING AND/OR CUSHION (LOWER AND/OR UPPER ARM) (RH OR LH) DOUILLE INTERNE ET/OU COUSSIN (BRAS INFÉRIEUR ET/OU SUPÉRIEUR) (DROIT OU GAUCHE)	0.4
07	82	BALL BEARING ROULEMENT À BILLE	0.5
07	85	RING GEAR AND/OR CARRIER AND/OR SHIM COURONNE DE LANCEMENT ET/OU SUPPORT ET/OU CALE	2.8
07	88	RING GEAR DRIVE GEAR AND/OR BEARING AND/OR SHIM PIGNON DE COMMANDE DE LA COURONNE ET/OU ROULEMENT À BILLE ET/OU CALE	2.8
07	89	COVER AND/OR PINION COVER AND/OR SEAL AND/OR BEARING COUVERCLE ET/OU COUVERCLE DE PIGNON ET/OU JOINT D'ÉTANCHÉITÉ ET/OU ROULEMENT À BILLE	3.1
07	90	BOOT WHEEL KIT AND/OR CV JOINT (RH OR LH) ENSEMBLE DE SOUFFLET DE ROUE ET/OU JOINT CV (DROIT OU GAUCHE)	0.8
07	91	BOOT DIFFERENTIAL KIT AND/OR PLUNGING JOINT (RH OR LH) ENSEMBLE DE SOUFFLET DE DIFFÉRENTIEL ET/OU JOINT PLONGEANT (DROIT OU GAUCHE)	0.8
07	94	UNIT PACK KIT ENSEMBLE JOINT CARDAN	1.5

STEERING - FRONT DRIVE SYSTEM AND SUSPENSION
DIRECTION - SYSTÈME D'ENTRAÎNEMENT AVANT ET SUSPENSION

SYSTEM SYSTÈME	CODE	DESCRIPTION	MAVERICK X3 15
07	95	UNIT PACKS KIT (2) ENSEMBLE JOINTS CADRANS (2)	1.7
07	99	POWER STEERING SERVODIRECTION	1.5
07	103	DIFFERENTIAL SEAL (1) JOINT D'ÉTANCHÉITÉ DU DIFFÉRENTIEL (1)	0.7
07	104	DIFFERENTIAL SEALS (2) JOINTS D'ÉTANCHÉITÉ DU DIFFÉRENTIEL (2)	1.4
07	106	STEERING COLUMN SUPPORT AND/OR BUSHINGS SUPPORT DE COLONNE DE DIRECTION ET/OU COUSSINETS	0.8
07	110	BELLOW SOUFFLET	0.3
07	115	RACK AND PINION STEERING DIRECTION À CRÉMAILLÈRE	1.8
07	116	STEERING SHAFT ARBRE DU VOLANT	0.9
07	117	ADJUSTMENT CYLINDER CYLINDRE D'AJUSTEMENT	0.3
07	118	STEERING WHEEL VOLANT	0.3
07	120	DIFFERENTIAL OIL SEAL ANNEAU D'ÉTANCHÉITÉ DU DIFFÉRENTIEL	1.5
07	122	HOSE (DIFFERENTIAL HOSE) BOYAU (BOYAU DU DIFFÉRENTIEL)	0.3
07	130	PROPELLER SHAFT EXTENSION (ASS'Y) EXTENSION D'ARBRE DE PROPULSION (COMPLET)	1.2

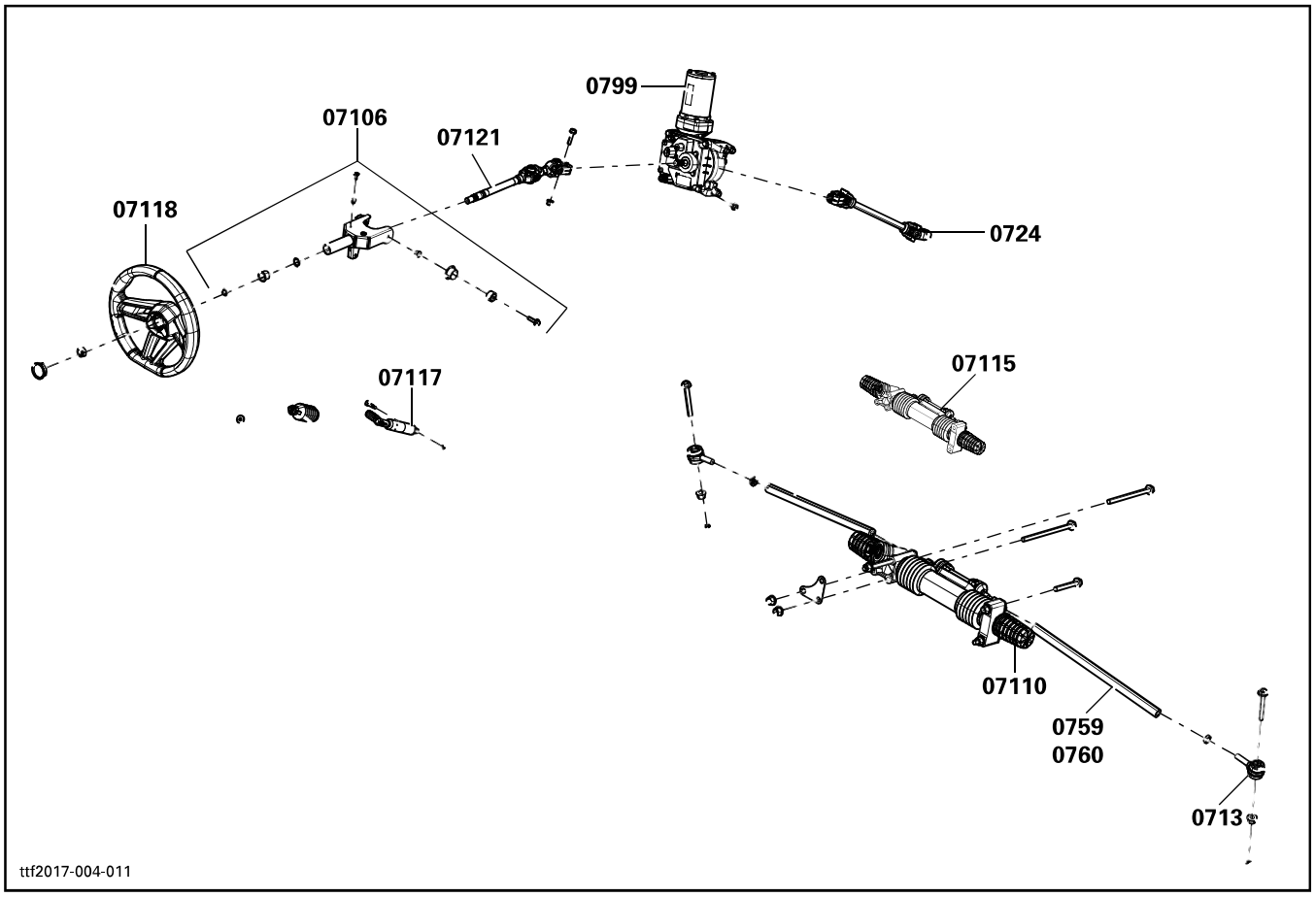
0799
07106
07121
07118
0724
07115
07117
07110
0759
0760
0713
ttf2017-004-011

STEERING - FRONT DRIVE SYSTEM AND SUSPENSION
DIRECTION - SYSTÈME D'ENTRAÎNEMENT AVANT ET SUSPENSION

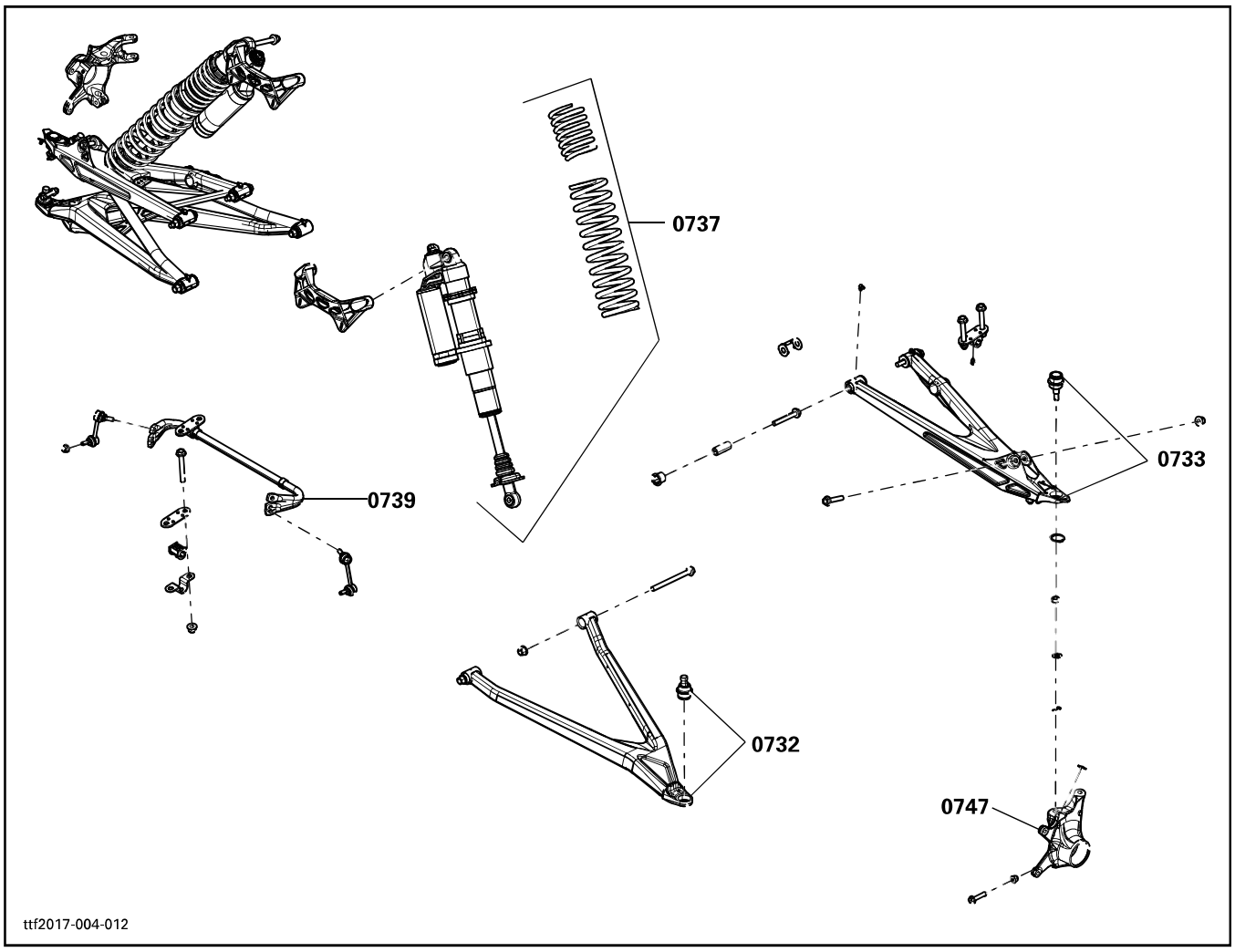

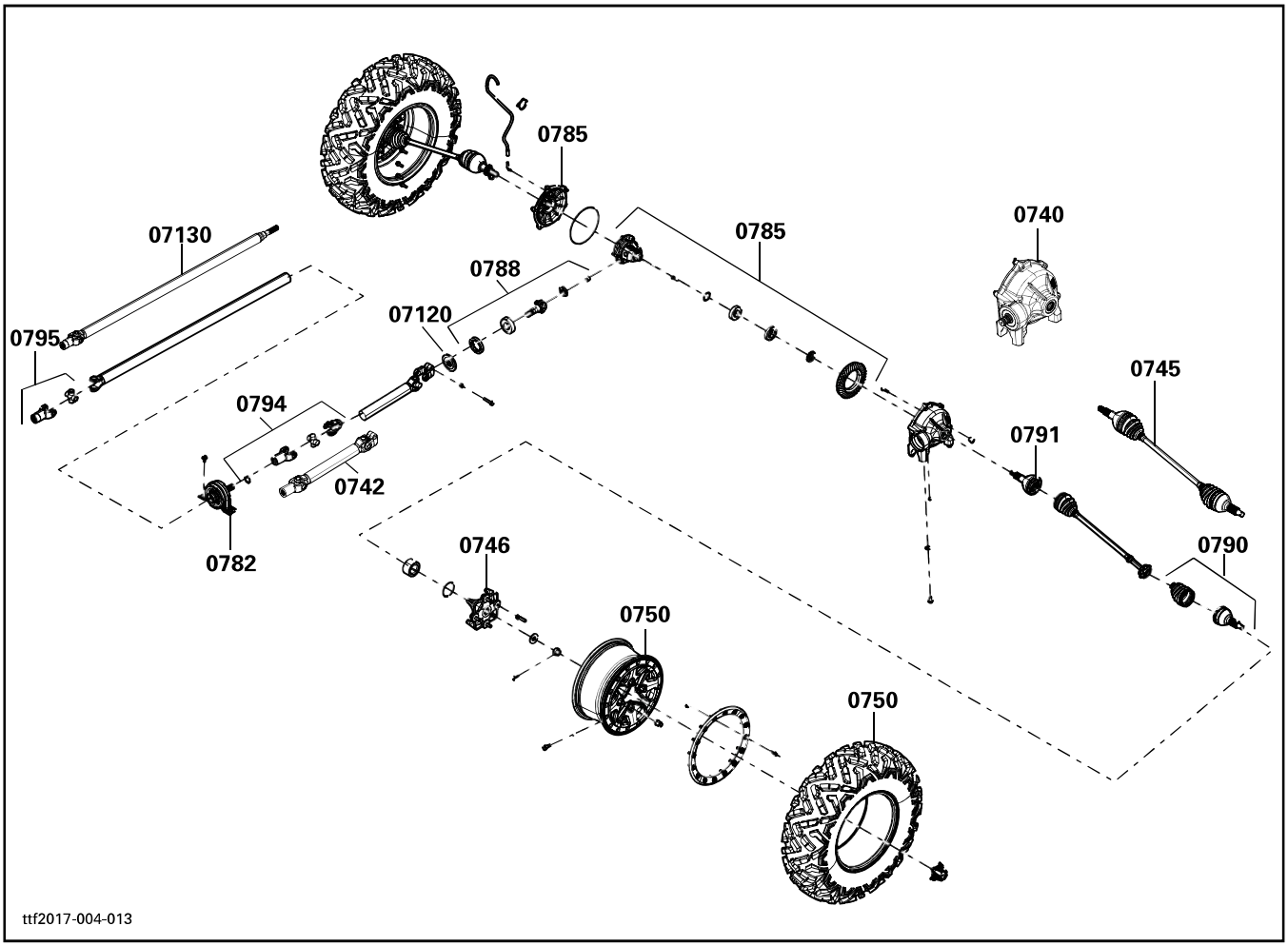
0785
07130
0785
0740
0788
07120
0795
0745
0794
0791
0742
0782
0746
0790
0750
0750
ttf2017-004-013

REAR DRIVE SYSTEM AND SUSPENSION
SYSTÈME D'ENTRAÎNEMENT ARRIÈRE ET SUSPENSION

SYSTEM SYSTÈME	CODE	DESCRIPTION	MAVERICK X3
			15
08	**00**	**NO LABOR INVOLVED AUCUNE MAIN D'OEUVRE**	**0**
08	05	REAR WHEEL HUB (RH) MOYEU DE ROUE ARRIÈRE (DROIT)	0.3
08	62	SWING ARM BRAS OSCILLANT	1.0
08	109	REAR WHEEL HUB (LH) MOYEU DE ROUE ARRIÈRE (GAUCHE)	0.3
08	111	REAR SHOCK (RH OR LH) AMORTISSEUR ARRIÈRE (DROIT OU GAUCHE)	0.5
08	114	REAR RIM AND/OR TIRE JANTE ARRIÈRE ET/OU PNEU	0.4
08	120	CV JOINT (RH OR LH) JOINT HOMOCINÉTIQUE (DROIT OU GAUCHE)	0.7
08	121	STABILIZER BAR BARRE STABILISATRICE	0.6
08	125	BOOT WHEEL KIT AND/OR CV JOINT (RH OR LH) ENSEMBLE DE SOUFFLET DE ROUE ET/OU JOINT CV (DROIT OU GAUCHE)	0.8
08	126	BOOT DIFFERENTIAL KIT AND/OR PLUNGING JOINT (RH OR LH) ENSEMBLE DE SOUFFLET DE DIFFÉRENTIEL ET/OU JOINT PLONGENT (DROIT OU GAUCHE)	0.8
08	127	RADIAL BALL BEARINGS ROULEMENTS À BILLE RADIALES	0.9
08	128	UNIT PACK KIT ENSSEMBLE JOINT CADRAN	1.8
08	129	UNIT PACKS KIT (2) ENSSEMBLE JOINTS CARDANS (2)	2.0
08	142	TIE ROD BARRE ACCOUPLEMENT	0.3
08	170	BALL JOINT JOINT ROTULE	0.3
08	171	SWAY BAR LEVER LEVIER BARRE STABILISATRICE	0.3
08	172	KNUCKLE (RIGHT OR LEFT) PORTE FUSÉE (DROIT OU GAUCHE)	0.7

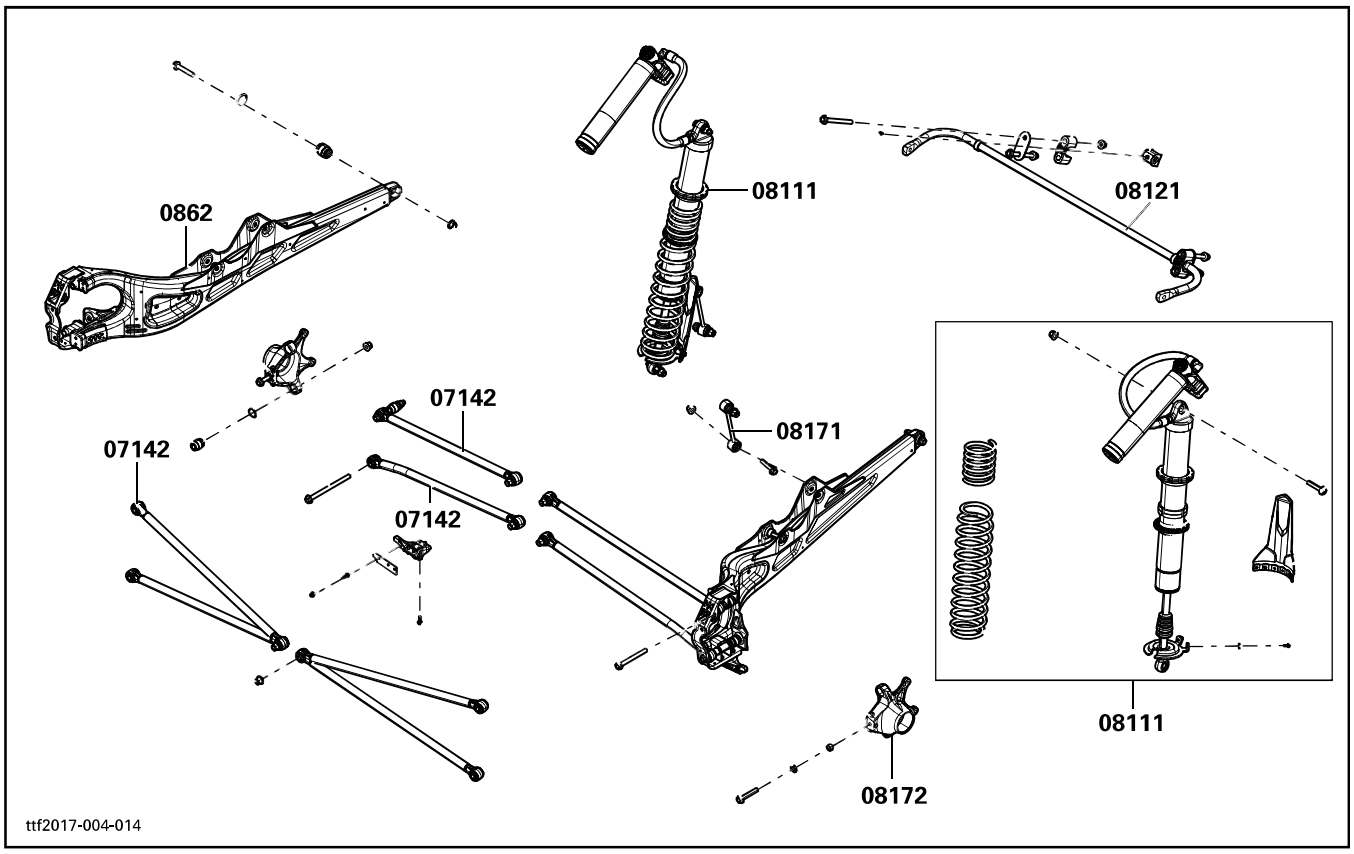
0862
08111
08121
07142
07142
07142
08171
08111
08172
ttf2017-004-014

REAR DRIVE SYSTEM AND SUSPENSION
SYSTÈME D'ENTRAÎNEMENT ARRIÈRE ET SUSPENSION

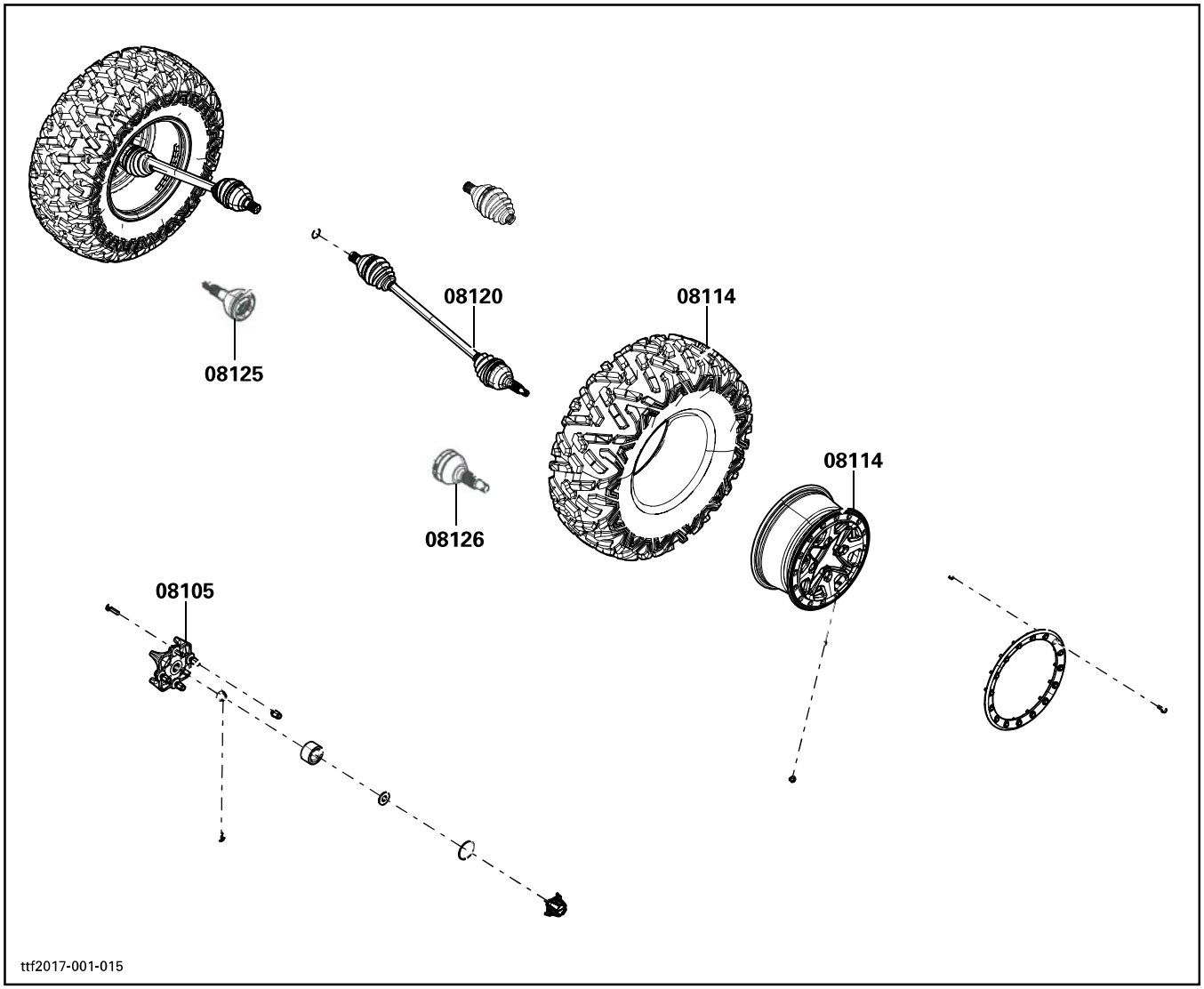

SYSTEM SYSTÈME	CODE	DESCRIPTION	MAVERICK X3 15
09	00	**NO LABOR INVOLVED AUCUNE MAIN D'OEUVRE IMPLIQUÉE**	0
09	13	LUGGAGE RACK KIT ENSEMBLE PORTE-BAGAGE	0.9
09	17	CONSOLE CONSOLE	0.3
09	26	FRONT BUMPER PARE-CHOCS AVANT	0.7
09	28	FRONT FASCIA FASCIA AVANT	0.5
09	*49	FRAME CHASSIS	24.0
09	57	FRONT FENDER AND/OR SUPPORT (RH OR LH) AILE AVANT ET/OU SUPPORT (DROIT OU GAUCHE)	0.3
09	65	MIRROR RETROVISEUR	0.3
09	95	EACH DECAL (1) CHAQUE AUTOCOLLANT (1)	0.3
09	110	SEAT AND/OR BACKREST SIÈGE ET/OU DOSSIER	0.3
09	111	SEAT BASE ASS'Y BASE DE SIÈGE COMPLET	0.3
09	120	FRONT LIGHT FASCIA FASCIA DE LUMIÈRE AVANT	0.3
09	168	FRONT GRILL GRILLE FRONTALE	0.3
09	227	SERVICE COVER COUVERCLE DE SERVICE	0.3
09	231	REAR PANEL (LEFT OR RIGHT) PANNEAU ARRIÈRE (GAUCHE OU DROIT)	0.4
09	239	MIDDLE SIDE PANEL (LEFT OR RIGHT) PANNEAU LATÉRAL CENTRAL (GAUCHE OU DROIT)	0.6
09	244	CONSOLE SUPPORT SUPPORT DE CONSOLE	0.3
09	280	LOWER MOULDING (RH OR LH) ENJOLIVEUR INFÉRIEUR (DR OU GA)	0.3
09	289	GLOVES BOX BOÎTE À GANTS	0.3
09	290	DASHBOARD TABLEAU DE BORD	1.1
09	306	REAR SIDE PANEL (RIGHT OR LEFT) PANNEAU LATÉRAL ARRIÈRE (DROIT OU GAUCHE)	0.3

SYSTEM SYSTÈME	CODE	DESCRIPTION	MAVERICK X3 15
09	336	CENTRAL SKID PLATE PLAQUE DE PROTECTION CENTRALE	0.6
09	337	REAR SKID PLATE PLAQUE DE PROTECTION ARRIÈRE	0.6
09	338	AIR INLET COVER COUVERCLE D'ADMISSION D'AIR	0.3
09	339	FLOOR PANEL (LEFT) PANNEAU DE PLANCHER (GAUCHE)	0.4
09	340	FLOOR PANEL (RIGHT) PANNEAU DE PLANCHER (DROIT)	1.1
09	341	FRONT BULKHEAD (LEFT) CLOISON AVANT (GAUCHE)	1.1
09	342	FRONT BULKHEAD (RIGHT) CLOISON AVANT (DROITE)	0.8
09	343	REAR BULKHEAD (LEFT) CLOISON ARRIÈRE (GAUCHE)	0.4
09	344	REAR BULKHEAD (RIGHT) CLOISON ARRIÈRE (DROITE)	0.4
09	345	LATERAL CONSOLE PANEL (LEFT) PANNEAU LATÉRAL DE CONSOLE (GAUCHE)	0.3
09	346	LATERAL CONSOLE PANEL (RIGHT) PANNEAU LATÉRAL DE CONSOLE (DROIT)	0.3
09	347	FIXE CONSOLE PANEL (LEFT) PANNEAU FIXE DE CONSOLE (GAUCHE)	0.6
09	349	LEVER INDICATOR INDICATEUR DE VITESSE	0.3
09	364	HEAD REST APPUI-TÊTE	0.3
09	365	SAFETY BELT CEINTURE DE SÉCURITÉ	0.3
09	366	BUCKLE BELT VERROU CEINTURE	0.3
09	368	HANDHOLD (LEFT) POIGNÉE DE MAINTIEN (GAUCHE)	0.3
09	385	CAGE KIT ENSEMBLE DE CAGE	3.4
09	386	ROOF TOIT	0.3
09	400	CENTER HOOD CAPOT CENTRAL	0.5
09	406	FRONT CONSOLE CONSOLE AVANT	0.3

SYSTEM SYSTÈME	CODE	DESCRIPTION	MAVERICK X3 15
09	409	DASH BOARD PANEL (RIGHT OR LEFT) PANNEAU DE TABLEAU DE BORD (DROIT OU GAUCHE)	0.4
09	434	CENTER CAGE KIT ENSEMBLE DE CAGE CENTRALE	0.3
09	441	INTERCOOLER AIR SCOOP PRISE D'ADMISSION D'AIR DU REFROIDISSEUR	0.3
09	446	LATERAL CAGE LEG (RH OR LH) MONTANT DE CAGE LATERAL (DROIT OU GAUCHE)	0.3
09	454	REAR FENDER MOULDING ENJOLIVEUR D'AILE ARRIERE	0.5
09	480	FRONT LATERAL PANEL PANNEAU LATERAL AVANT	0.4
09	481	UPPER DASH TABLEAU DE BORD SUPERIEUR	1.1
09	483	LOWER DASH (RIGHT) TABLEAU DE BORD INFERIEUR (DROIT)	0.3
09	484	LOWER DASH (LEFT) TABLEAU DE BORD INFERIEUR (GAUCHE)	0.4
09	485	FRONT BULKHEAD COVER COUVERCLE DE CLOISON AVANT	0.6
09	487	REAR LOWER BULKHEAD CLOISON INFERIEUR ARRIERE	2.2
09	490	REAR SERVICE COVER COUVERCLE DE SERVICE ARRIERE	0.3
09	496	UPPER FRONT DEFLECTOR DEFLECTEUR AVANT SUPERIEUR	0.3
09	506	OUTSIDE DOOR PANEL PANNEAU DE PORTE EXTERIEUR	0.3
09	511	DOOR FRAME (ASS'Y) CHASSIS DE PORTE (COMPLET)	0.4
09	521	CAGE COVER ENJOLIVEUR DE CAGE	0.3
09	522	REAR FASCIA CARENAGE ARRIERE	0.3
09	523	REAR LATERAL COVER COUVERCLE LATERAL ARRIERE	0.3
09	524	FASCIA COVER COUVERCLE DE CARENAGE	0.3
09	525	FUEL TANK CAP COVER COUVERCLE DU BOUCHON RESERVOIR ESSENCE	0.3
09	526	REAR BULKHEAD CAP CAPUCHON DE CLOISON ARRIÈRE	0.3

SYSTEM SYSTÈME	CODE	DESCRIPTION	MAVERICK X3
			15
09	527	HOSE SUPPORT SUPPORT DE TUYAU	1.5
09	528	BELT BAR BARRE DE CEINTURE	0.5
09	529	TROLLEY AND RAILS CHARIOT ET RAILS	0.4

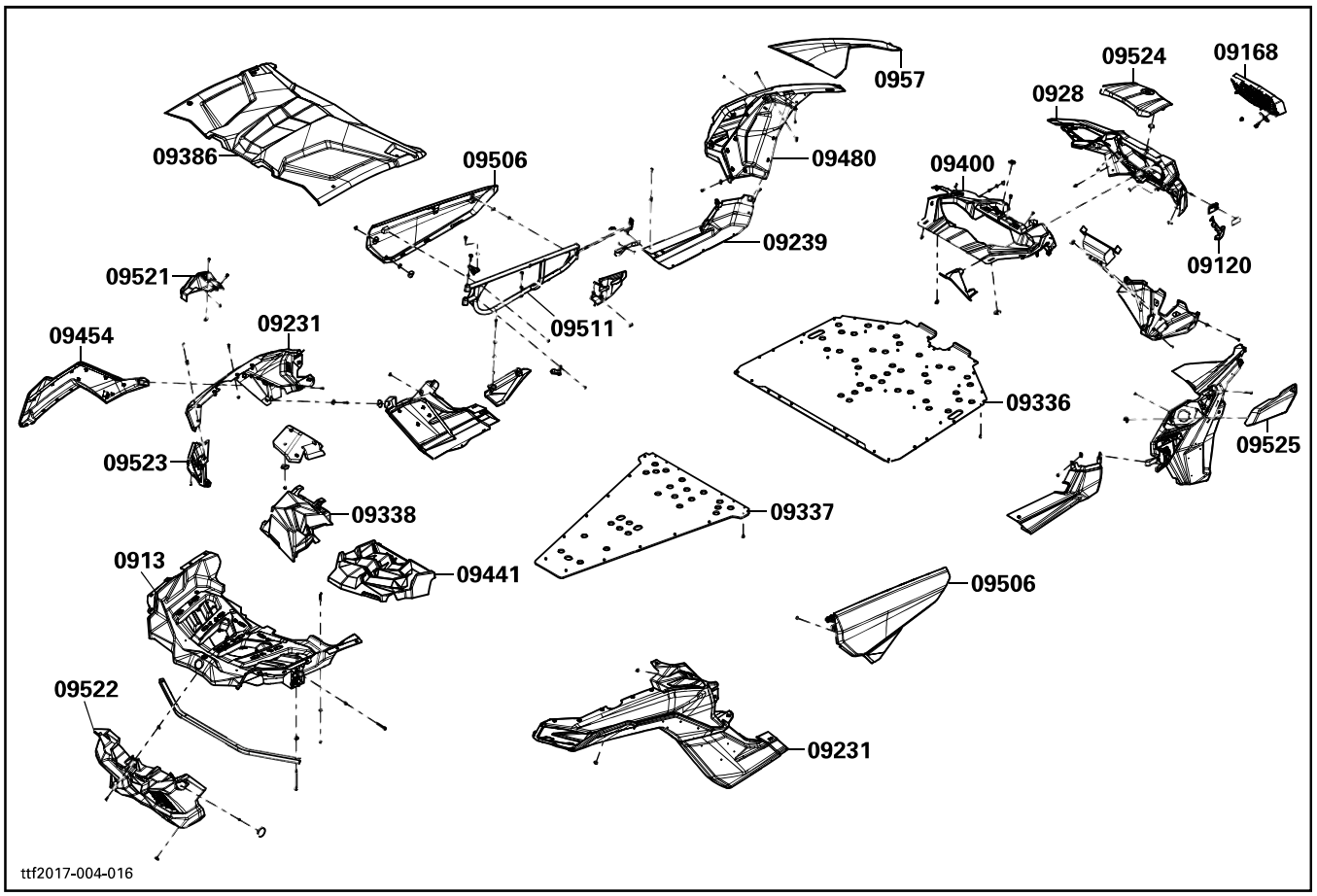
09386
09506
0957
09480
09524
09168
0928
09400
09239
09120
09521
09511
09454
09231
09336
09523
09525
09338
09337
0913
09441
09506
09522
09231
ttf2017-004-016

BODY AND ACCESSORIES
CARROSSERIE ET ACCESSOIRES

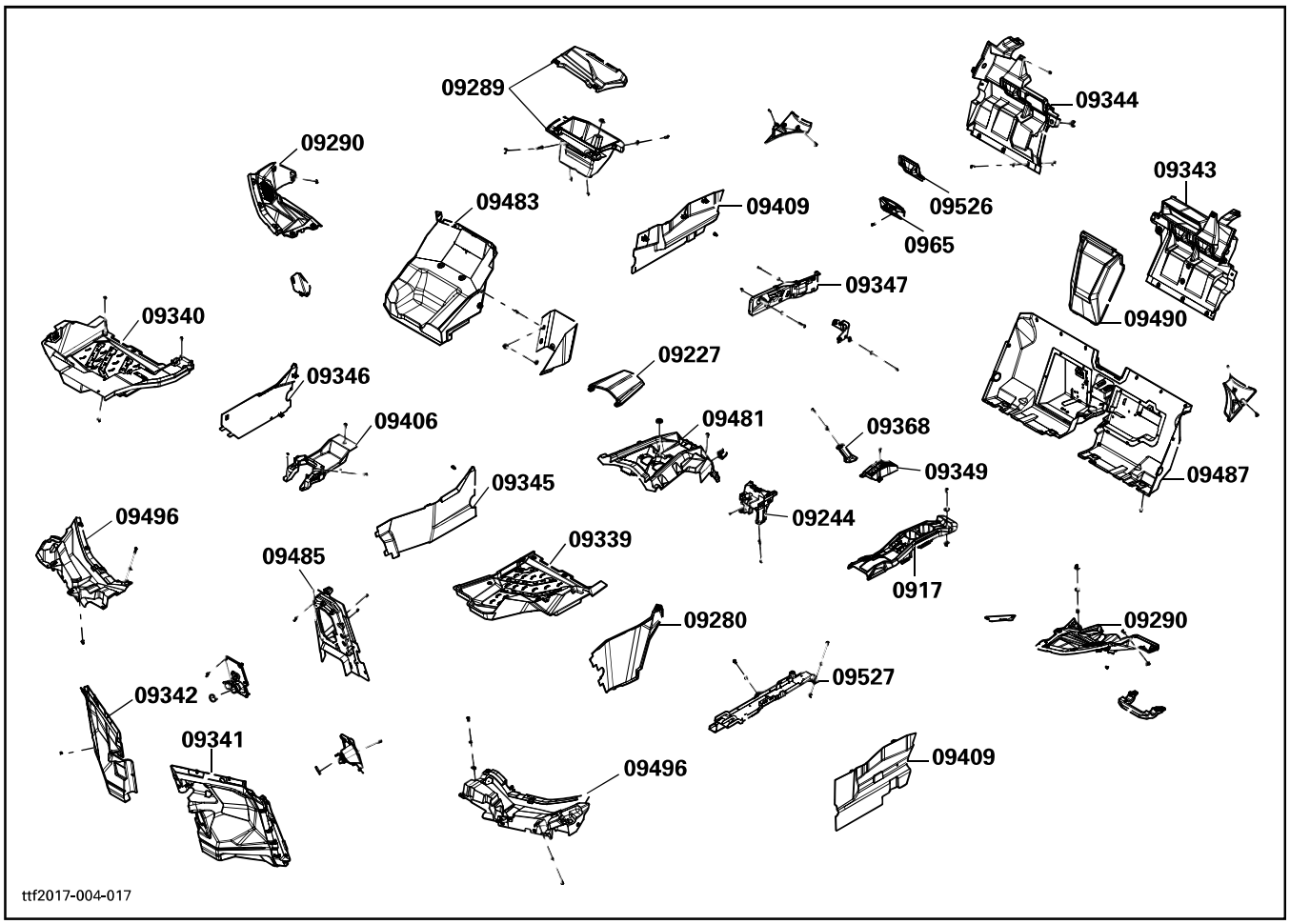

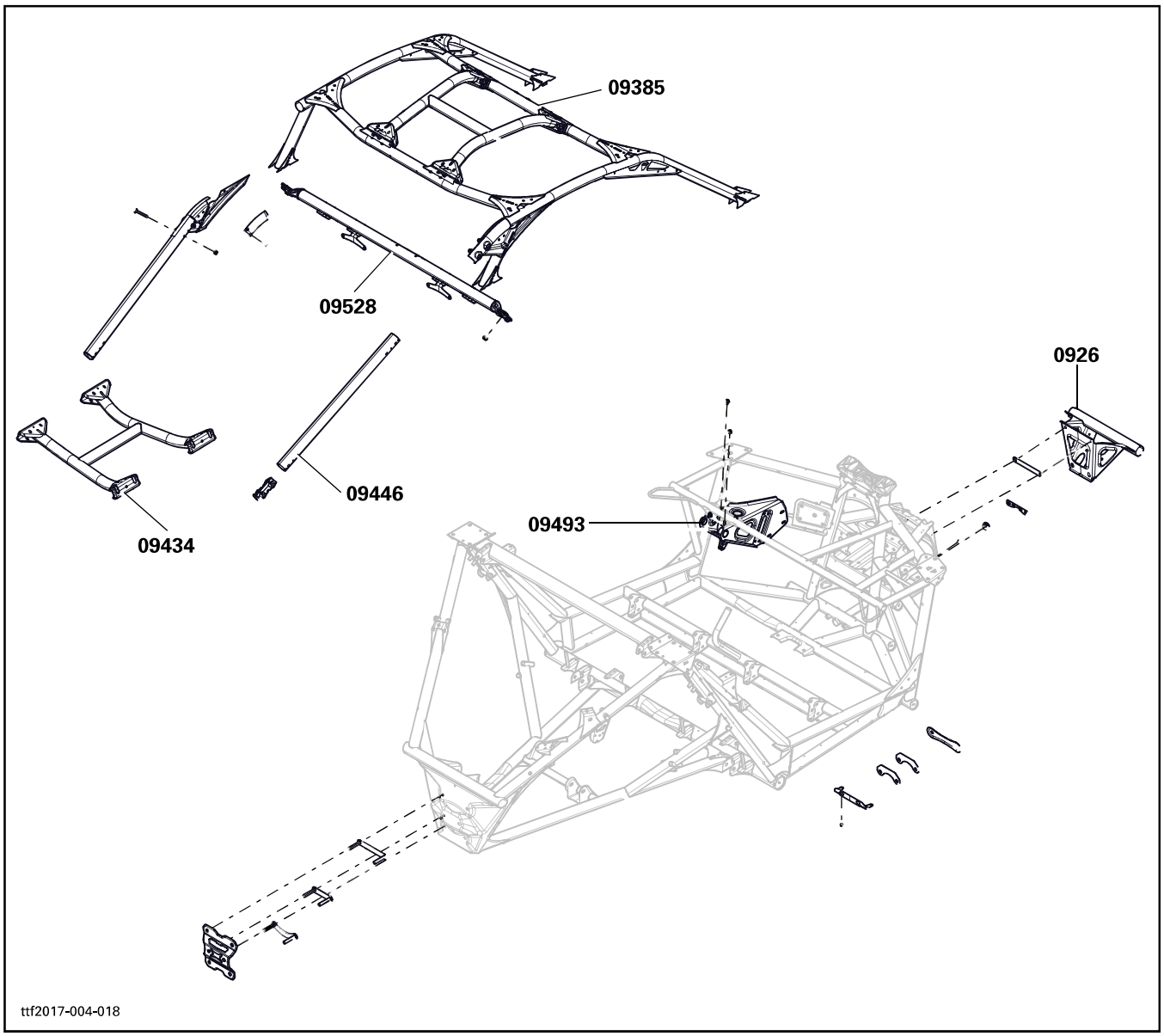
09385
09528
0926
09446
09493
09434
ttf2017-004-018

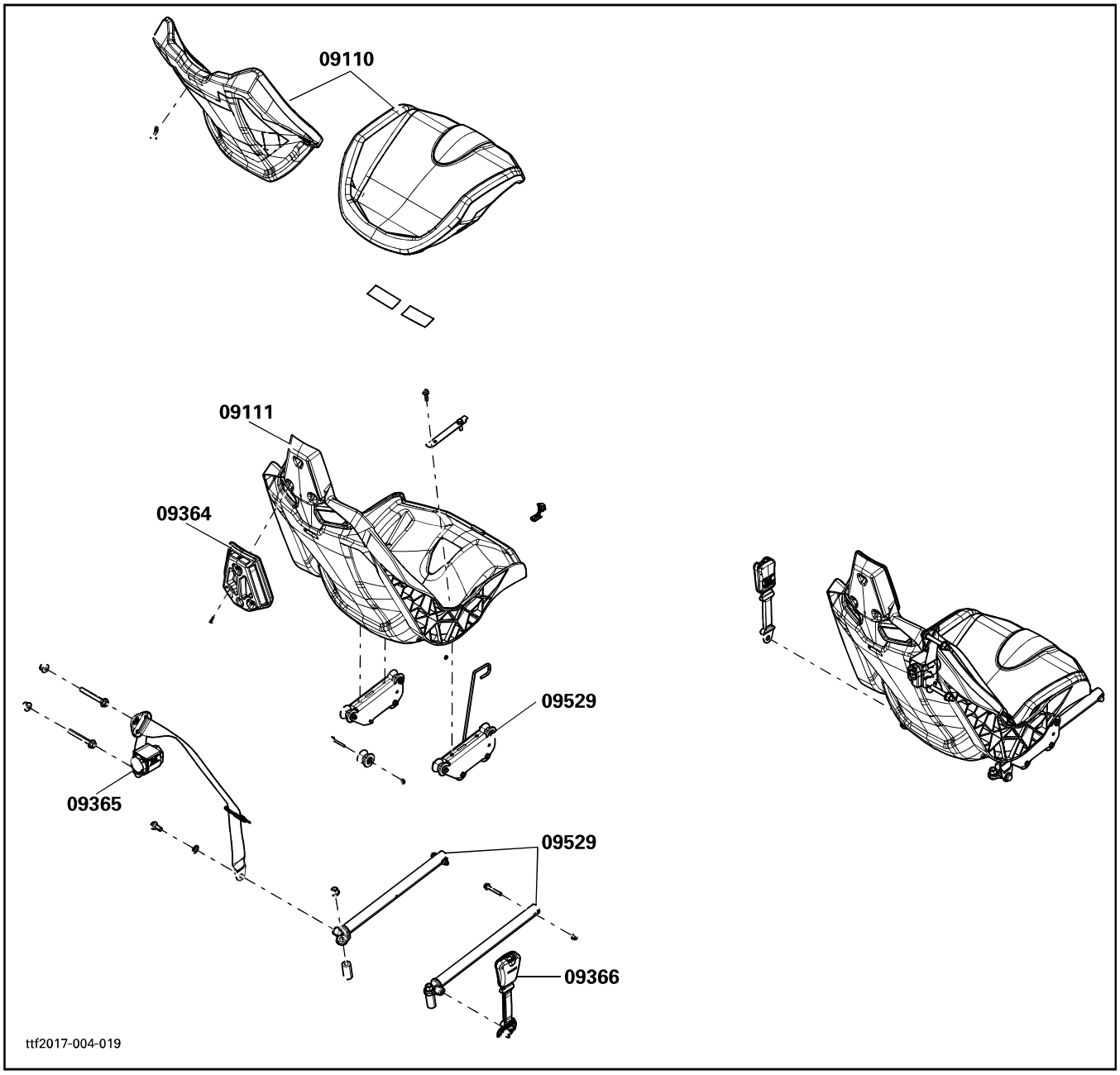
09110
09111
09364
09529
09365
09529
09366
ttf2017-004-019

SYSTEM SYSTÈME	CODE	DESCRIPTION	MAVERICK X3 15
10	**00**	**NO LABOR INVOLVED AUCUNE MAIN-D'OEUVRE**	**0**
10	01	IGNITION SWITCH INTERRUPTEUR D'ALLUMAGE	0.3
10	04	HEADLIGHT SWITCH INTERRUPTEUR DE PHARE	0.3
10	09	HEADLAMP AND/OR HEADLAMP SUPPORT (ASS'Y) (RH OR LH) PHARE AVANT ET/OU SUPPORT (COMPLET) (DROIT OU GAUCHE)	0.3
10	10	VOLTAGE REGULATOR RÉGULATEUR DE TENSION	0.3
10	13	BATTERY BATTERIE	0.3
10	14	FUSE BOX BOÎTE-FUSIBLE	0.8
10	29	TAIL LAMP HOUSING (ASS'Y) BOÎTIER DE FEU ARRIÈRE (COMPLET)	0.3
10	31	DC OUTLET PLUG PRISE D'ACCESSOIRE DC	0.3
10	34	ELECTRONIC MODULE MODULE ÉLECTRONIQUE	0.4
10	41	ENGINE HARNESS CÂBLAGE MOTEUR	2.0
10	49	MULTIFUNCTION GAUGE CADRAN MULTIFONCTION	0.3
10	51	MAIN WIRE HARNESS CÂBLAGE PRINCIPAL	2.7
10	52	STARTING RELAY RELAIS DE DÉMARRAGE	0.3
10	67	RELAY RELAIS	0.3
10	83	SWITCH INTERRUPTEUR	0.3
10	111	START BUTTON BOUTON DE DÉMARRAGE	0.3
10	112	OVERRIDE SWITCH INTERRUPTEUR DE NEUTRALISATION	0.3
10	159	SIGNATURE BEAM (RH OR LH) PHARE SIGNATURE (DROIT OU GAUCHE)	0.4

ELECTRICAL SYSTEM
SYSTÈME ÉLECTRIQUE

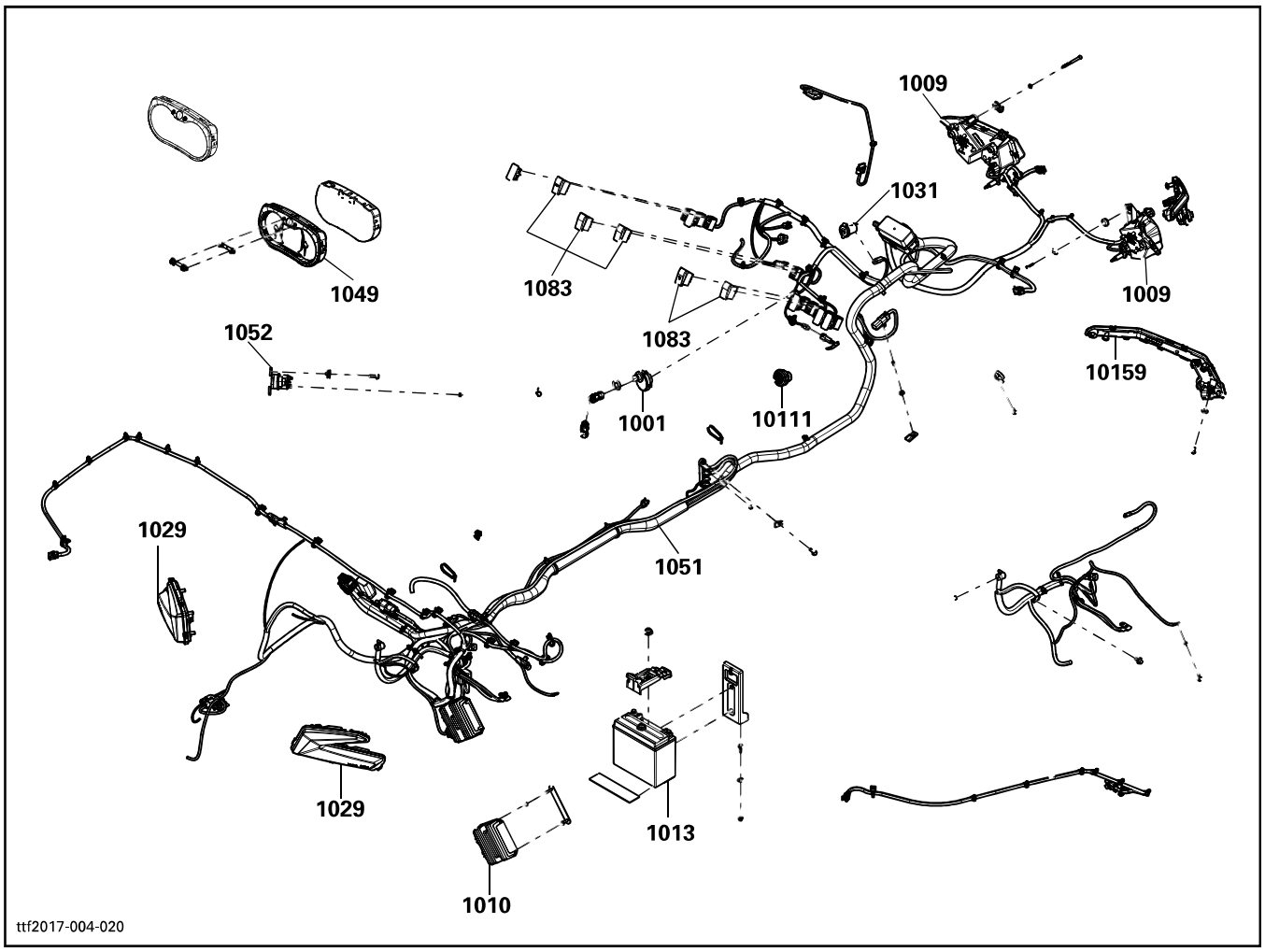


BRP
CLUB
BRP
2017
SEA-DOO
can-am



Good day everyone, my name is Dany Davey, I'm the Can-Am Off-Road product specialist for BRP.
Together we will go over the 2017 Technical Presentation.

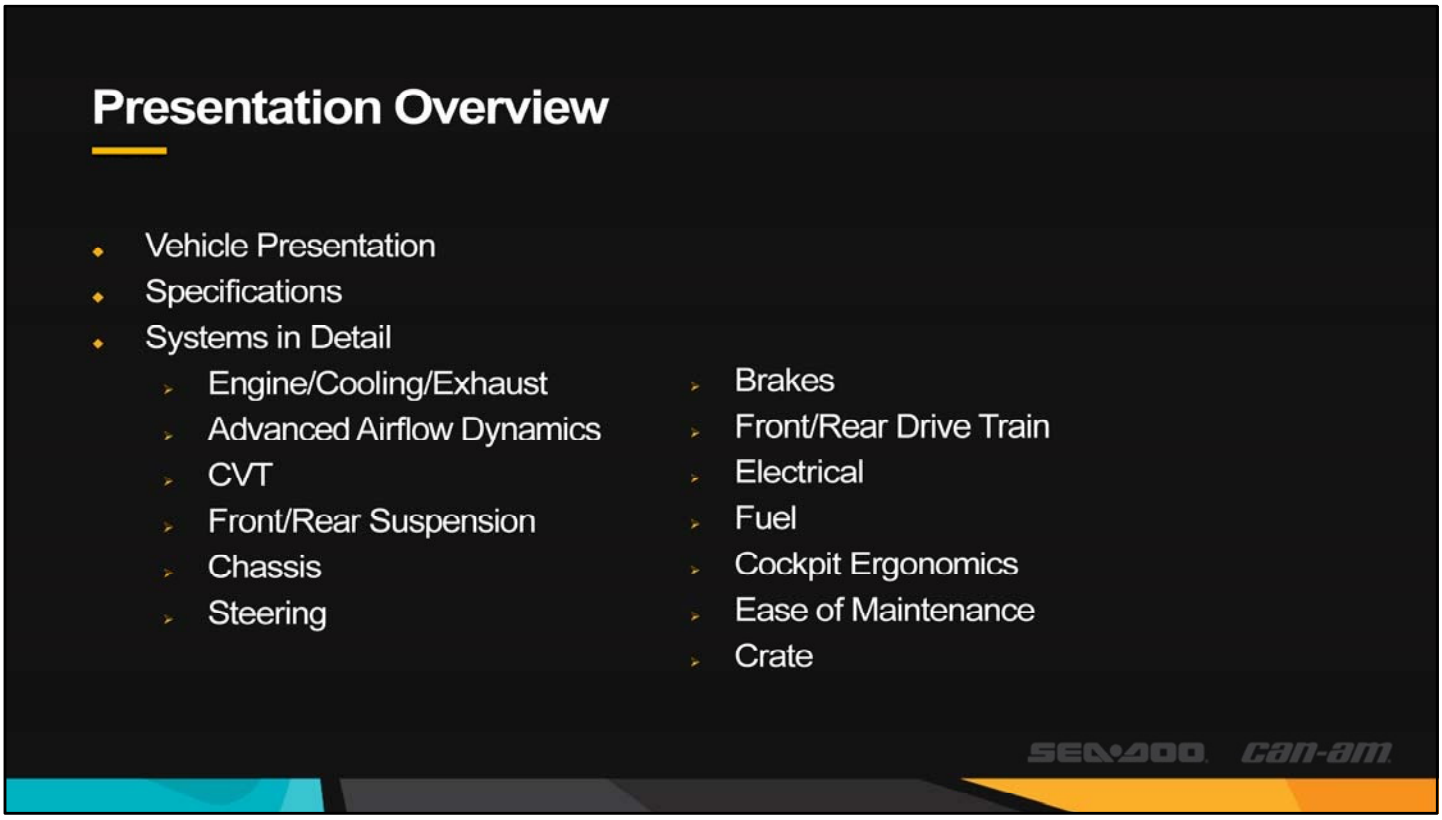

In this presentation we will take a look at our new and exciting product, the Maverick X3.
We will review the specifications and go over each system in detail.



The Maverick X3 will bring uncomparable precision with its 72 inch wide Xrs model



Defying the competition with a unheard-of 24 inch suspension travel and powerful 154 horsepower Rotax ACE engine.



Here are the 3 models; 1st the Maverick X3 base model available in white, the Maverick X3 Xds model available in triple black and circuit yellow. And the Maverick X3 Xrs available in triple black and gold/Can-Am red.

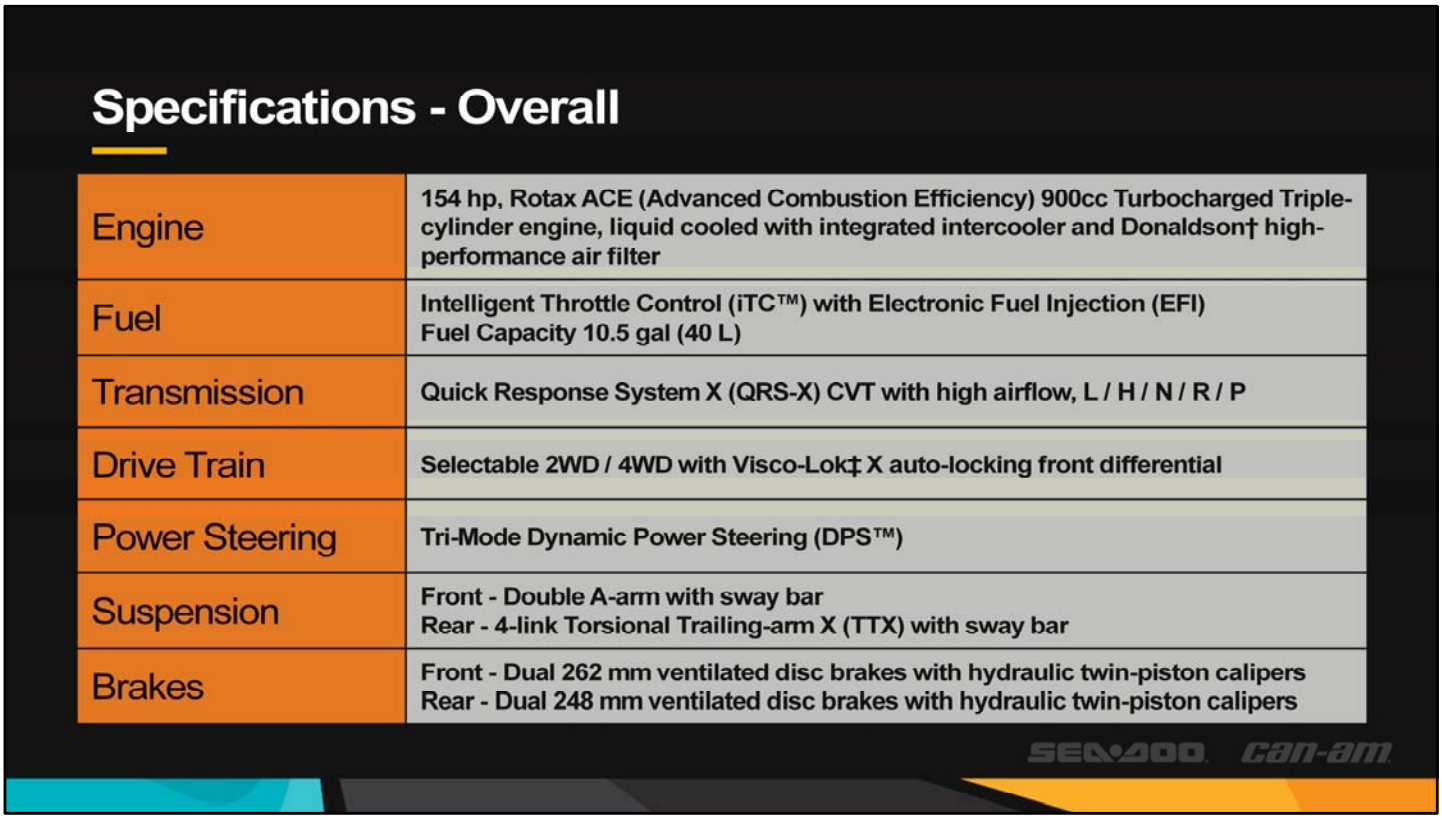

Let's take a look at the specifications included in all Maverick X3 models.
So we have our

- 154 hp, Rotax ACE (Advanced Combustion Efficiency) 900cc Turbocharged Triple-cylinder engine, liquid cooled with integrated intercooler and Donaldson† high-performance air filter.
- Intelligent Throttle Control (iTC™) with Electronic Fuel Injection (EFI) Fuel Capacity 10.5 gal (40 L)
- Quick Response System X (QRS-X) CVT with high airflow
- Selectable 2WD / 4WD with Visco-Lok‡ X auto-locking front differential
- Tri-Mode Dynamic Power Steering
- Front - Double A-arm with sway bar suspension and Rear - 4-link Torsional Trailing-arm X (TTX) with sway bar suspension
- Front brakes have dual 262 mm ventilated disc brakes with hydraulic twin-piston calipers and the rear brakes have dual 248 mm ventilated disc brakes with hydraulic twin-piston calipers

Specifications – Specific to Model

Suspension	X3	X3 X ds	X3 X rs
Front Travel	20”	20”	22”
Front Shocks	FOX 2.5 PODIUM Piggyback with QS3 compression adjustment	FOX 2.5 PODIUM RC2 Piggyback with dual speed compression and rebound adjustments	FOX 2.5 PODIUM RC2 Piggyback with bypass, dual speed compression and rebound adjustments
Rear Travel	20”	20”	24”
Rear Shocks	FOX 2.5 PODIUM Piggyback with QS3 compression adjustment and bottom-out control	FOX 2.5 PODIUM RC2 Piggyback with dual speed compression, rebound adjustments and bottom-out control	FOX 3.0 PODIUM RC2 remote reservoir with bypass, dual speed compression and rebound adjustments

SEA-DOO can-am

A closer look at the impressive suspension for each Maverick X3 model.
The X3 base and X3 Xds each have 20 inch front and rear suspensions whereas the X3 Xrs model has a 22 inch front and 24 inch rear suspension.
The X3 base model will have FOX 2.5 Podium piggyback shocks with QS3 compression adjustment in front and rear.
The X3 Xds model will have FOX 2.5 Podium RC2 piggyback shocks with dual speed compression and rebound adjustment in the front and rear.
And the X3 Xrs will come with the FOX 2.5 Podium RC2 piggyback shocks with dual speed compression and rebound adjustment in the front and FOX 3.0 Podium RC2 with remote reservoir with by-pass offering dual speed compression and rebound adjustments.

Specifications – Specific to Model

DIMENSIONS/ CAPACITIES	X3	X3 X ds	X3 X rs
Wheels/Tires	14" aluminum wheels Maxxis Bighorn 2.0 28"	14" aluminum beadlock wheels Maxxis Bighorn 2.0 29"	14" aluminum beadlock wheels Maxxis Bighorn 2.0 30"
Ground Clearance	14 in. (35.6 cm)	14 in. (35.6 cm)	15 in. (38.1 cm)
L x W x H	131 x 64 x 66 in. (332.7 x 162.5 x 167.6 cm)	131 x 64 x 66 in. (332.7 x 162.5 x 167.6 cm)	132 x 72 x 67 in. (335.3 x 182.9 x 170.2 cm)
Estimated Dry Weight	1,470 lb (666.9 kg)	1,490 lb (675.9 kg)	1,585 lb (718.9 kg)

Now a few specs per model on wheels and tires, ground clearance, dimensions and dry weight.
All models come with 14 inch wheels but the X3 base will have 28 inch tires, the X3 Xds will have 29 inch tires, and the X3 Xrs will have 30 inch tires.
The X3 Xrs will have a ground clearance of 15 inches whereas the X3 base and X3 Xds will both have 14 inch ground clearance.
The X3 base and X3 Xds are both 64 inches wide whereas the X3 Xrs is 72 inches wide.
The X3 base and X3 Xds are close in dry weight but the X3 Xrs is almost 100 pounds heavier.

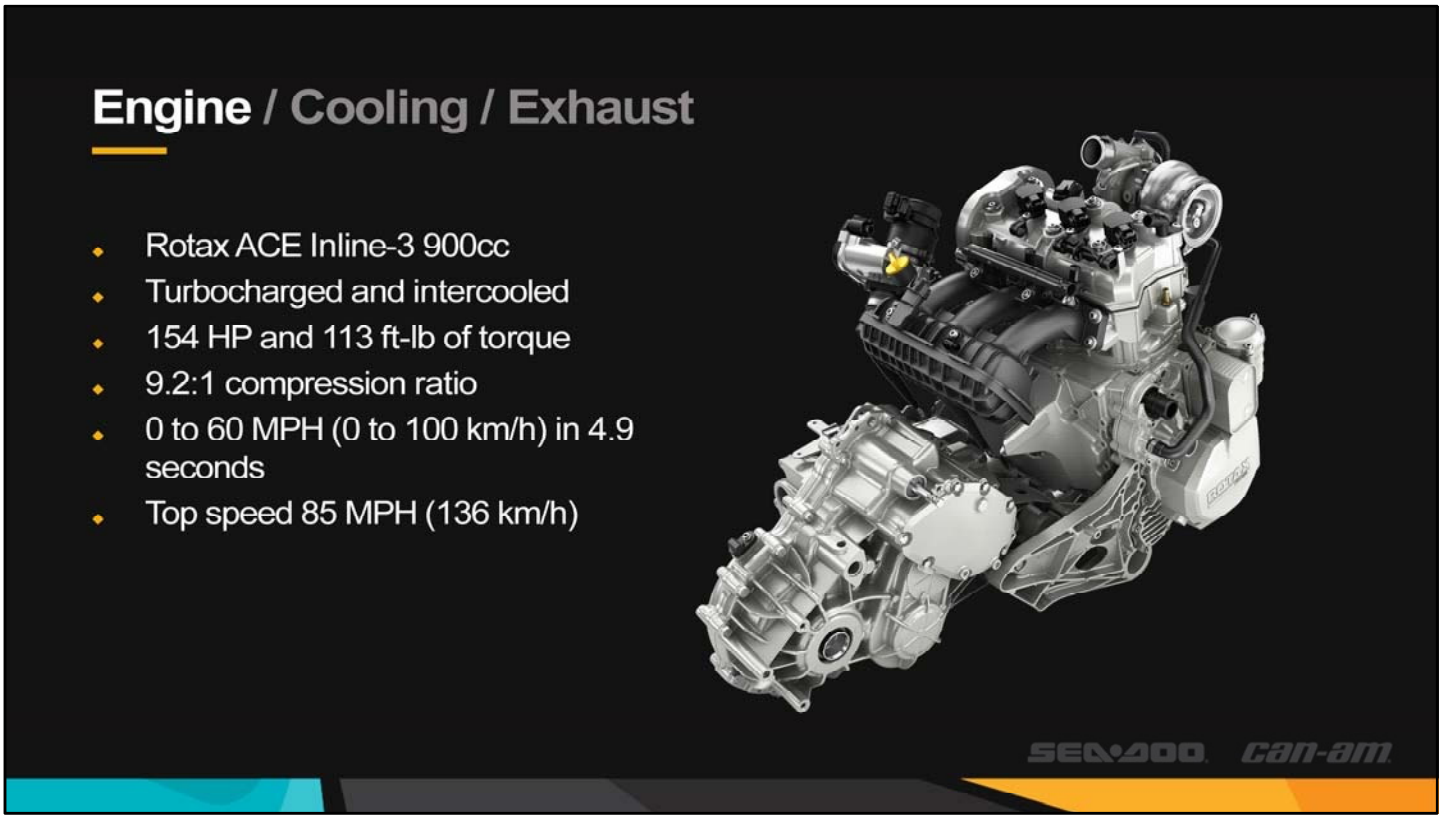

Let's start taking a look at the systems of the Maverick X3 in detail, starting with the Engine.
As mentioned, a Rotax ACE inline 3 900cc turbocharged and intercooled engine delivering 154 horsepower and 113 foot-pounds of torque.
This engine has a 9.2:1 compression ratio capable of doing 0 – 60 mph in 4.9 seconds getting to a top speed of 85 mph.

Engine / Cooling / Exhaust

- Turbo
  - Electronic boost control
  - Coolant circuit
  - Pressurized oil circuit
  - Integrated exhaust manifold and turbine housing
  - 14 psi boost
    - 27.5 psi total air pressure at peak power

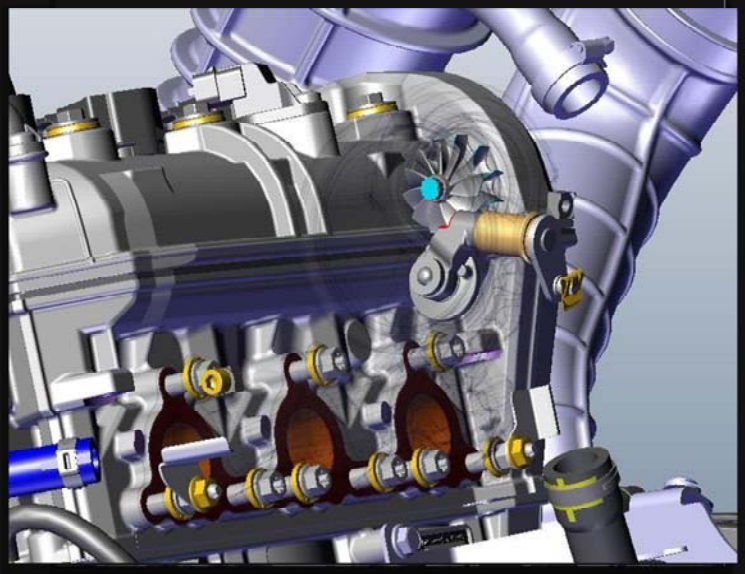

Looking closely at this new turbo, which has electronic boost control, a coolant circuit and pressurized oil circuit, is completely integrated to the exhaust manifold. This turbo delivers 14 psi of boost for an approximate total of 27.5 psi total air pressure at peak power.

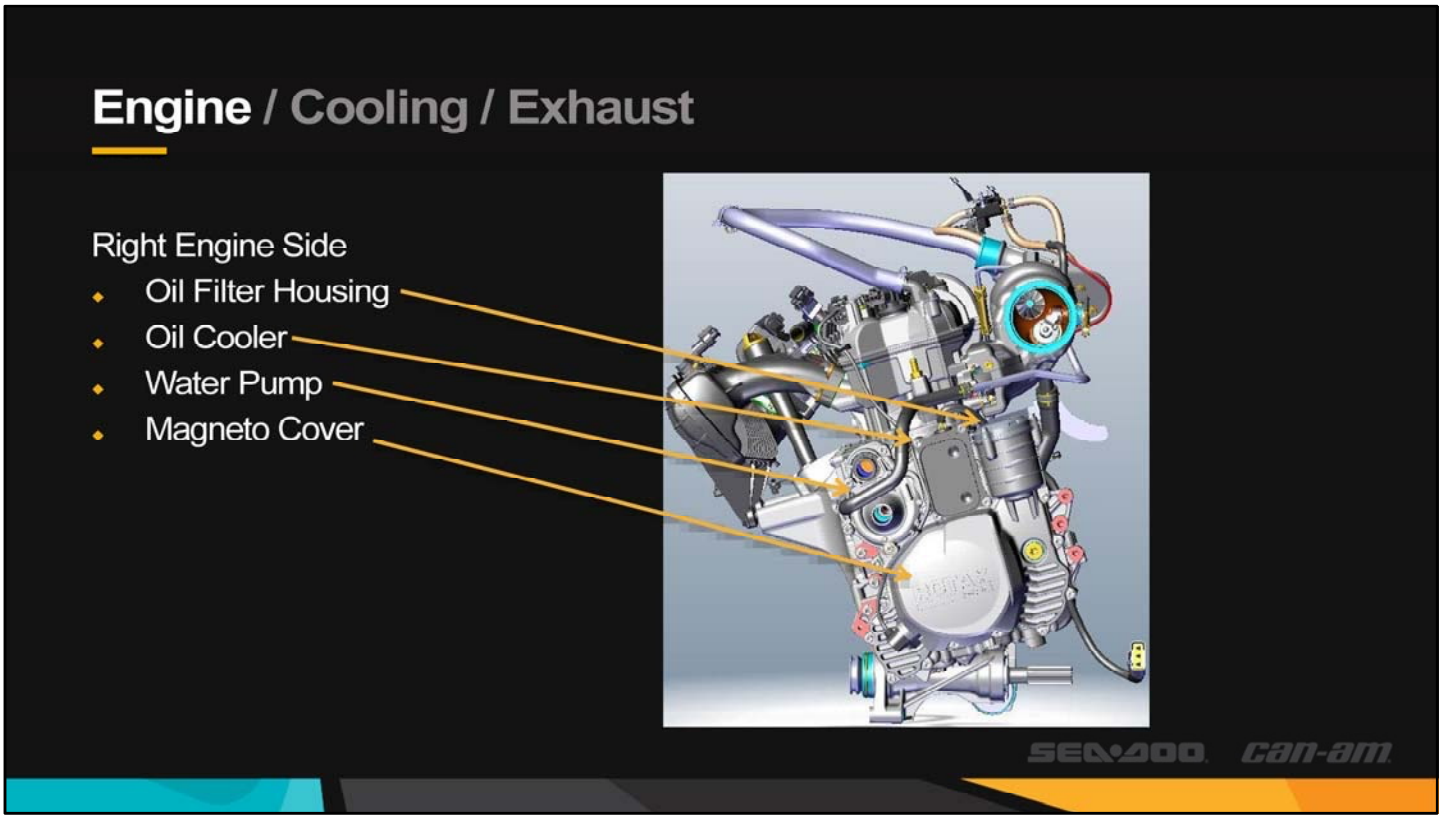

Let's get familiar with this 900cc ACE engine. Here are a few key components.
On the right side you will find the:

- Oil Filter Housing
- Oil Cooler
- Water Pump
- Magneto Cover

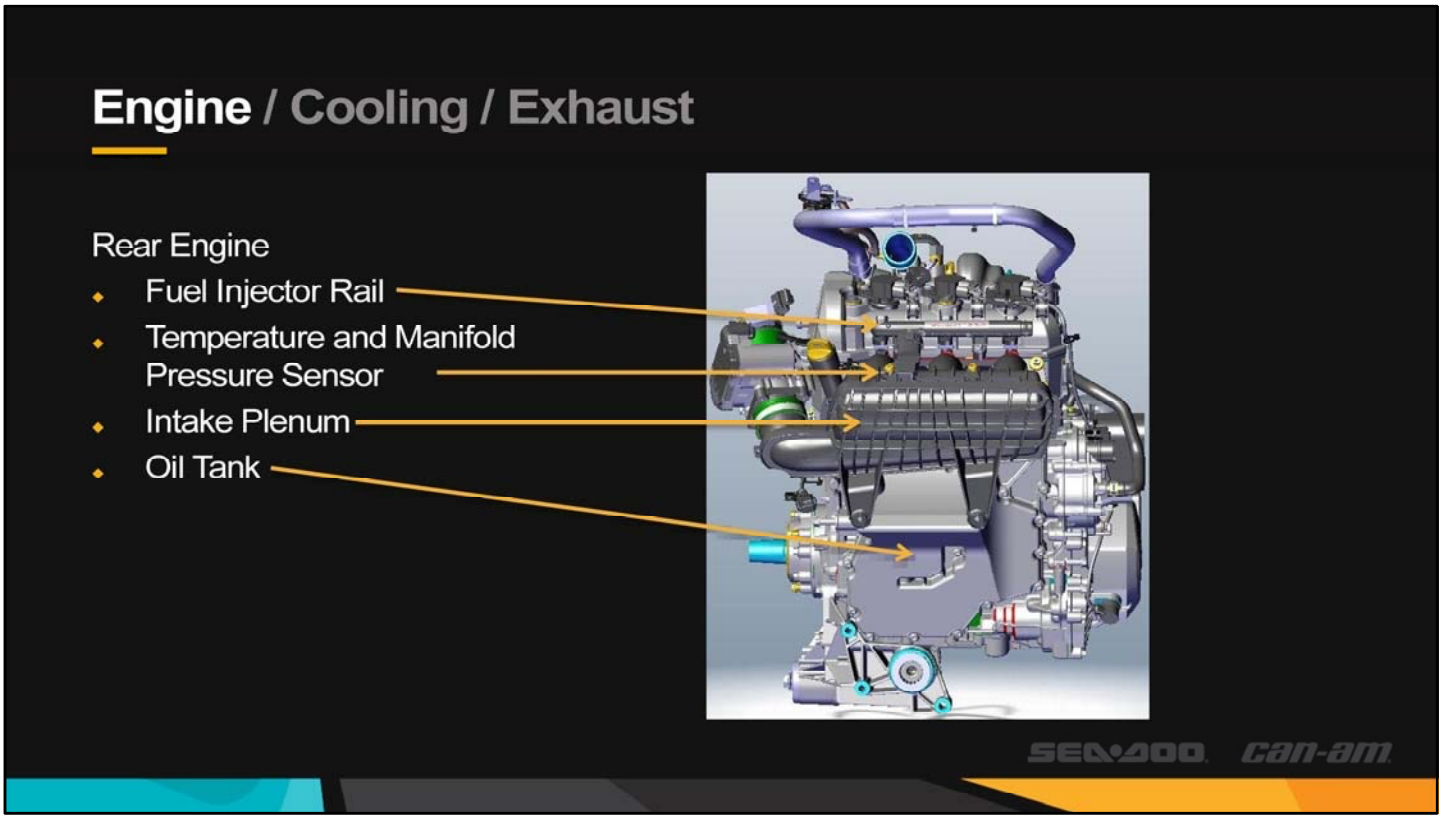

On the rear of the engine you will find the:
- Fuel Injector Rail
- Temperature and Manifold Pressure Sensor
- Intake Plenum
- Oil Tank

Engine / Cooling / Exhaust

Left Engine Side

- Pressure Sensor Upstream Throttle Body
- Throttle Body Ass'y
- Crankshaft PTO

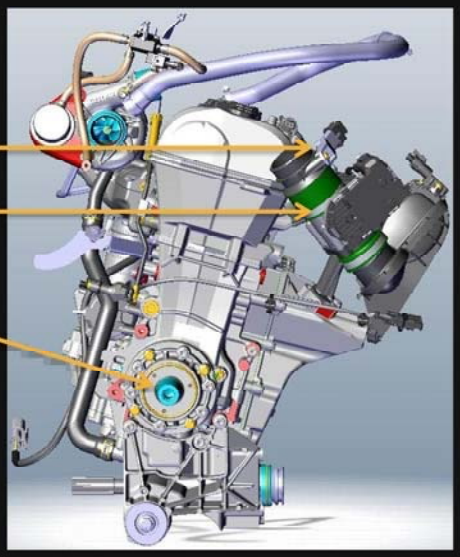

On the left hand side of the engine we have the:
• Pressure Sensor Upstream of the Throttle Body
• Throttle Body Ass'y
• Crankshaft PTO

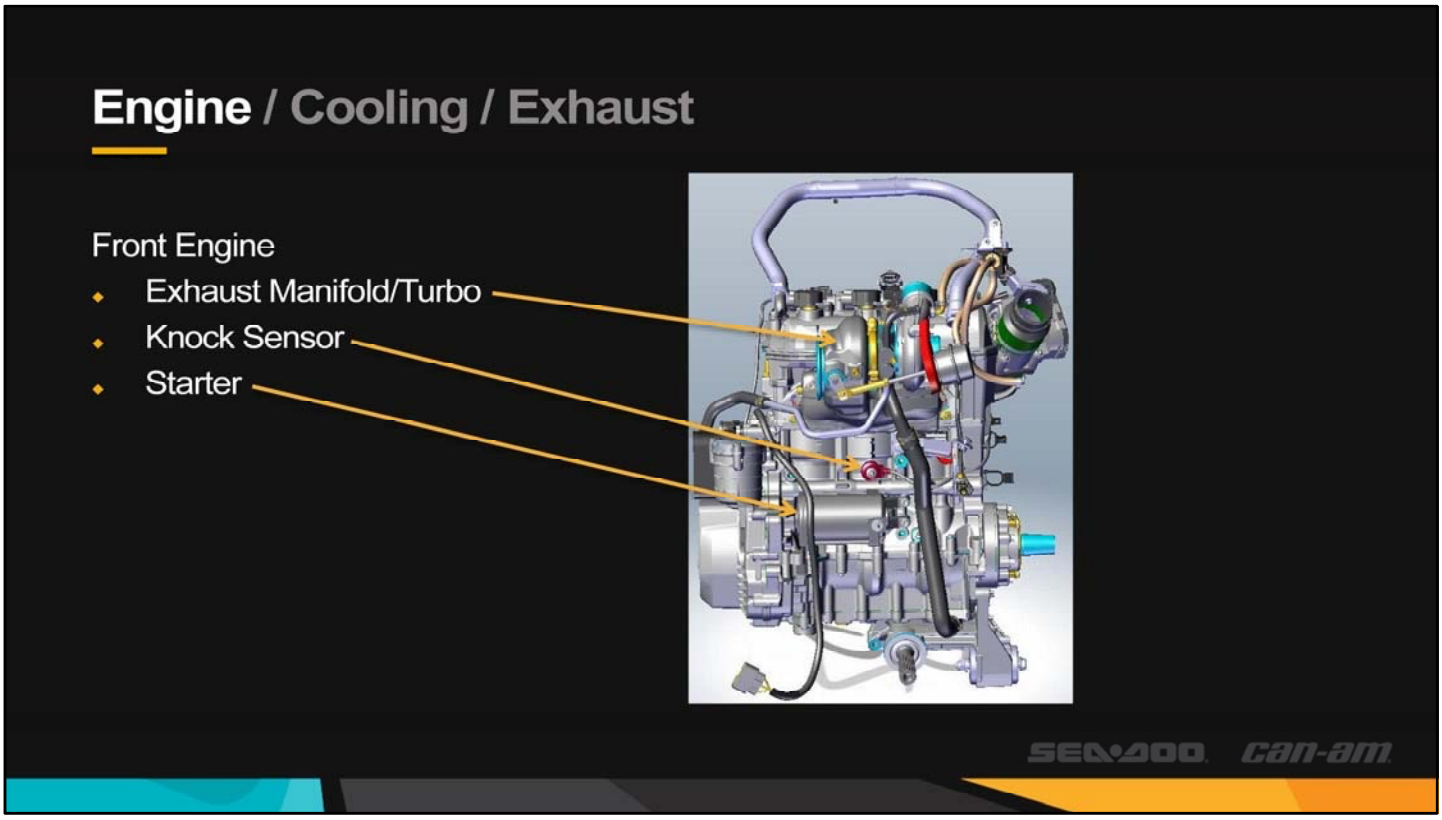

In the front of the engine:
- Exhaust Manifold/Turbo
- Knock Sensor
- Starter

Engine / Cooling / Exhaust

Top Engine

- Cam Position Sensor
- Ignition Coils



And on the top of the engine you will find the:
• Cam Position Sensor
• Ignition Coils

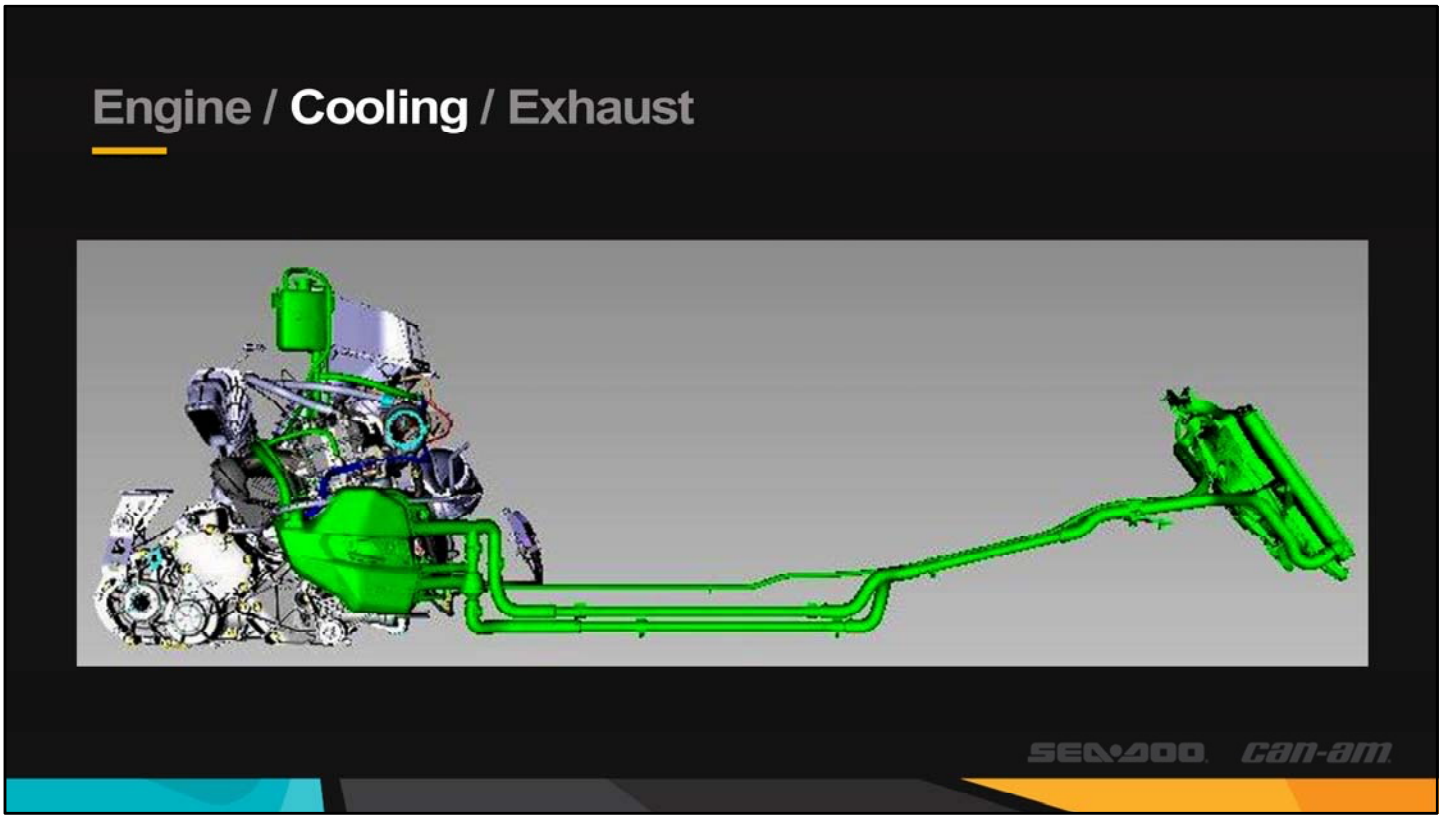

Let’s move on to the cooling system

Engine / Cooling / Exhaust

- Increased air flow with multiple front grill openings



The Maverick X3 has increased air flow due to multiple front grill openings

Engine / Cooling / Exhaust

Service Certified

- Snap fitted front grill and hood to permit cleaning of radiator

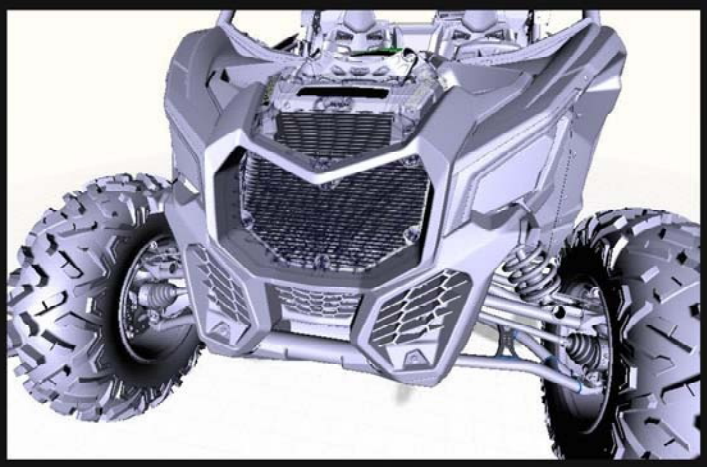

SEA-DOO can-am

Snap fitted front grill and hood to permit easy cleaning of radiator.

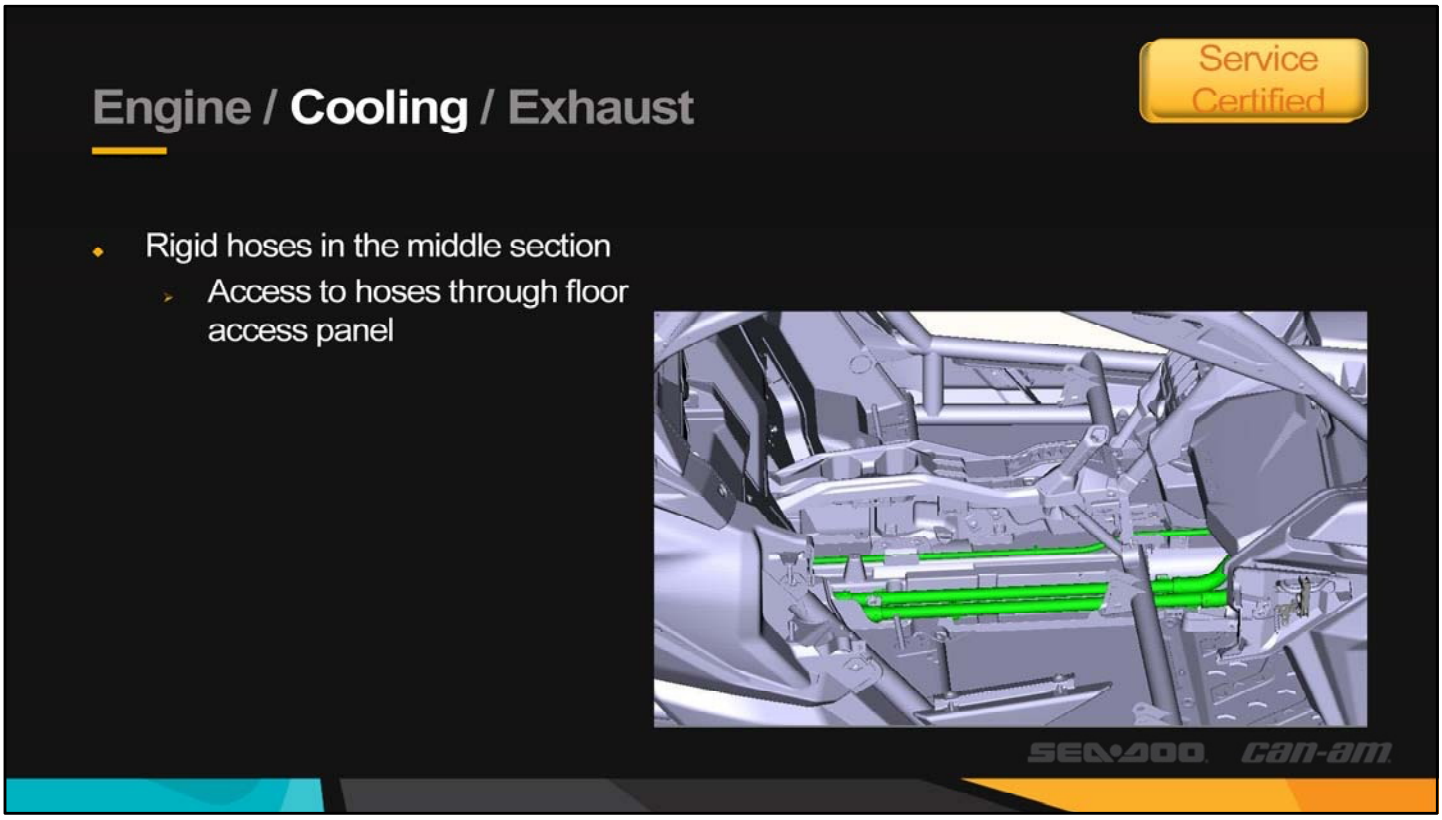

Access the rigid hoses through floor access panel in the middle section.

Engine / **Cooling** / Exhaust

- Cooling line through turbo

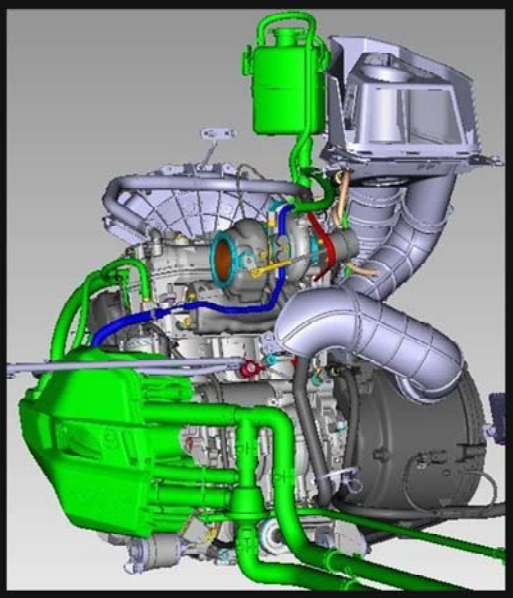

And as mentioned before a cooling line that runs through the turbo.

Engine / Cooling / **Exhaust**

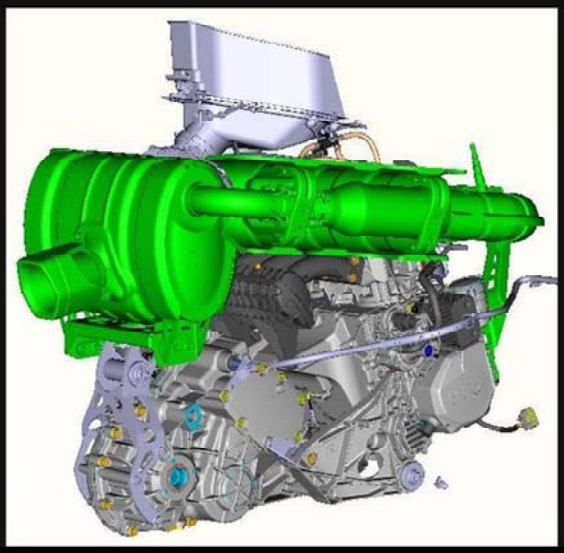

Moving on to the exhaust system.

Engine / Cooling / **Exhaust**

- Integrated catalytic converter and Lambda sensor

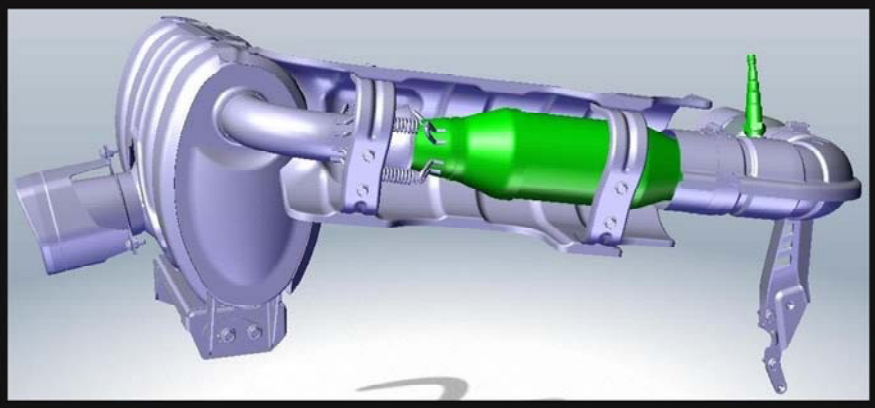

It has an integrated catalytic converter and Lambda sensor.

Engine / Cooling / **Exhaust**

- Heat management strategy:
  - Shielded manifold
  - Shielded exhaust and muffler
  - CVT air outlet used to cool exhaust at 2 strategic areas

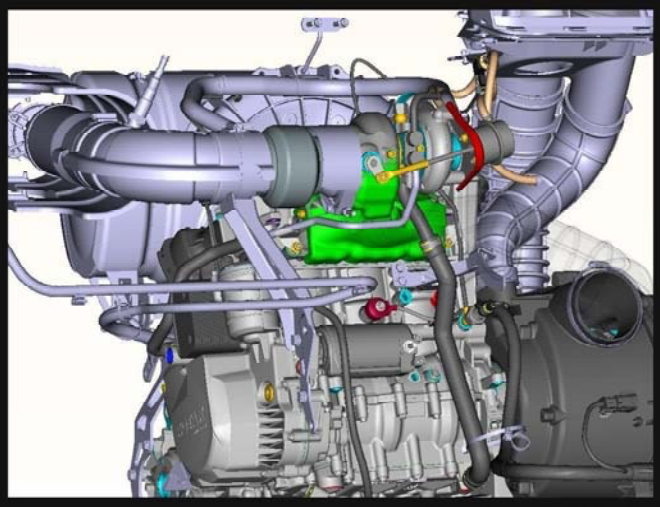

SEA-DOO can-am

Let’s talk about heat management. The strategy includes having a fully shielded manifold,....

Engine / Cooling / **Exhaust**

- Heat management strategy:
  - Shielded manifold
  - Shielded exhaust and muffler
  - CVT air outlet used to cool exhaust at 2 strategic areas

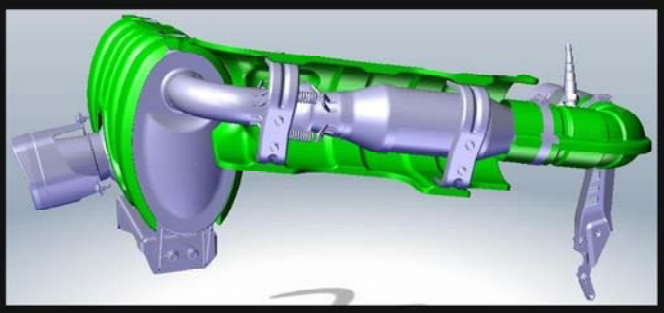

SEA-DOO can-am

A shielded exhaust and muffler and...

Engine / Cooling / **Exhaust**

- Heat management strategy:
  - Shielded manifold
  - Shielded exhaust and muffler
  - CVT air outlet used to cool engine compartment at 2 strategic areas

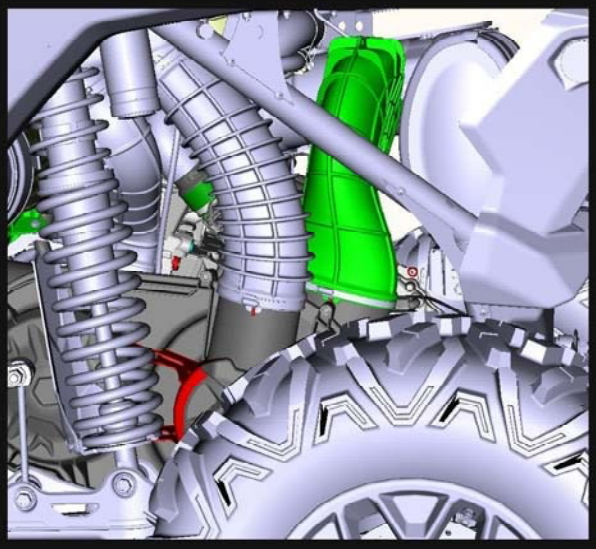

SEA-DOO can-am

CVT air outlet used to cool engine compartment at 2 strategic areas, one on the front of the engine behind the firewall and one on the rear of the engine.

Advanced Airflow Dynamics

Service Certified

- Improved filtration efficiency
  - 3 dedicated air intakes
    - Two for the CVT
    - One for the engine
  - Located high and dry – for clean air and easier servicing

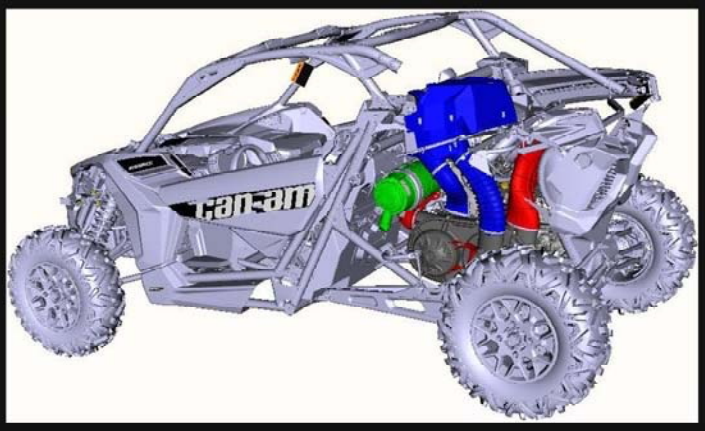

SEA-DOO can-am

The concept of advanced airflow dynamics is important on the Maverick X3.
The 1st point is to have the best air filtration for 3 dedicated air intakes, 2 for the CVT and 1 for the engine.
The entry point of the air is located high to stay dry and easy to service.

Advanced Airflow Dynamics

- Engine air intake
  - Donaldson air filter for extreme sand conditions
    - Easy access through left wheel housing
    - Tool less removal and installation
    - Partly self cleaning system for improved efficiency (Duckbill)

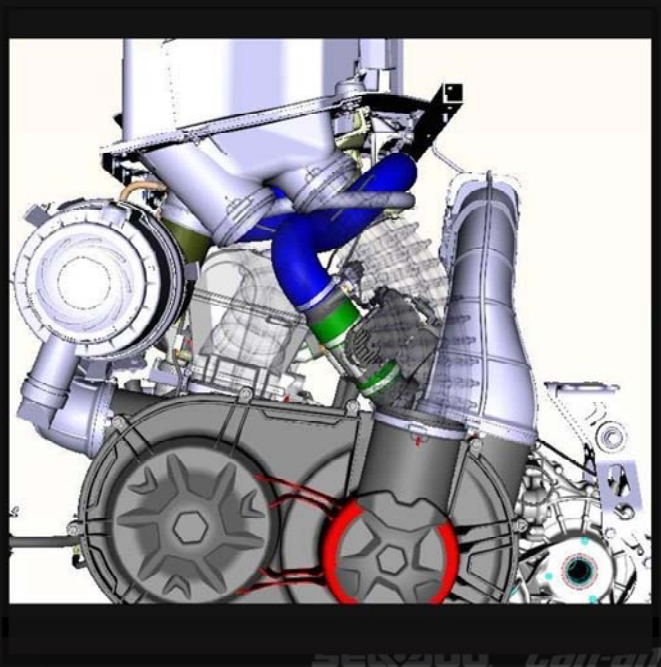

The air intake uses a Donaldson air filter which is great for sand conditions, this clean air is turbocharged and cooled before entering the engine.
The air filter is easily accessible and doesn't require any tools to remove or install and the air filter housing has a duckbill allowing easy partial cleaning.

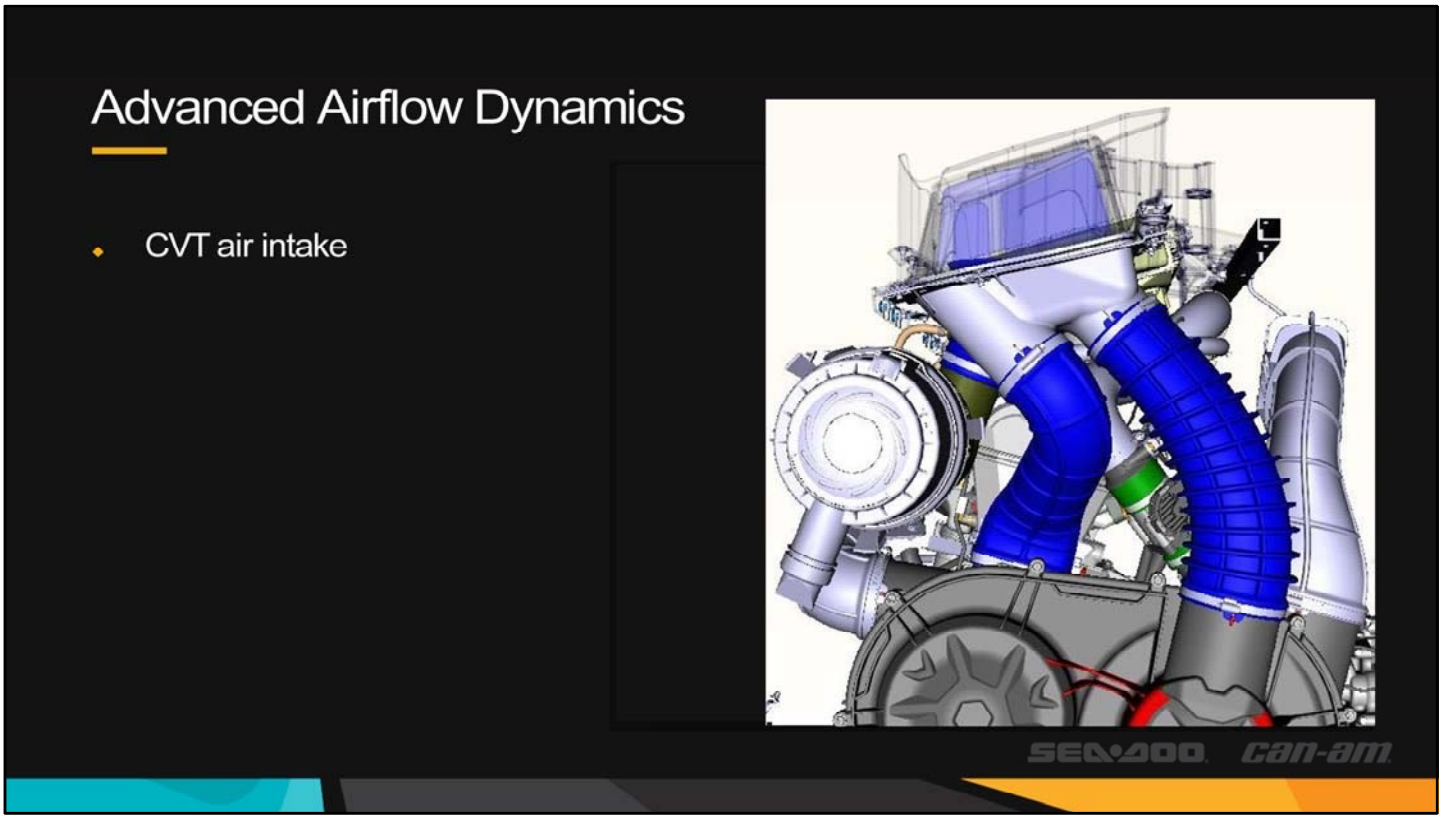

The 2 CVT air intakes use tight meshed inlets to bring air to the pulleys.

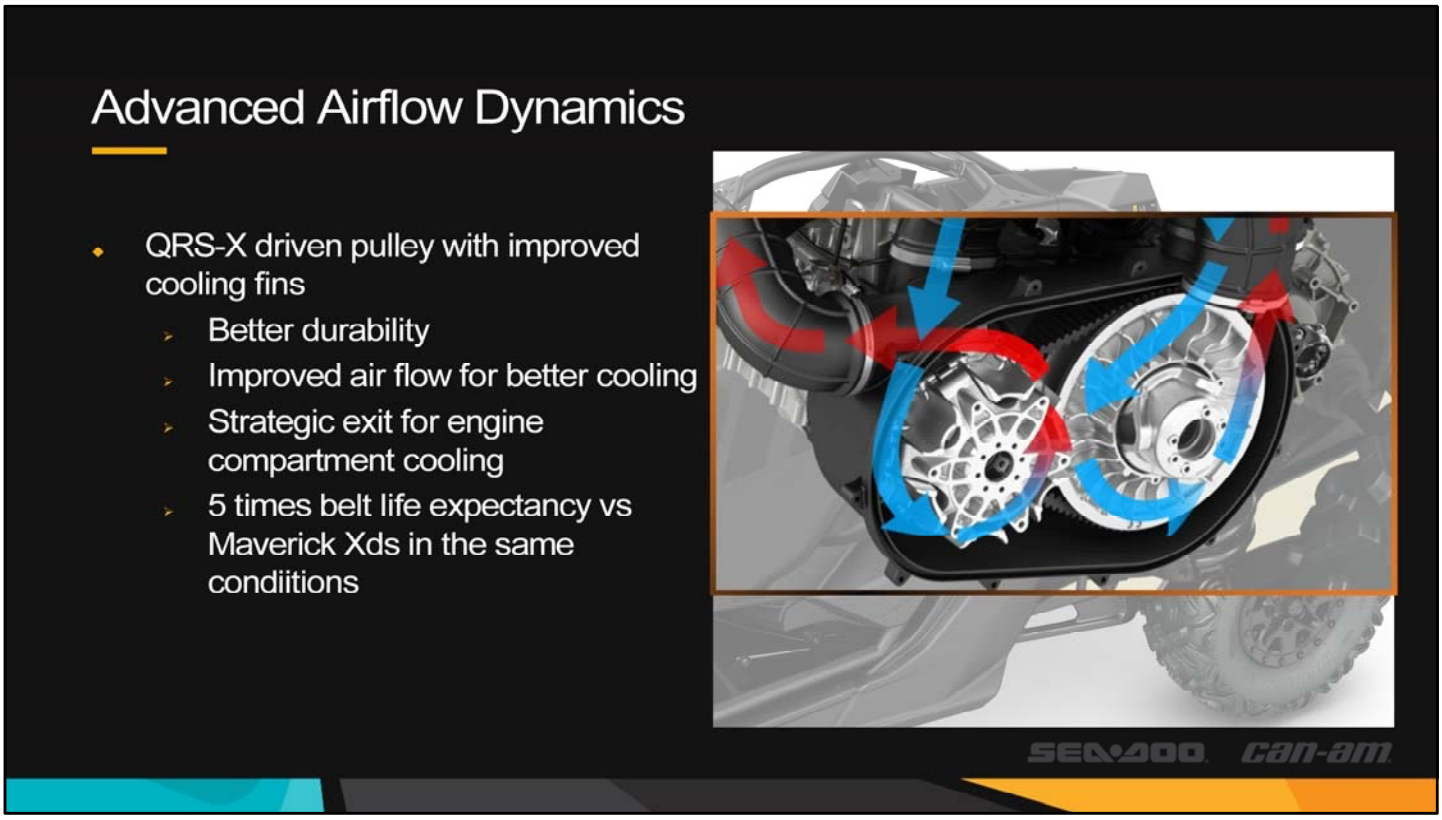

The QRS-X driven pulley has improved cooling fins which offer better durability due to improved air flow for better cooling, strategic exit for engine compartment cooling. All this has greatly improved belt life up to 5 vs Maverick Xds in the same conditions.

CVT

Service Certified

- High-Performance QRS-X CVT Transmission
- Oversized pulleys
  - Wider transmission ratio band for reduced low speed slipping
  - Better response during acceleration
- Easy removal of CVT belt
- Standard Ski-Doo belts
- Easy access to CVT cover drain plug

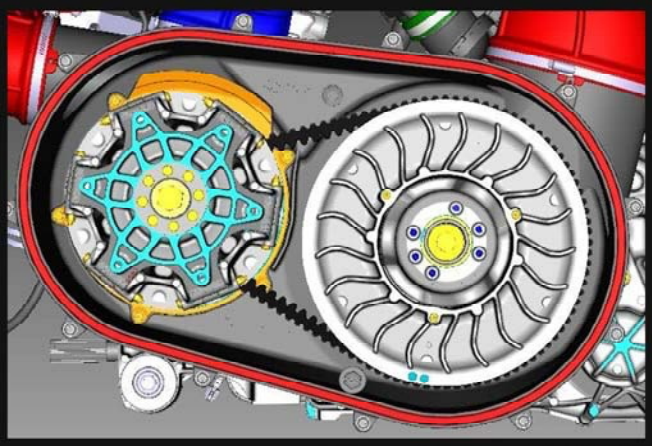

SEA-DOO can-am

Since we're in the CVT let's continue with this system.
The High-Performance QRS-X CVT Transmission has oversized pulleys which offer a wider transmission ratio band for reduced low speed slipping and better response during acceleration.
Easy removal of CVT belt, sues standard Ski-Doo belts, and has easy access to CVT cover drain plug

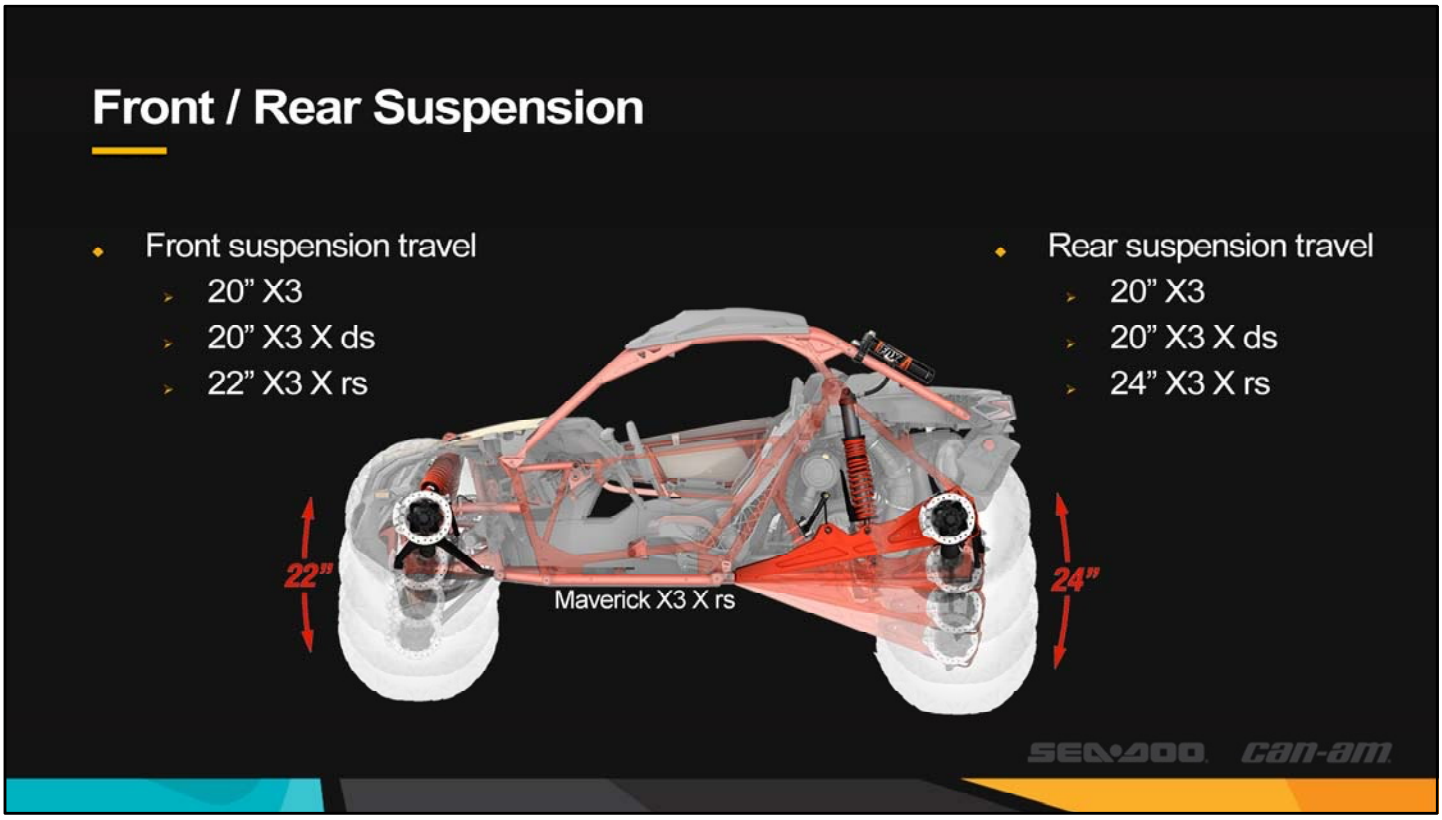

Now for the front and rear suspension system.

Front / Rear Suspension

- Double A-Arms suspension with swaybar



The Maverick X3 front suspension uses double A-Arms with swaybar.

Front / Rear Suspension

- Increased ground clearance lower A-Arm design
- Increased angle capacity for upper ball joint

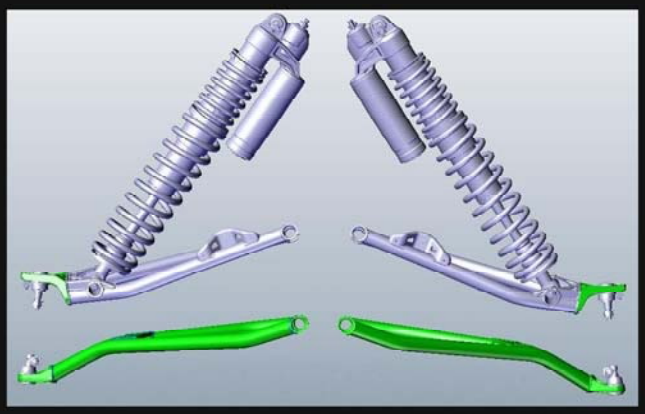

The lower A-Arm design increases ground clearance and the upper ball joint has increased angle capacity to accommodate the full potential of the suspension travel.

Front / Rear Suspension

- M12 suspension bolts all around
- Grease ports for A-Arms /swaybar bushings
- Suspension bushing wear plates

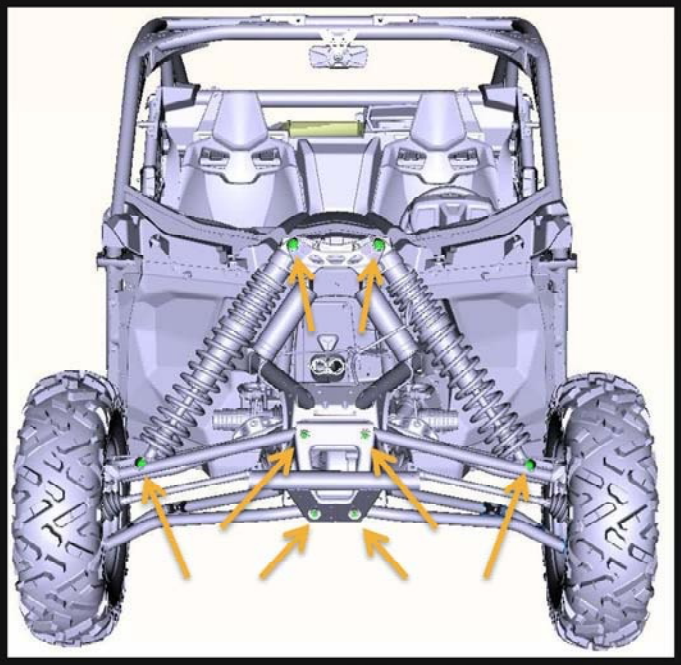

Note the hefty M12 suspension bolts all around, grease ports for A-Arm, which also have wear plates, and swaybar bushings.

Front / Rear Suspension

- Forged aluminum knuckles to reduce unsprung mass
- Knuckle geometry to reduce steering effort
- Less than 1 degree bump-steer

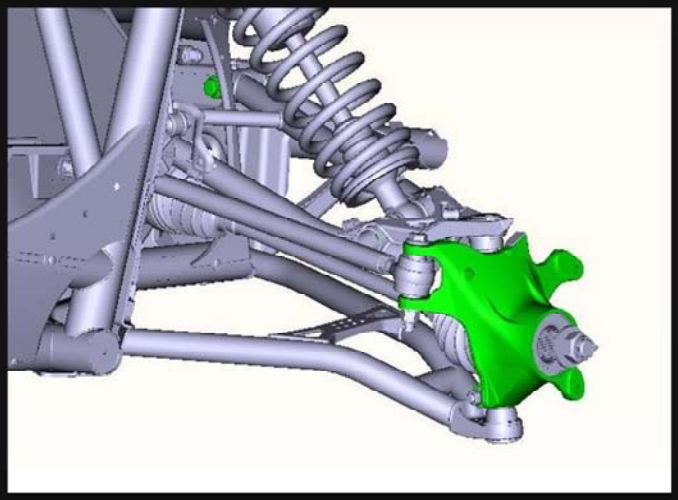

The forged aluminum knuckles reduce unsprung mass, reduce steering effort, and allow less than 1 degree bump-steer.

Front / Rear Suspension

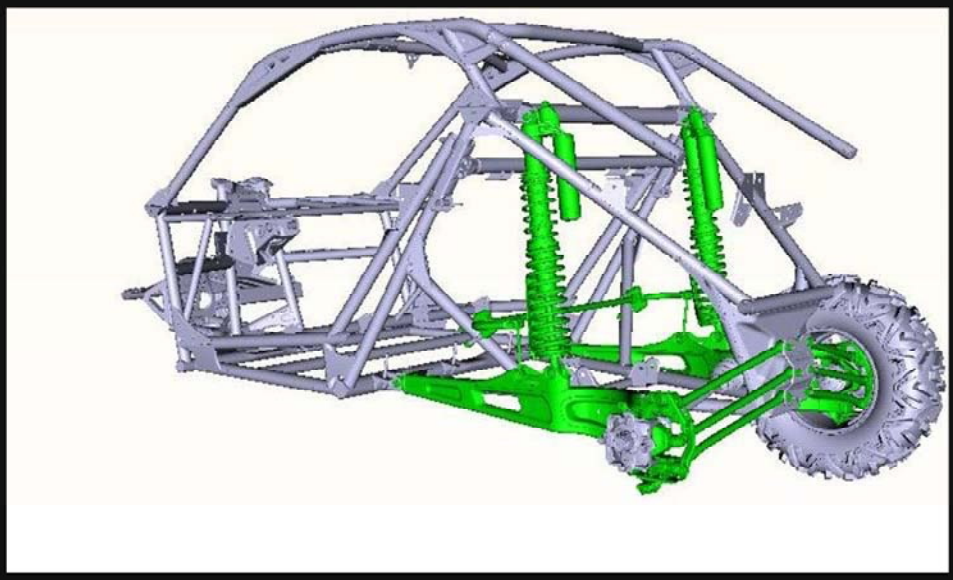

The rear suspension.....

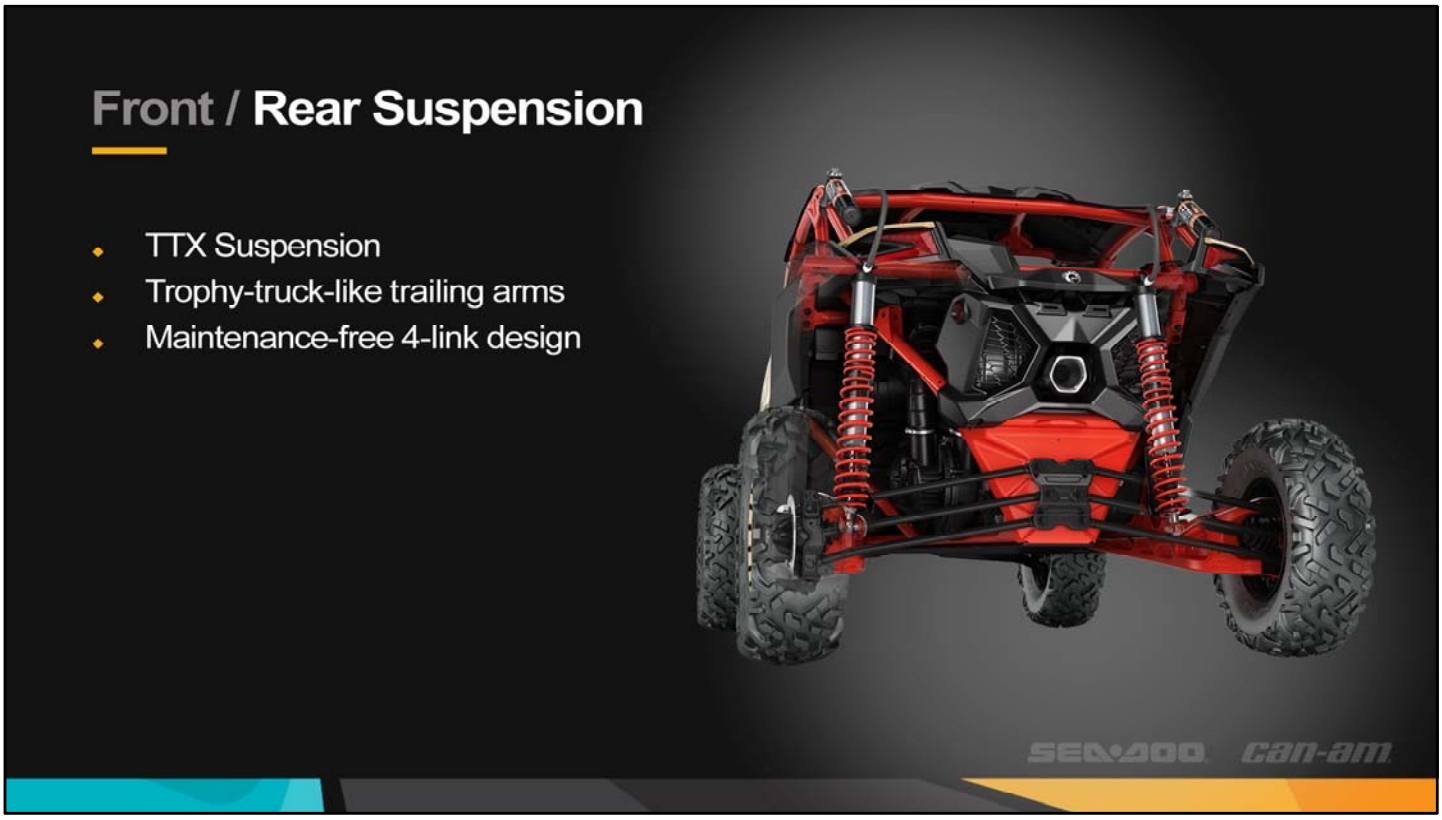

introduces the new TTX Suspension which has Trophy-truck-like trailing arms and maintenance-free 4-link design

Front / Rear Suspension

- Forged aluminum knuckles to reduce unsprung mass
- M12 suspension bolts all around
- Grease ports on swaybar bushings

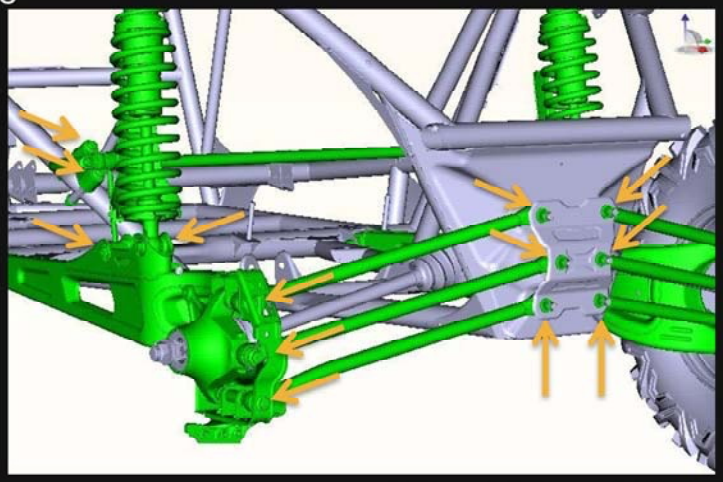

The forged aluminum knuckles reduce unsprung mass, and also has M12 suspension bolts all around. Only the swaybar bushings have grease ports.



Let’s take a look at the chassis of the Maverick X3.

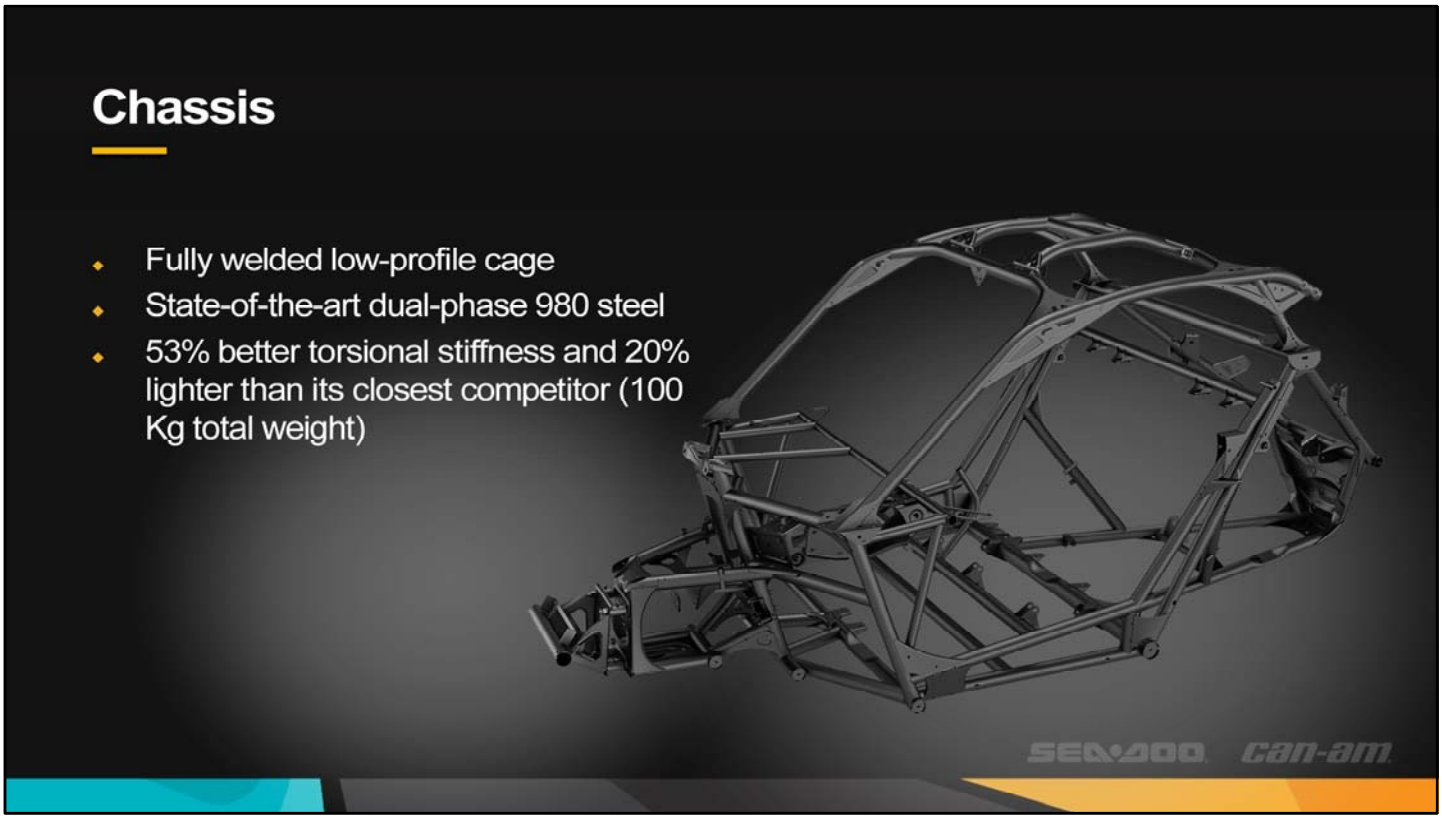

The chassis has a fully welded low-profile cage, uses state-of-the-art dual-phase 980 steel which offers 53% better torsional stiffness and is 20% lighter than its closest competitor (100 Kg total weight).

Chassis

- Replacement cage = bolted
- No welding required

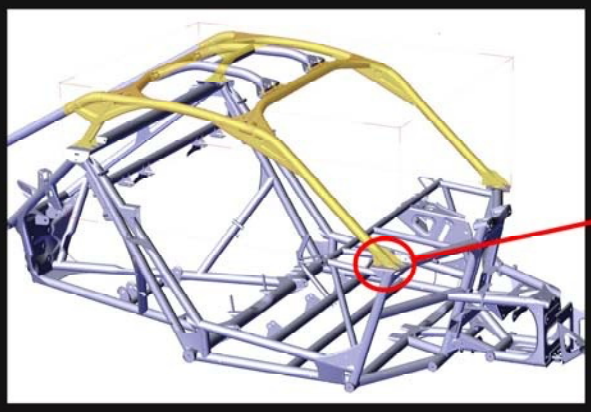

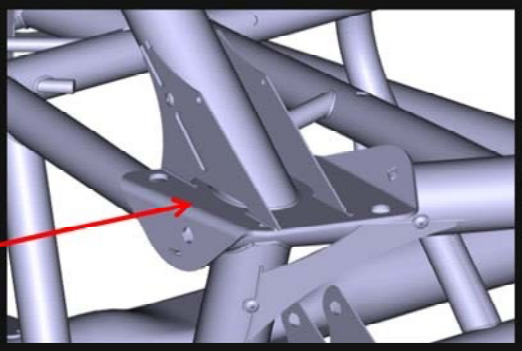

Note that in the event the top cage needs to be replaced, the service part will be bolted directly to the chassis.

Steering

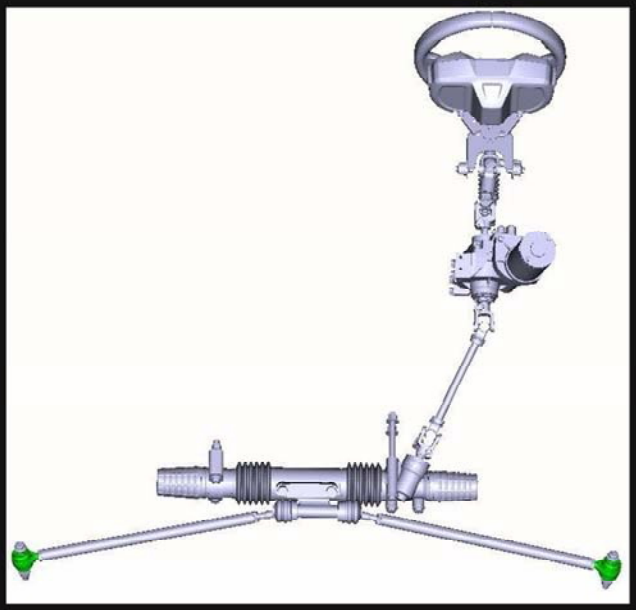

Now, let’s review the steering system.

Steering

- D-shaped steering wheel
- Adjustable steering wheel (25 degrees) with integrated gauge
- 1.5 turns lock-to-lock quick-ratio turning





The Maverick X3 has an exclusive D-shaped steering wheel with 25 degrees of up and down adjustment. The quick ratio turning only takes 1.5 turns from lock-to-lock.

Steering

- Center take-off type rack and pinion

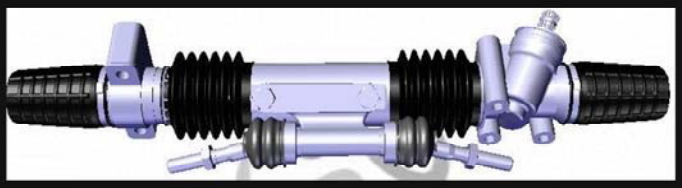

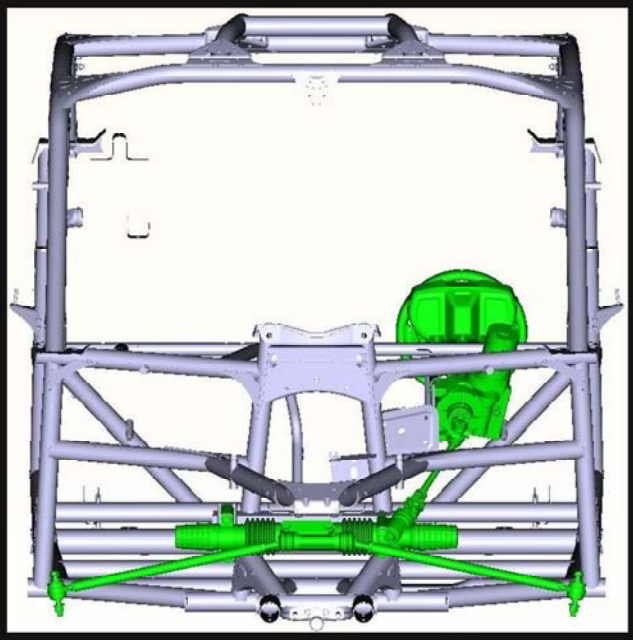

The new rack and pinion is of the center take-off type.

Steering

- Center take-off type rack and pinion

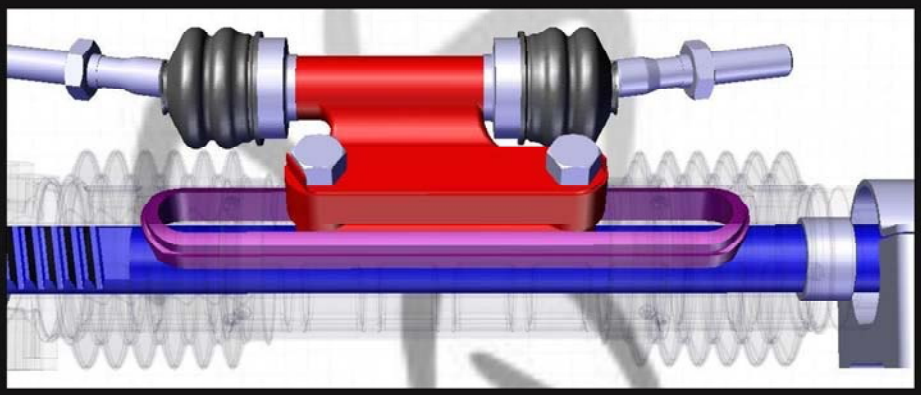

Let’s take a look at how its made inside.
The tie-rods attach directly to the slide shaft.

Steering

- Center take-off type rack and pinion

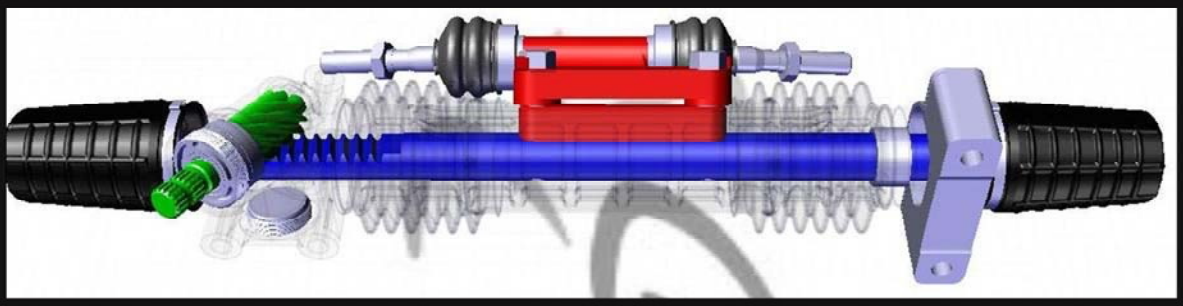

Which gets its movement from the spiral input gear precisely positioned to reduce backlash.

Steering

- DPS located inside cockpit for better protection from harsh environments

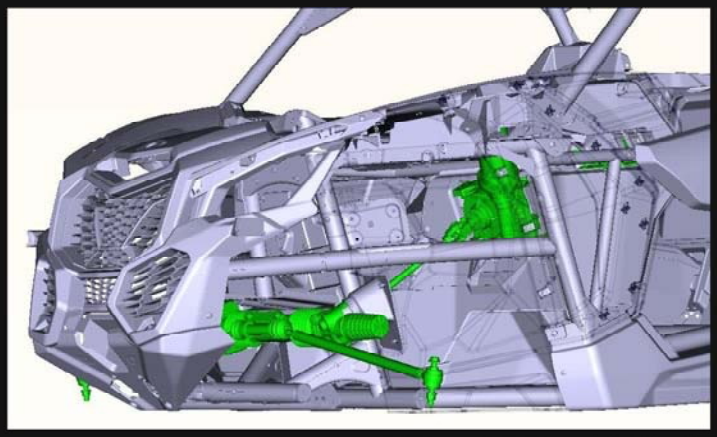

The DPS located inside cockpit for better protection from harsh environments

Steering

- DPS located inside cockpit for better protection from harsh environments

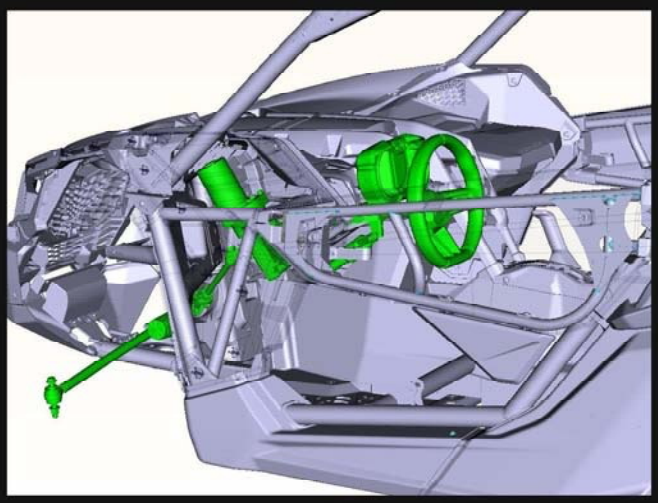

Steering

- DPS located inside cockpit for easy access

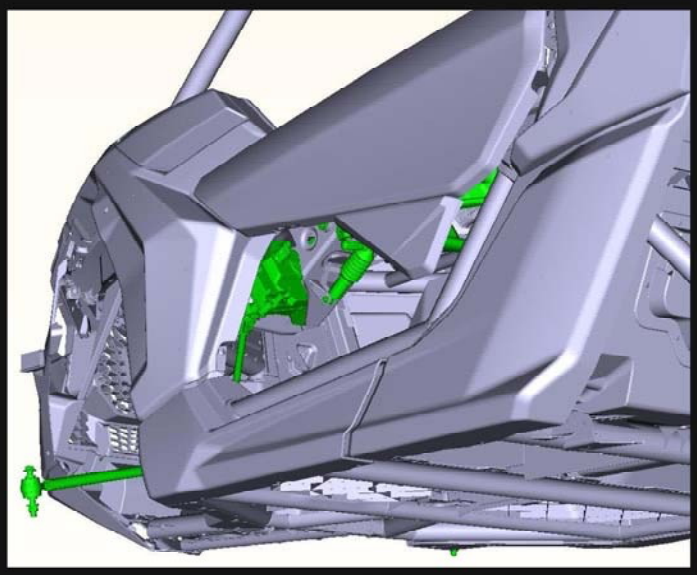

But is conveniently located inside cockpit for easy access for diagnostic.

Steering

- Serviceable threaded tie rods
- New outer-ball joint boot design for advanced sealing

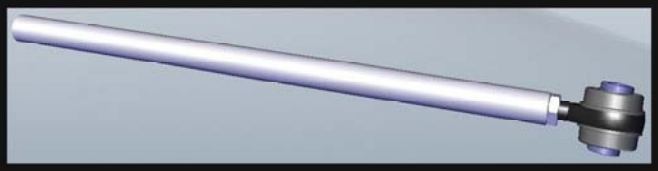

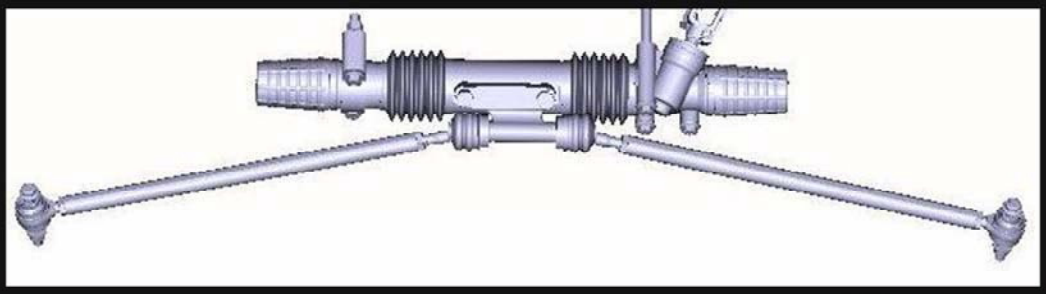

The tie rods are serviceable and the outer-ball joint boot has a new design for advanced sealing.

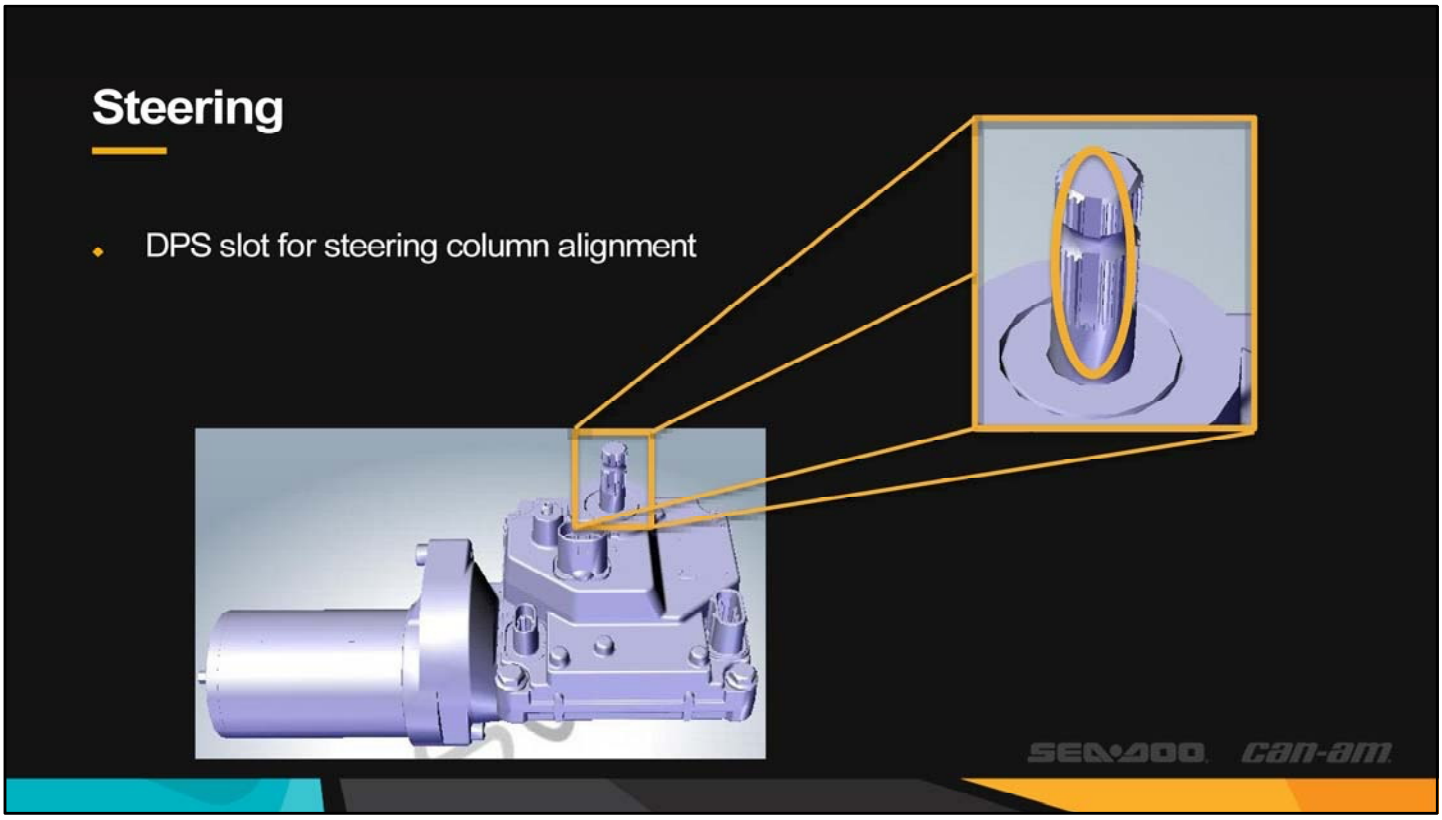

The DPS has a slot for steering column alignment.

Steering

- Steering column to DPS slot

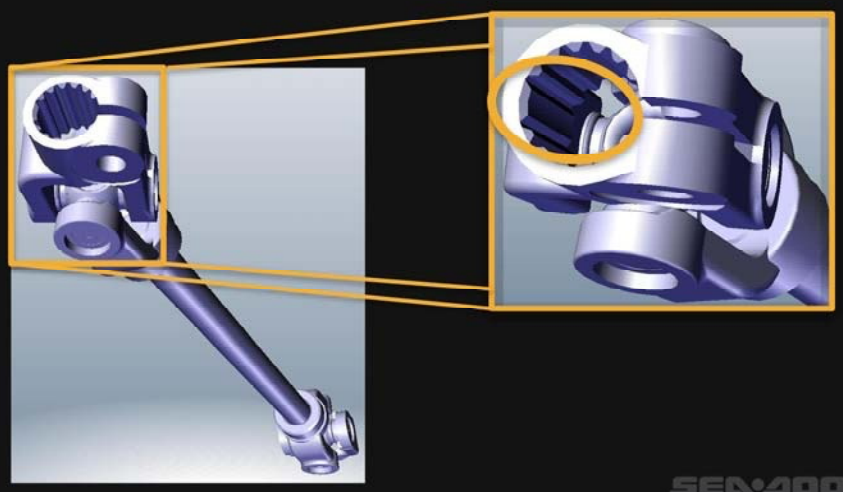

Steering

- Double u-joint steering column

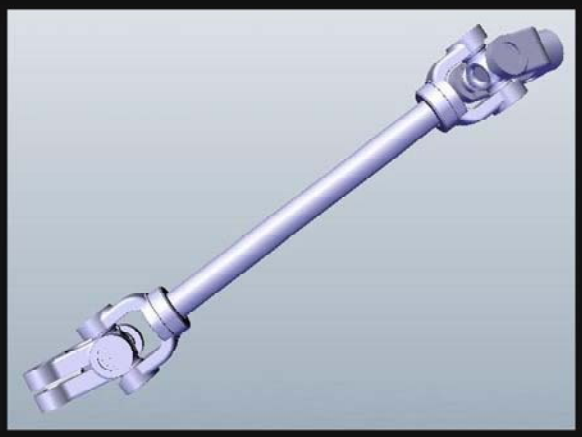

The steering column has 2 U-joints.

Brake

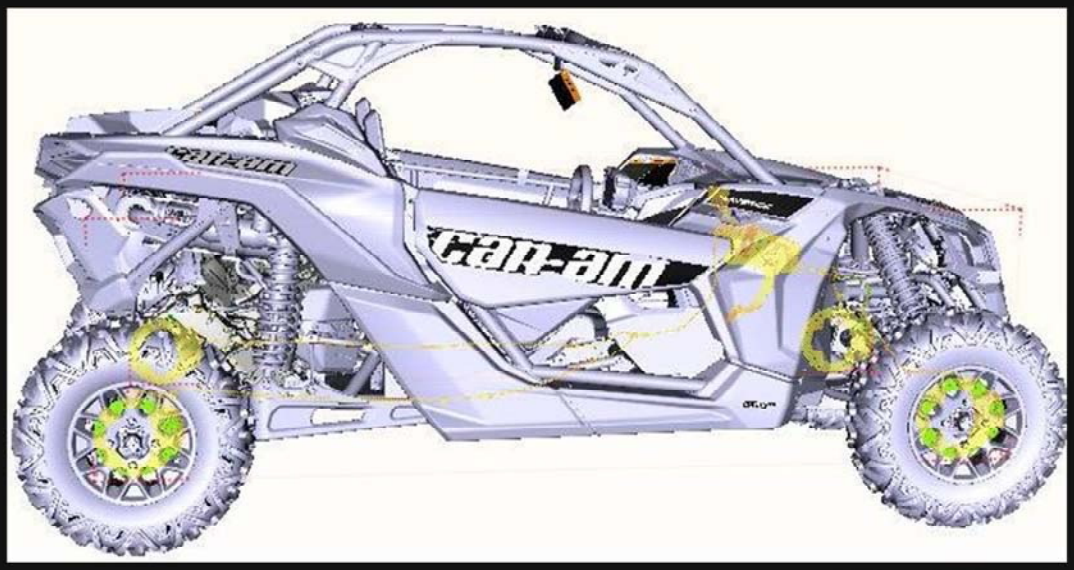

Moving on to the brake system.

Brake

- Floating calipers
  - Front : Twin pistons (32 mm)
  - Rear : Twin pistons (28 mm)
  - Sintered high performance brake pads

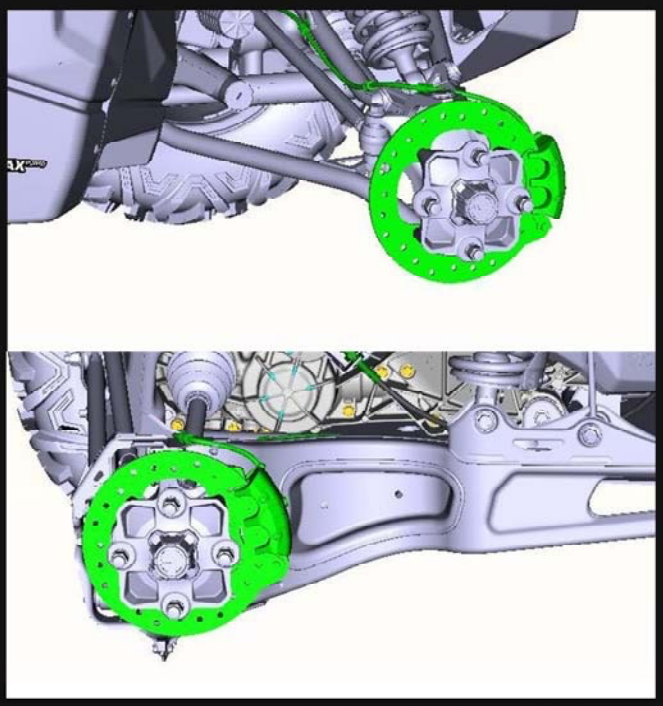

The Maverick X3 has floating calipers with twin pistons (32 mm) in the front and twin pistons (28 mm) in the rear which push on sintered high performance brake pads.

Brake

- Master cylinder located inside cockpit for better protection
  - High efficiency tandem master cylinder for easy bleeding
- Ball bearing pedal mechanism
  - Maintenance free pedal pivot

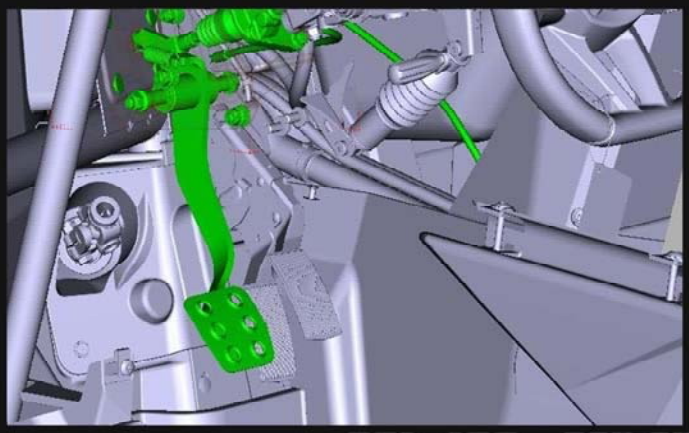

The Master cylinder is located inside cockpit for better protection. The high efficiency tandem master cylinder is easy to bleed.
The pedal mechanism uses a ball bearing which is maintenance free.

Brake

- Dual remote reservoirs in center console
  - Accessible through console panel

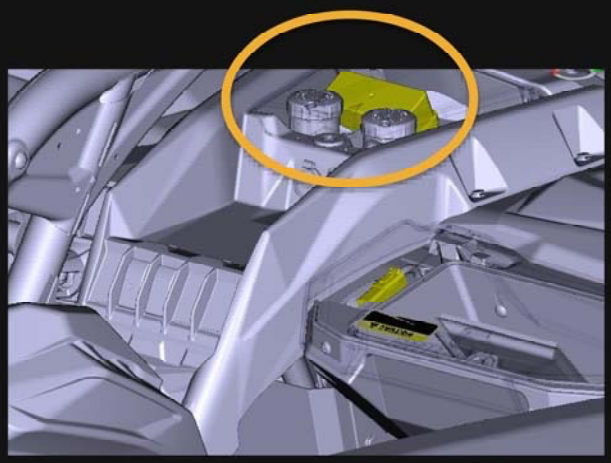

The dual remote reservoirs are accessible through the center console panel.

Front / Rear Drive Train

- Spiral bevel gear to decrease differential noise
  - Easy access to drain plug



Now for the front drive train.
The front differential uses the standard Visco-Lok system to reduce steering kick but uses spiral bevel gears to decrease differential noise.
Access to the drain plug is also very easy.

Front / Rear Drive Train

- M12 wheel studs

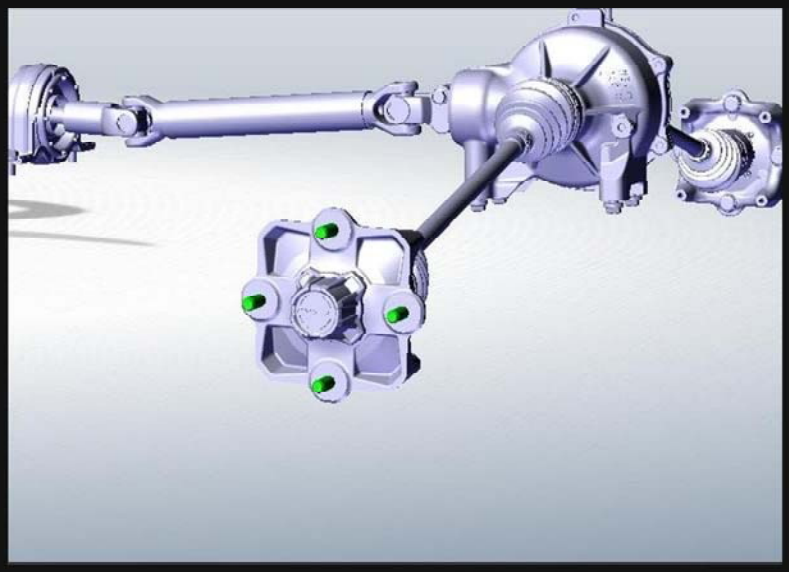

Hefty M12 wheel studs are used.

Front / Rear Drive Train

- Maintenance free propeller shaft U-joints

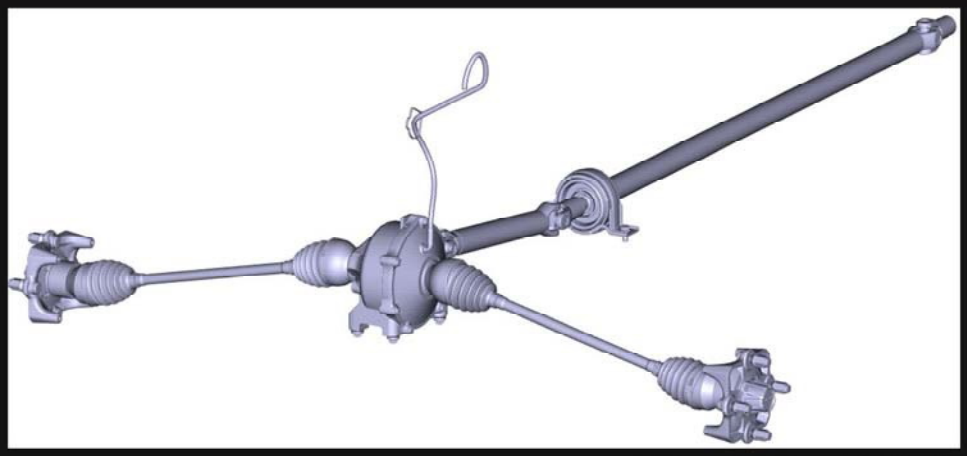

And the front prop shaft has maintenance-free U-joints.

Front / Rear Drive Train

- Fixed gear integrated to transmission
- No propeller shaft needed
- M12 wheel studs

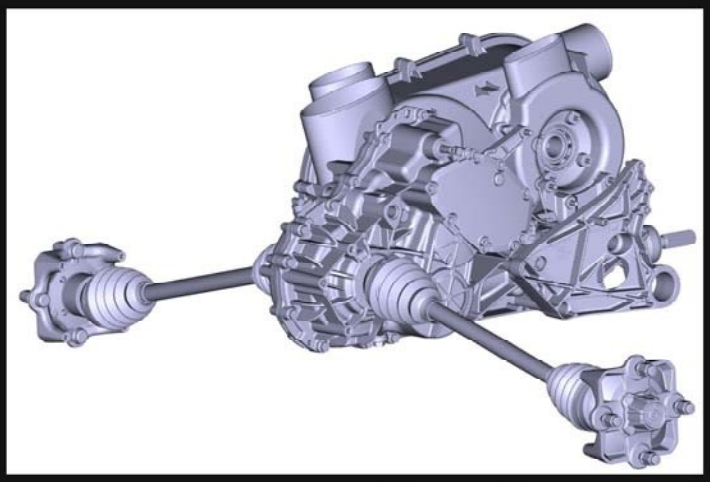

SEA-DOO can-am

As for the rear drive train, the Maverick X3 has a fixed gear integrated to the transmission which eliminates the need for a rear prop shaft allowing power transmission to be optimal.

Electrical

- LED front and rear signature lights
  - 85% power consumption decrease



On the electrical side, the distinct front and rear signature lights use LEDs to reduce power consumption up to 85% which allows other components to benefit.

Electrical

- Easy access to battery (behind passenger seat)

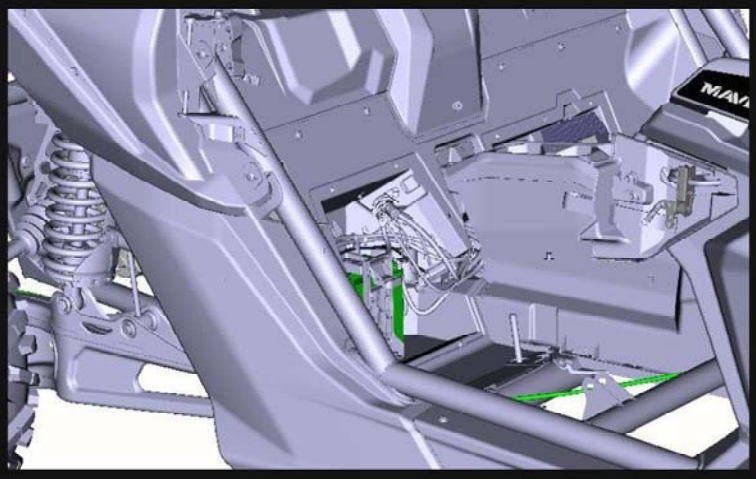

The battery is easily accessible from behind the passenger seat

Electrical

- Accessory terminal block
  - Under central console

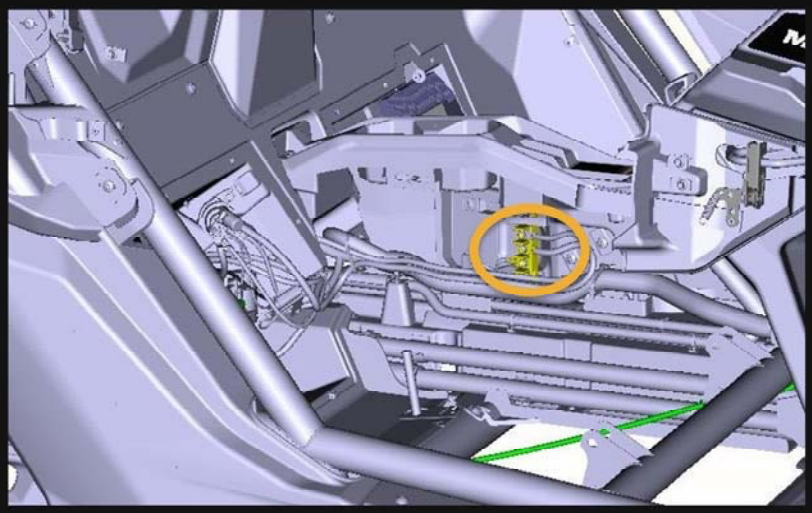

And the accessory terminal block is located under the central console on the right hand side.

Electrical

- True START-STOP button
  - Allows the electrical system to wake up with a short press
  - Starting or stopping the engine requires a long push
- RF key functions
  - Grey = Performance
    - Full engine power and speed
  - Green = Normal
    - Speed limit at 45 mph (70kmh) without engine power limitation

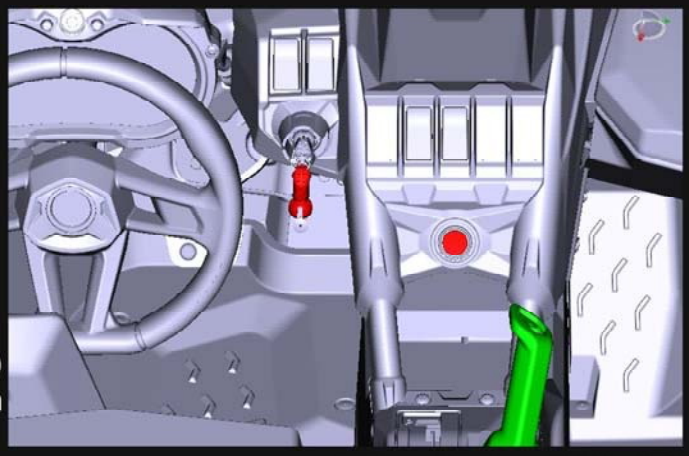

True START-STOP button allows the electrical system to wake up for 30 seconds with a short press or with the RF key to start or stop the engine with a long press.
There will be 2 RF keys available, performance or normal.
The grey performance key allows full engine power and vehicle speed where as the green normal key will limit engine speed to 45 mph without engine power limitation.

Fuel

- Tank located underneath RH dash panel
- Fuel tank fixed to the chassis using flexible straps
- Plastic tank and flexible filler neck
- Integrated roll over valve
- Tank capacity of 10.5 Gallon (40 L)

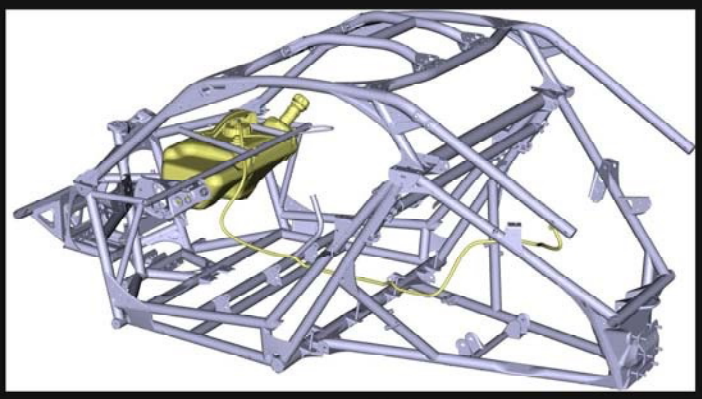

The fuel system is very simple, the 10.5 Gallon (40 L) tank is located underneath right hand side dash panel and is fixed to the chassis using flexible straps.
The plastic tank has an integrated roll over valve and uses a flexible filler neck.

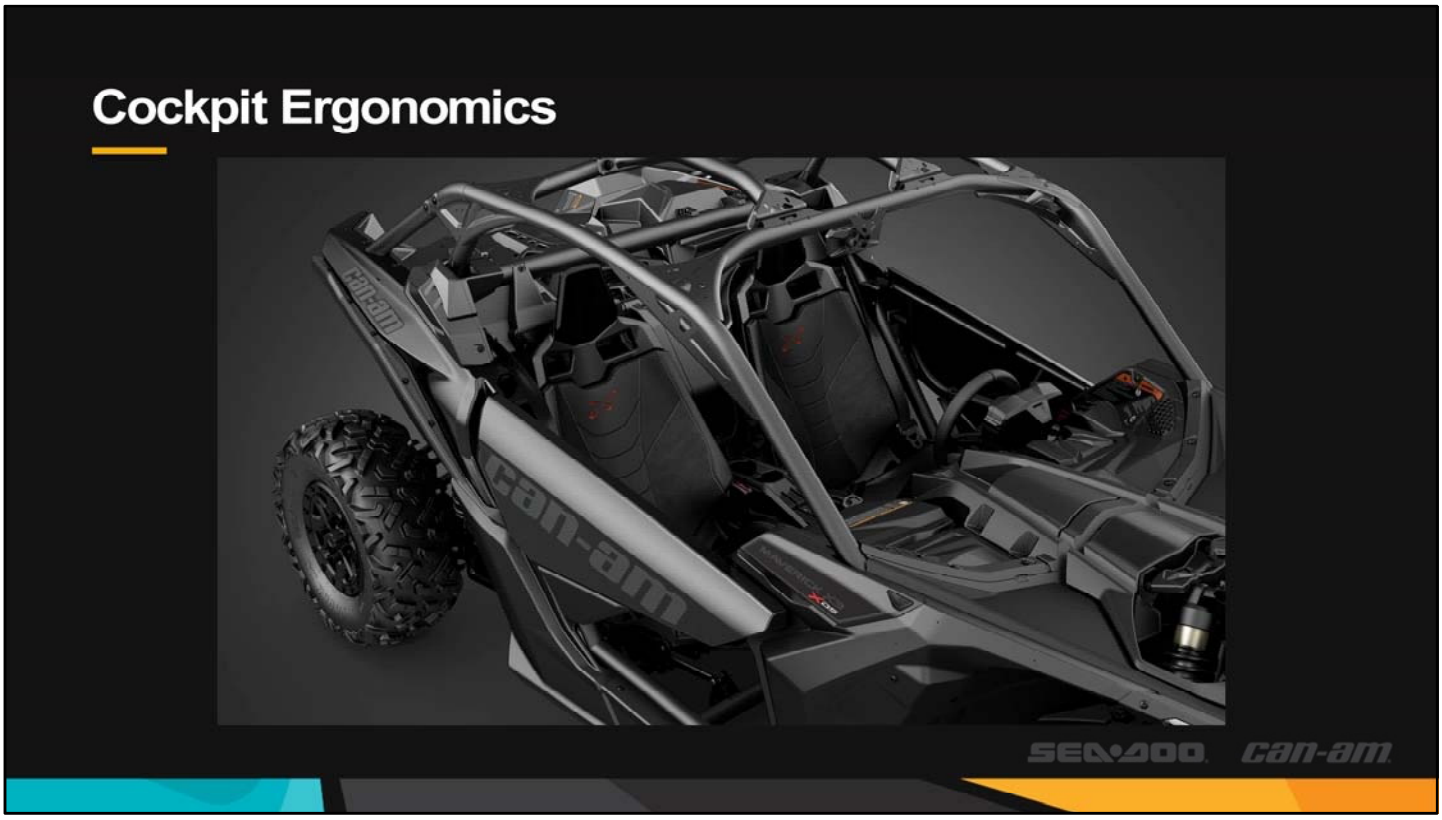

Now let’s take a closer look at the cockpit ergonomics.



Compared to the Maverick, the Maverick X3 has a lower seating position and longer wheelbase which increases comfort and confidence at higher speeds.

Cockpit Ergonomics

- Middle-focused seating position
- 44% front and 56% rear balance





SEA-DOO can-am

The middle-focused seating position plays a big role in the weight distribution thus stabilizing maneuverability.

Cockpit Ergonomics

- Centered accelerator and brake pedals
- Naturally-positioned passenger grab bars and angled footrests





The driver benefits from centered accelerator and brake pedals and the passenger has naturally-positioned grab bars and angled footrests.

Cockpit Ergonomics

- One-piece molded ErgoPrint seats
- Removable cushions
- Four-way seat adjustment

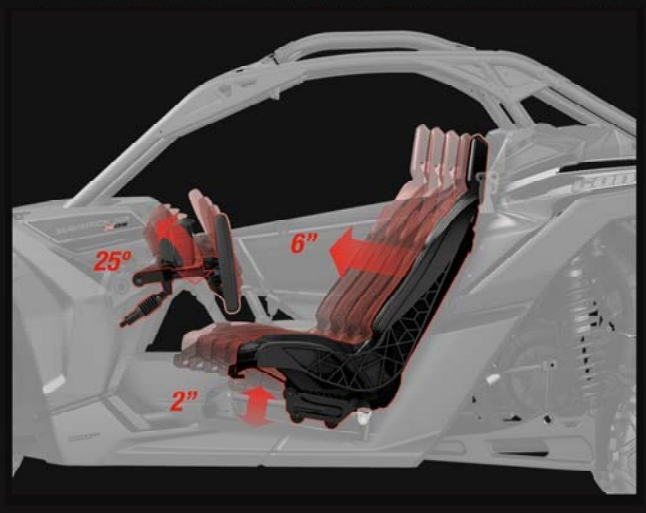

The seats are made of one-piece molded ErgoPrint and have removable cushions for easy cleaning.
The seats are adjustable in four-ways.

Cockpit Ergonomics

- Forward/backward adjustment system

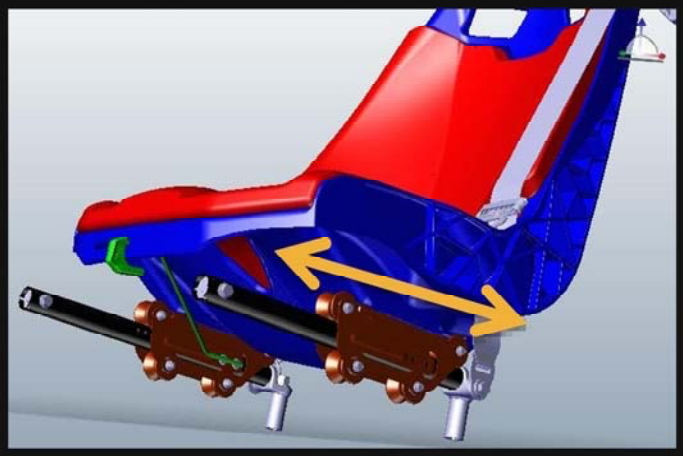

The forward/backward adjustment is achieved by pushing the release tab and sliding the seat on the tubes.

Cockpit Ergonomics

- Mud proof and maintenance free

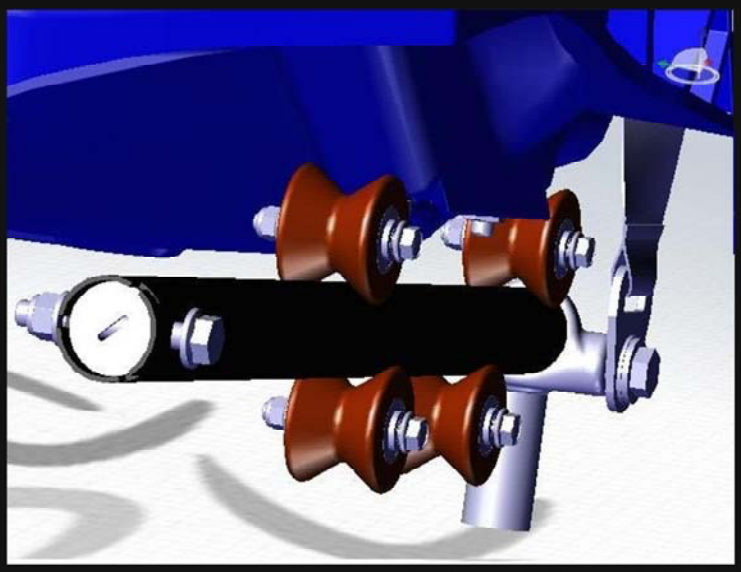

A closer look at the roller system shows they have maintenance-free sealed bearings and function in a way to cut through the mud effortlessly.

Cockpit Ergonomics

- 2” height adjustment
  - Tools required

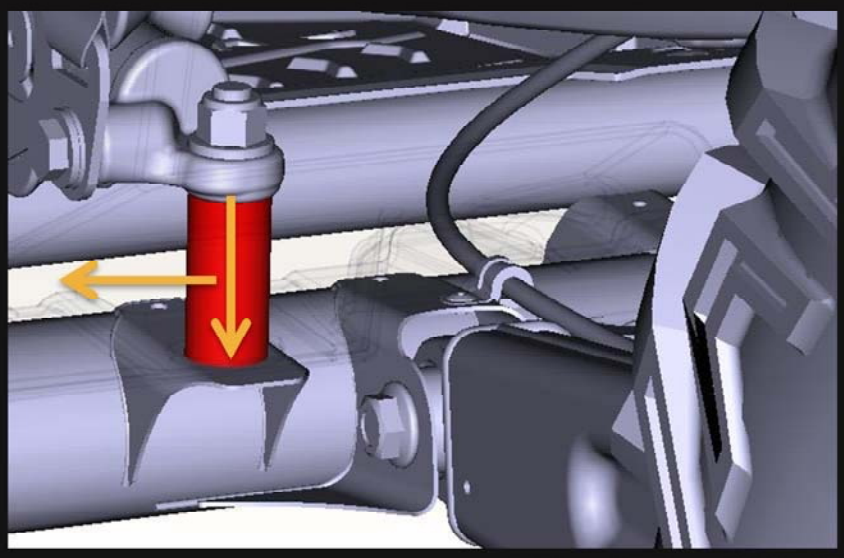

In order to lower the height of the seat, it is necessary to move the front bolts to the hole below and remove the bushing on the rear section.

Ease of Maintenance

- Central console to access brake fluid and fuses
- Glovebox access for diagnostic connector



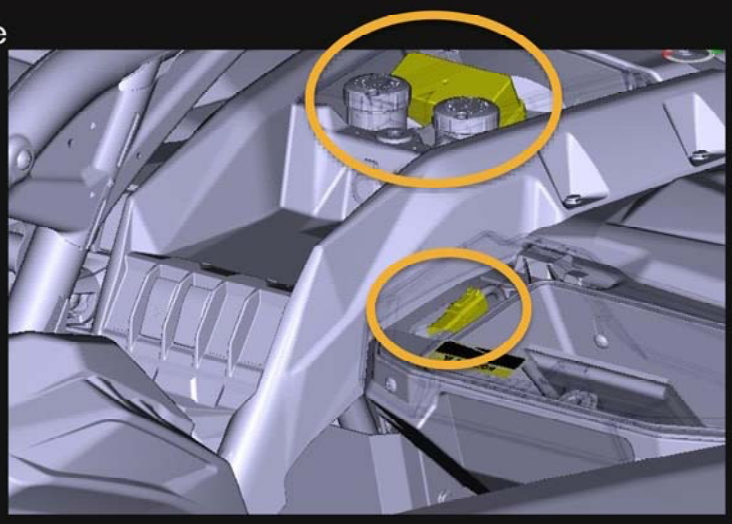

Let's talk about how easy the Maverick X3 is to service and maintain.
1st, the easily accessible brake fluid and fuses are under the central console and open the glovebox to access the diagnostic connector.

Ease of Maintenance

- Snap fitted maintenance panel for access to:
  - CVT pre-filter
  - Coolant expansion tank



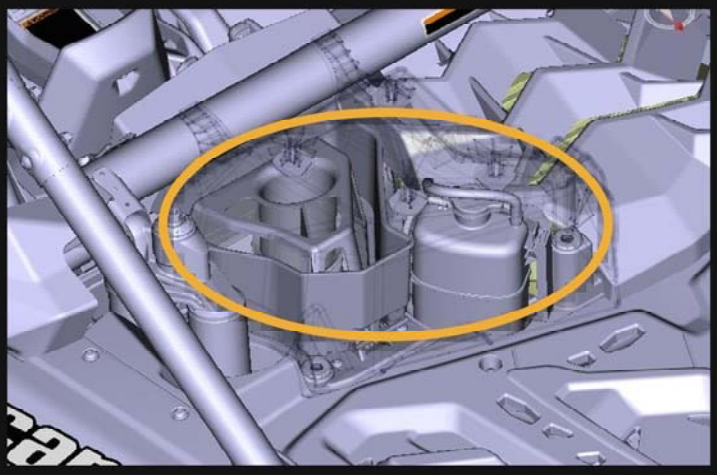

On the rear we have a snap fitted maintenance panel to access the CVT pre-filter and coolant expansion tank.

Ease of Maintenance

- Snap fitted maintenance panel for access to engine intercooler



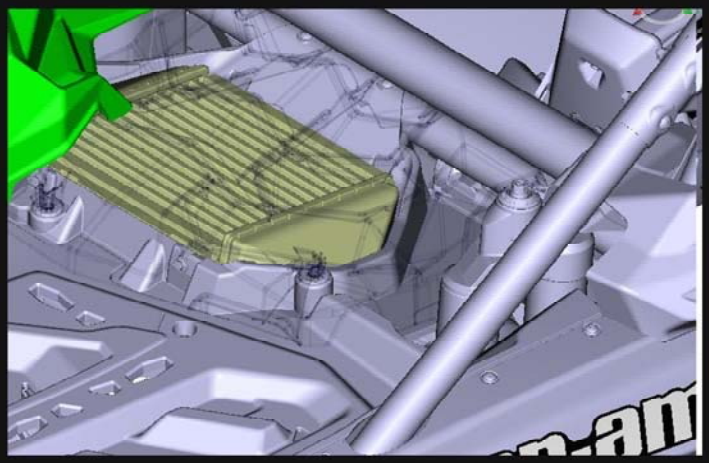

Right next to that you'll find the snap fitted maintenance panel for access to the engine intercooler.

Ease of Maintenance

- Fuel pump access

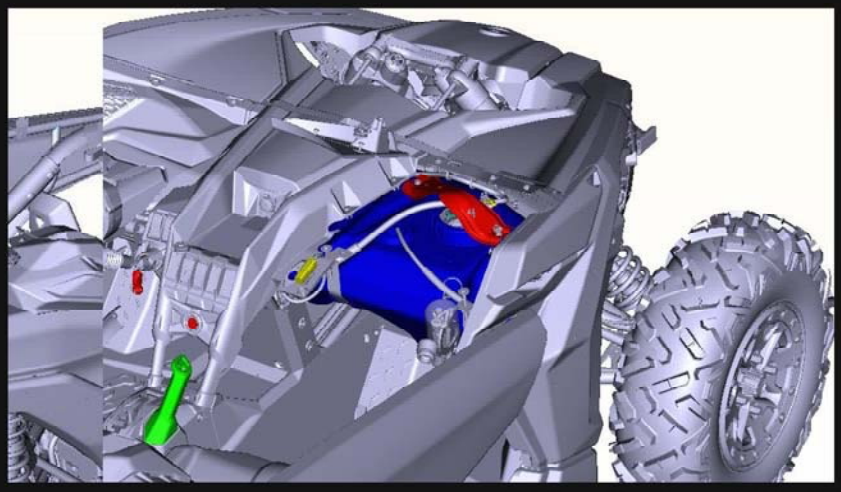

The fuel pump is easily accessible by simply removing a few screws and darts.

Ease of Maintenance

Service Certified

- Hydraulic valve lifter bucket (no valve adjustment)
- Easy access to engine and gearbox drain plugs
- Dipstick for gearbox oil level
- Easy access for shifter cable adjustment on right hand side of engine compartment



SEA-DOO can-am

The 900cc ACE Rotax engine has hydraulic valve lifter buckets which mean no valve adjustment is needed.

Ease of Maintenance

Service Certified

- Hydraulic valves (no valve adjustment)
- Easy access to engine and gearbox drain plugs
- Dipstick for gearbox oil level
- Easy access for shifter cable adjustment on right hand side of engine compartment

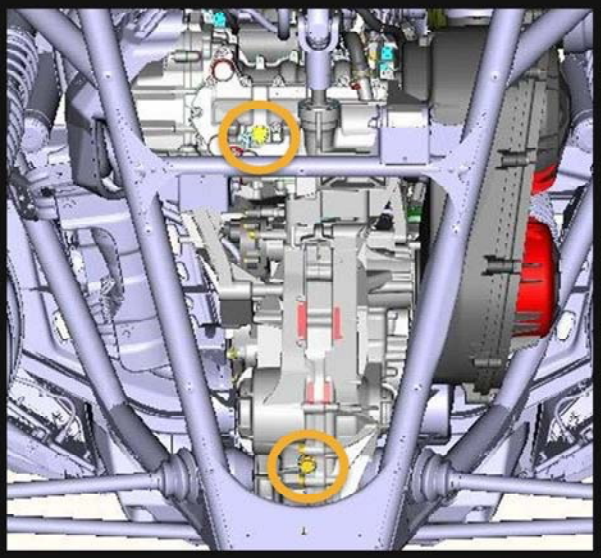

SEA-DOO can-am

The engine and gearbox drain plugs are easy to access.

Ease of Maintenance

Service Certified

- Hydraulic valves (no valve adjustment)
- Easy access to engine and gearbox drain plugs
- Dipstick for gearbox oil level
- Easy access for shifter cable adjustment on right hand side of engine compartment

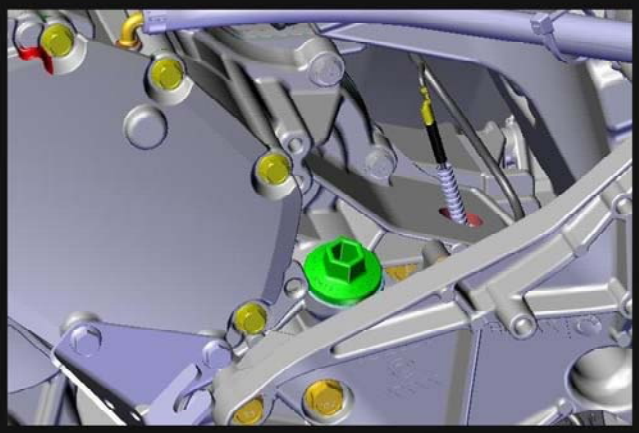

SEA-DOO can-am

The dipstick for gearbox oil level is conveniently placed on the right hand side

Ease of Maintenance

Service Certified

- Hydraulic valves (no valve adjustment)
- Easy access to engine and gearbox drain plugs
- Dipstick for gearbox oil level
- Easy access for shifter cable adjustment on right hand side of engine compartment

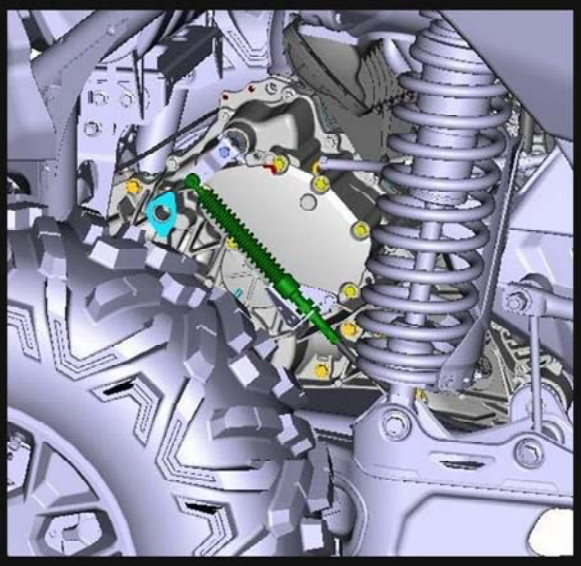

SEA-DOO can-am

And easy access to the shifter cable adjustment on right hand side of engine compartment

Ease of Maintenance

Service Certified

- Easy engine access
  - 15 minute rear sub-section removal



SEA-DOO can-am

A great feature is that the entire rear section of the unit can be easily taken off, within 15 minutes, as a module to access engine components.

Crate

- Metal base
  - Fully enclosed forklift channels
  - Easily stackable after vehicle removal

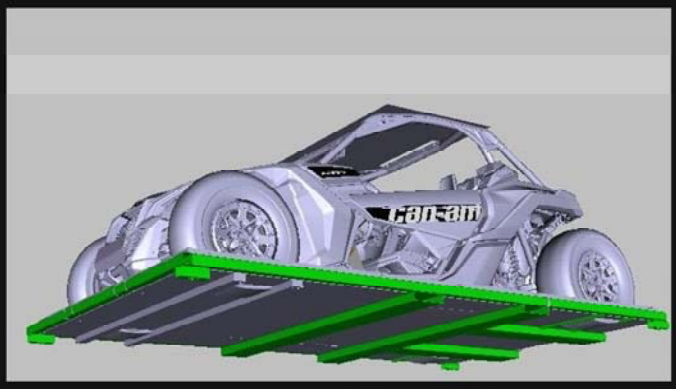

SEA-DOO can-am

The Maverick X3 will come in a crate that has a metal base, this base will have fully enclosed forklift channels.

Crate

- Metal base
  - Forks MUST be inserted in the channels to avoid damaging the unit

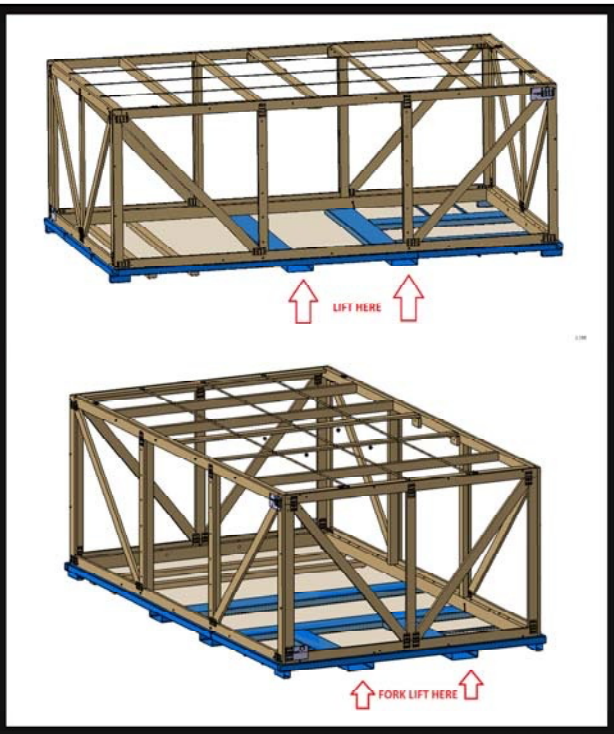

It will be very important for your staff to use the forklift channels to manipulate the crate to avoid any damage to the unit.

Crate

- Vehicle is fully assembled to reduced PDI time (approx. 1 1/4 hr):
  - Suspension strapped in compressed position
  - Wheels already installed

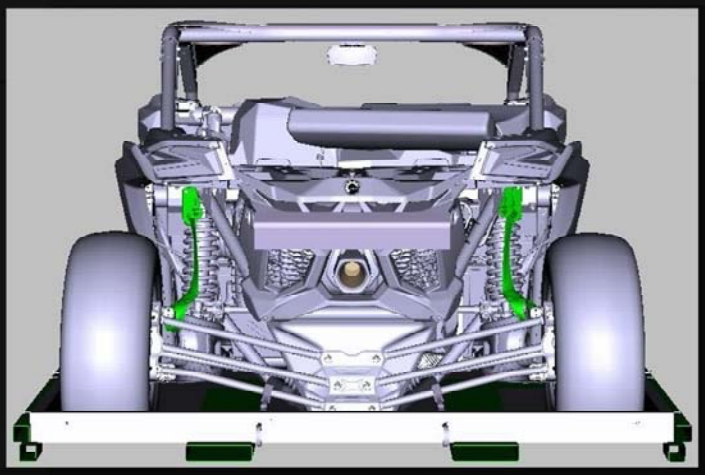

The unit will be fully assembled allowing the entire PDI procedure to be approximately 1h1/4.
The suspension will be strapped down and the wheels will be installed.



Thank you for taking the time to view this technical presentation.

2017

Operator's Guide

Includes
Safety, Vehicle
and Maintenance Information



MAVERICK™ X3 Series

⚠ WARNING

Read this guide thoroughly. It contains important safety information.
Minimum age: Operator: 16 or older with a valid driver's license. Keep this Operator's Guide in the vehicle.

2 1 9 0 0 1 8 8 4

Original Instructions

⚠ WARNING

YOUR VEHICLE CAN BE HAZARDOUS TO OPERATE. A collision or rollover can occur quickly, if you fail to take proper precautions, even during routine maneuvers such as turning and driving on hills or over obstacles.
For your safety, understand and follow all the warnings contained in this Operator's Guide and on the labels on your vehicle. **Failure to follow these warnings can result in SEVERE INJURY OR DEATH!**
Keep this Operator's Guide with the vehicle at all times.

⚠ WARNING

Disregarding any of the safety precautions and instructions contained in this Operator's Guide, *SAFETY VIDEO* and on-product safety labels could result in severe injury including the possibility of death!

⚠ WARNING

This vehicle may exceed the performance of other vehicles you may have ridden in the past. Take time to familiarize yourself with your new vehicle.

CALIFORNIA PROPOSITION 65 WARNING

⚠ WARNING

This vehicle contains or emits chemicals known to the state of California to cause cancer and birth defects or other reproductive harm.

This document contains the trademark of the following companies:
† Visco-Lok is a trademark of GKN Viscodrive GmbH.
† QS3 is a trademark of Fox Factory, Inc.

FOREWORD

Deutsch	Dieses Handbuch ist möglicherweise in Ihrer Landessprache verfügbar. Bitte wenden Sie sich an Ihren Händler oder besuchen Sie: **www.operatorsguides.brp.com**
English	This guide may be available in your language. Check with your dealer or go to: **www.operatorsguides.brp.com**
Español	Es posible que este manual esté disponible en su idioma. Consulte a su distribuidor o visite: **www.operatorsguides.brp.com**
Français	Ce guide peut être disponible dans votre langue. Vérifier avec votre concessionnaire ou aller à: **www.operatorsguides.brp.com**
日本語	このガイドは、言語によって翻訳版が用意されています。. ディーラーに問い合わせるか、次のアドレスでご確認ください： **www.operatorsguides.brp.com**
Nederlands	Deze handleiding kan beschikbaar zijn in uw taal. Vraag het aan uw dealer of ga naar: **www.operatorsguides.brp.com**
Norsk	Denne boken kan finnes tilgjengelig på ditt eget språk. Kontakt din forhandler eller gå til: **www.operatorsguides.brp.com**
Português	Este manual pode estar disponível em seu idioma. Fale com sua concessionária ou visite o site: **www.operatorsguides.brp.com**
Suomi	Käyttöohjekirja voi olla saatavissa omalla kielelläsi. Tarkista jälleenmyyjältä tai käy osoitteessa: **www.operatorsguides.brp.com**
Svenska	Denna bok kan finnas tillgänglig på ditt språk. Kontakta din återförsäljare eller gå till: **www.operatorsguides.brp.com**

Congratulations on your purchase of a new Can-Am® side-by-side vehicle. It's backed by the BRP limited warranty and a network of authorized Can-Am dealers ready to provide the parts, accessories or service you may require.

At delivery, you were informed of the warranty coverage and signed the *PREDELIVERY CHECK LIST* to ensure your new vehicle was prepared to your entire satisfaction.

Your dealer is committed to your satisfaction. If you need more information, please ask your dealer.

Know Before you Go

To learn how to reduce the risk of accident for you or bystanders, read this Operator's Guide before you operate the vehicle.

Also, read all safety labels on your vehicle and watch the *SAFETY VIDEO*.

Failure to follow the warnings contained in this Operator's Guide can result in SERIOUS INJURY or DEATH.

Safety Messages

The types of safety messages, what they look like and how they are used in this guide are explained as follows:

The safety alert symbol ⚠ indicates a potential injury hazard.

⚠ WARNING

Indicates a potential hazard which, if not avoided, could result in serious injury or death.

CAUTION Indicates a hazardous situation which, if not avoided, could result in minor or moderate injury.

NOTICE Indicates an instruction which, if not followed, could result in severely damaged vehicle components or other property.

About this Operator's Guide

This Operator's Guide has been prepared to acquaint the owner/operator of a new vehicle with the various vehicle controls, maintenance and safe operating instructions. It is indispensable for the proper use of the product.

Keep this Operator's Guide in the vehicle as you can refer to it for things such as maintenance, troubleshooting and instructing others.

Note that this guide is available in several languages. In the event of any discrepancy, the English version shall prevail.

If you want to view and/or print an extra copy of your Operator's Guide, simply visit the following website www.operatorsguides.brp.com.

The information contained in this document is correct at the time of publication. BRP, however, maintains a policy of continuous improvement of its products without imposing upon itself any obligation to install them on products previously manufactured. Due to late changes, some differences between the manufactured product and the descriptions and/or specifications in this guide may occur. BRP reserves the right at any time to discontinue or change specifications, designs, features, models or equipment without incurring any obligation upon itself.

This Operator's Guide and the *SAFETY DVD* should remain with the vehicle when it is sold.

TABLE OF CONTENTS

FOREWORD **1**
Know Before you Go 1
Safety Messages 1
About this Operator's Guide 2

SAFETY INFORMATION

GENERAL PRECAUTIONS **8**
Avoid Carbon Monoxide Poisoning 8
Avoid Gasoline Fires and Other Hazards 8
Avoid Burns from Hot Parts 8
Accessories and Modifications 8
SAFE OPERATION - RESPONSIBILITIES **9**
Owner - Be Responsible 9
Operator - Be Qualified and Responsible 9
Riding Carefully 10
Occupant Restraint System 10
Terrain Condition 10
PRE-RIDE INSPECTION **12**
Pre-Ride Inspection Check List 12
PREPARE TO RIDE **15**
Before you Ride 15
Riding Gear 15
AVOID ACCIDENTS **17**
Avoid Rollovers and Tipovers 17
Avoid Collisions 18
RIDING YOUR VEHICLE **19**
Practice Exercises 19
Off-Road Operation 20
General Riding Techniques 20
MOVING LOADS AND DOING WORK **25**
Working with your Vehicle 25
Carrying Loads 25
IMPORTANT ON-PRODUCT LABELS **28**
Hang Tag 28
Safety Labels 28
Compliance Labels 37
Technical Information Labels 37

VEHICLE INFORMATION

PRIMARY CONTROLS **40**
1) Steering Wheel 40
2) Accelerator Pedal 41

PRIMARY CONTROLS (cont'd)
3) Brake Pedal 41
4) Shift Lever 41
SECONDARY CONTROLS 43
1) RF D.E.S.S Key and RF D.E.S.S. Post 43
2) Engine Start/Stop Button 44
3) Low/High Beam Headlight Switch 44
4) 2WD/4WD Switch 45
5) Sport/ECO Mode Switch 45
6) Override Switch 45
7) DPS Switch 46
MULTIFUNCTION GAUGE (ANALOG/DIGITAL) 47
Multifunction Gauge Description 47
Gauge Setup 51
EQUIPMENT 52
1) Tilt Steering 53
2) Cup Holders 53
3) Passenger Handholds 54
4) Glove Box 54
5) Tool Kit 54
6) Footrests 54
7) Doors 55
8) Seat Belts 55
9) Driver's Seat 56
10) Passenger Seat 58
11) Fuel Reservoir Cap 59
12) Cargo Rack 59
13) Recovery Hook 59
14) Wheel Scraper 60
15) 12-Volt Power Outlet 60
16) Central Mirror 60
TUNE YOUR RIDE 62
Suspension Adjustment Guidelines 62
Suspension Factory Settings 63
Suspension Adjustments 64
DPS Function 67
FUEL 68
Fuel Requirements 68
Vehicle Fueling Procedure 68
Fueling a Gasoline Container 69
BREAK-IN PERIOD 70
Operation During Break-In 70
BASIC PROCEDURES 71
Starting the Engine 71
Waking Up the Electrical System 71
Shifting the Transmission 71

BASIC PROCEDURES (cont'd)
Choosing the Correct Range (Low or High) 71
Stopping the Engine and Parking the Vehicle 72
Tips for Maximizing Drive Belt Durability 73
SPECIAL PROCEDURES 74
What to do if Water is Suspected to be in the CVT 74
What to do if Battery is Drained out 74
What to do if Vehicle Rolled Over 74
What to do if Vehicle is Submerged 74
TRANSPORTING THE VEHICLE 75
LIFTING AND SUPPORTING THE VEHICLE 77
Front of Vehicle 77
Rear of Vehicle 77

MAINTENANCE

MAINTENANCE SCHEDULE 80
SEVERE DUSTY CONDITIONS 80
MAINTENANCE SCHEDULE LEGEND 80
MAINTENANCE SCHEDULE 81
MAINTENANCE PROCEDURES 83
Engine Air Filter 83
Front Grille Kit 84
CVT Air Filters 84
Engine Oil 85
Oil Filter 87
Radiator 88
Engine Coolant 88
Muffler Spark Arresters 91
Gearbox Oil 91
Spark Plugs 93
CVT Cover 95
Drive Belt 96
Drive and Driven Pulleys 97
Battery 98
Fuses 98
Lights 99
Drive Shaft Boot 100
Wheel Bearing 100
Wheels and Tires 101
Suspensions 104
Brakes 105
Seat Belts 106
VEHICLE CARE 107
Post-Operation Care 107
Vehicle Cleaning and Protection 107

STORAGE AND PRESEASON PREPARATION 108

TECHNICAL INFORMATION

VEHICLE IDENTIFICATION 110
Vehicle Identification Number 110
Engine Identification Number 110
Radio Frequency Digitally Encoded Security System (RF D.E.S.S. key) .. 110
NOISE EMISSION CONTROL SYSTEM REGULATION 111
EC-DECLARATION OF CONFORMITY 112
SPECIFICATIONS 113

TROUBLESHOOTING

TROUBLESHOOTING GUIDELINES 122
MESSAGES IN MULTIFUNCTION GAUGE 126

WARRANTY

BRP LIMITED WARRANTY USA AND CANADA: 2017 CAN-AM® SSV 128
US EPA EMISSION-RELATED WARRANTY 131
BRP INTERNATIONAL LIMITED WARRANTY: 2017 CAN-AM® SSV 134
BRP LIMITED WARRANTY FOR THE EUROPEAN ECONOMIC AREA, THE COMMONWEALTH OF THE INDEPENDANT STATES AND TURKEY: 2017 CAN-AM® SSV 138

CUSTOMER INFORMATION

PRIVACY INFORMATION 144
CONTACT US 145
North America 145
Europe 145
Oceania 145
South America 145
Asia 145
CHANGE OF ADDRESS/OWNERSHIP 146

SAFETY INFORMATION

GENERAL PRECAUTIONS

Avoid Carbon Monoxide Poisoning

All engine exhaust contains carbon monoxide, a deadly gas. Breathing carbon monoxide can cause headaches, dizziness, drowsiness, nausea, confusion and eventually death.

Carbon monoxide is a colorless, odorless, tasteless gas that may be present even if you do not see or smell any engine exhaust. Deadly levels of carbon monoxide can collect rapidly, and you can quickly be overcome and unable to save yourself. Also, deadly levels of carbon monoxide can linger for hours or days in enclosed or poorly ventilated areas. If you experience any symptoms of carbon monoxide poisoning, leave the area immediately, get fresh air and seek medical treatment.

To prevent serious injury or death from carbon monoxide:

- Never run the vehicle in poorly ventilated or partially enclosed areas such as garages, carports or barns. Even if you try to ventilate engine exhaust with fans or open windows and doors, carbon monoxide can rapidly reach dangerous levels.
- Never run the vehicle outdoors where engine exhaust can be drawn into a building through openings such as windows and doors.

Avoid Gasoline Fires and Other Hazards

Gasoline is extremely flammable and highly explosive. Fuel vapors can spread and be ignited by a spark or flame many feet away from the engine. To reduce the risk of fire or explosion, follow these instructions:

- Use only an approved gasoline container to store fuel.
- Never fill the gasoline container on the vehicle - an electrical static discharge may ignite the fuel.
- Never carry gasoline container(s) or any dangerous liquids on the cargo rack unless it is designed and approved for this vehicle.
- Strictly adhere to instructions in *FUELING PROCEDURE*.
- Never start or operate the engine if the fuel cap is not properly installed.

Gasoline is poisonous and can cause injury or death.

- Never siphon gasoline by mouth.
- If you swallow gasoline, get any in your eye(s), or inhale gasoline vapor, see a doctor immediately.

If gasoline spills on you, wash with soap and water and change your clothes.

Avoid Burns from Hot Parts

Certain components become hot during operation. Avoid contact with those parts during and shortly after operation to avoid burns.

Accessories and Modifications

Do not make unauthorized modifications, or use attachments or accessories that are not approved by BRP. Since these changes have not been tested by BRP, they may increase the risk of crash or injury, and can render the vehicle illegal. For example, modifications such as different tires can affect handling of the vehicle and increase risk of a crash.

See your authorized Can-Am dealer for available accessories for your vehicle.

SAFE OPERATION - RESPONSIBILITIES

This is a high performance off-road vehicle. Operators must be responsible and use care to avoid rollovers, tipovers, collisions, and other accidents. Even with vehicle safety features (such as protective structure, seat belts, doors) and protective gear (such as a helmet), there is always a risk of injury or death in these accidents. To reduce the risk of serious injury or death, follow the rules in this section.

Owner - Be Responsible

Read this Operator's Guide and watch the *SAFETY VIDEO*.

Always inspect and confirm the safe operating condition of your vehicle prior to ride. Always follow the maintenance schedule described in this Operator's Guide.

Never allow anyone to operate your vehicle unless they are responsible and can be trusted with a high performance vehicle. Consider supervising new or young operators and setting rules and limits (e.g., whether they can carry a passenger, what they may do with the vehicle, where they may ride, etc.) for anyone using your vehicle.

Select the appropriate key (see *RF D.E.S.S KEY AND RF D.E.S.S. POST*) based on the operator's experience, vehicle use and environment.

Discuss the safety information with anyone who will be using the vehicle. Be sure that all operators and passengers meet the qualifications below and agree to follow the safety information. Help users become familiar with the vehicle.

We encourage you to have an Annual Safety Inspection of your vehicle. Please contact an authorized BRP dealer for further details. Though not required, it is recommended that an authorized BRP dealer performs the preseason preparation of your vehicle. Each visit to your authorized BRP dealer is a great opportunity for your dealer to verify if your vehicle is included in any safety campaign. We also urge you to visit your authorized BRP dealer in a timely manner if you become aware of any safety related campaigns.

Operator - Be Qualified and Responsible

Read this Operator's Guide and watch the *SAFETY VIDEO*.

Become completely familiar with the operational controls and the general operation of the vehicle.

Get familiar with this Off-Highway Vehicle (OHV); it may exceed the performance of other OHV you may have ridden. This is a high performance vehicle. Inexperienced riders may overlook risks and be surprised by the specific behavior of this vehicle in any terrain condition.

Take a training course if available (contact an authorized Can-Am dealer to find out about training course availability as well as on the internet at http://www.rohva.org/), and perform the practice exercises in *PRACTICE EXERCISES* section. Practice driving in a suitable area free of hazards and feel the response of each control. Drive at low speeds. Higher speeds require greater experience, knowledge and suitable riding conditions.

Be at least 16 years of age.

Be tall enough to be properly seated: back against the backrest with the seat belt fastened, to hold the steering wheel with both hands and still be able to reach the full stroke of brake and accelerator pedals with the right foot and to firmly plant left foot on the footrest.

Have a proper driver's license in accordance with local laws.

Never use this vehicle with drugs or alcohol, or if tired or ill. These slow reaction time and impair judgment.

Carrying Passenger

Only carry one passenger. The passenger must be properly seated in the cockpit.

The passenger must be tall enough to always be properly seated: back against the backrest with seat belt fastened, holding both handholds, and feet firmly planted - right foot on the footrest and the left foot on the vehicle floor.

Never carry a passenger who has used drugs or alcohol, or is tired or ill. These slow reaction time and impair judgment.

Instruct the passenger to read the vehicle's safety labels.

Never carry a passenger if you judge his ability or judgement insufficient to concentrate on the terrain conditions and adapt accordingly. More specifically for side-by-side vehicles, the passenger must also pay constant attention to the terrain ahead and be able to brace for bumps.

Riding Carefully

- This vehicle handles differently from other vehicles. A collision or rollover can occur quickly, during abrupt maneuvers such as doing sharp turns, acceleration or deceleration and driving on hills or over obstacles, if you fail to take proper precautions.
- Never operate at excessive speeds. Always go at a speed that is proper for the terrain, visibility, and operating conditions, and your experience.
- Never attempt jumps, side slides, donuts or any other stunts.
- Never attempt rapid acceleration or deceleration when performing a sharp turn. This may result in a roll over.
- Never attempt skidding or sliding. If vehicle starts to skid or slide, counter steer in the direction of skidding or sliding. On extremely slippery surfaces, such as ice, go slowly and be very cautious in order to reduce the chance of skidding out of control.
- Always be sure there are no obstacles or people behind the vehicle when you operate in reverse. Pay attention to blind spots. When it is safe to proceed in reverse, go slowly.
- Never exceed the stated load limits for this vehicle. Reduce speed, allow for greater braking distance and follow other instructions in *MOVING LOADS AND DOING WORK* subsection.
- Always remember that this vehicle is heavy! Its pure weight alone may entrap you should it tip or rollover.

Occupant Restraint System

- This vehicle is designed to carry one driver and one passenger, both wearing proper protective gears (refer to *RIDING GEAR* in this section).
- The driver and passenger must latch the doors and wear the seat belts at all times when riding.

Terrain Condition

- This vehicle is not designed to ride on paved surfaces; if you must shortly use the vehicle on such surfaces, avoid abrupt inputs to steering wheel, accelerator and brake pedals.
- Always go slowly and be extra careful when operating on unfamiliar terrain. Always be alert to changing terrain conditions when operating this vehicle. Take the time to learn how the vehicle performs in different environments.

- Never operate on excessively rough, slippery or loose terrain until you have learned and practiced the skills necessary to control this vehicle on such terrain. Always be especially cautious on these kinds of terrain.
- Never operate this vehicle on hills too steep for the vehicle or your abilities. Practice on small inclines.
- Always follow proper procedures for climbing or going down hills as described in *RIDING YOUR VEHICLE* subsection. Check the terrain carefully before you start up or down any hill. Never climb or descend hills with excessively slippery or loose surfaces. Never go over the top of any hill at high speed.
- Never attempt steep hills or side hilling when pulling a trailer (if equipped with hitch).
- Always check for obstacles before operating in a new area. Always follow proper procedures when operating over obstacles as described in *RIDING YOUR VEHICLE* subsection.
- Never operate this vehicle in fast flowing water or in water deeper than specified in *RIDING YOUR VEHICLE* subsection. Remember that wet brakes may have reduced stopping ability. Test your brakes after leaving water. If necessary, apply them several times to let friction dry out the brakes.
- Always ensure to properly park the vehicle on the flattest terrain section available. Put shift lever in PARK, stop engine and remove key before leaving the vehicle.
- Never assume that the vehicle will go everywhere safely. Sudden changes in terrain caused by holes, depressions, banks, softer or harder "ground" or other irregularities may cause the vehicle to topple or become unstable. To avoid this, slow down and always observe the terrain ahead. If the vehicle does begin to topple or rollover, the best advice is to immediately steer in the direction of the rollover! Never attempt to prevent a rollover with your arms or legs. You should keep your limbs inside the cage.

PRE-RIDE INSPECTION

Always inspect and confirm the safe operating condition of your vehicle prior to ride. Always follow the maintenance schedule described in this Operator's Guide.

⚠ WARNING

Perform a pre-ride inspection before each ride to detect any potential problem that could occur during operation. The pre-ride inspection can help you monitor component wear and deterioration before they become a problem. Correct any problem that you discover to reduce the risk of a breakdown or crash.

Before using this vehicle, the operator should always perform the following pre-ride inspection check list.

Refer to *MAINTENANCE PROCEDURES* for details.

Pre-Ride Inspection Check List

What to Do Before Starting the Engine (Key OFF)

ITEMS TO BE INSPECTED	INSPECTION TO PERFORM		✔
Tires	Check tire pressure and condition.		
	28 inches	– Front: MIN 152 kPa (22 PSI), LOADED 159 kPa (23 PSI) – Rear: MIN 152 kPa (22 PSI), LOADED 207 kPa (30 PSI)	
	29 inches	– Front: MIN 131 kPa (19 PSI), LOADED 138 kPa (20 PSI) – Rear: MIN 138 kPa (20 PSI), LOADED 186 kPa (27 PSI)	
	30 inches	– Front: MIN 117 kPa (17 PSI), LOADED 124 kPa (18 PSI) – Rear: MIN 165 kPa (24 PSI), LOADED 214 kPa (31 PSI)	
Wheels	Check wheels for damage and for abnormal play, and check lug nuts and beadlocks (if equipped) are tightened.		
Radiator	Check radiator for cleanliness.		
Front grille	Inspect front grille kit for cleanliness.		
Engine oil	Check engine oil level.		
Coolant	Check coolant level.		
Brake fluid	Check brake fluid level.		

ITEMS TO BE INSPECTED	INSPECTION TO PERFORM	✔
Engine air filter	Inspect engine air filter, replace if needed.	
Airbox	Inspect airbox and clean if necessary (when riding in dusty conditions or sand).	
CVT air filter	Inspect and clean the CVT air filter (when riding in dusty conditions).	
Drive shaft boots	Check drive shaft boots condition.	
Cargo and load	**Cargo Load:** If you transport a cargo, respect the maximum loading capacity of 90 kg (200 lb) **Vehicle Load:** Ensure that total load on the vehicle (including operator, passenger, cargo, tongue weight and added accessories) does not exceed 286 kg (630 lb).	
	If you are pulling a trailer or another equipment (if equipped with a hitch): – Check hitch and trailer ball condition. – Respect the tongue capacity and towing capacity. – Ensure trailer is properly secured to hitch.	
Rear cargo rack	Check if the cargo on rack is properly secured.	
Chassis and suspension	Check underneath vehicle for any debris on chassis or suspension components (upper and lower arms, wheels, shock absorber, springs) and clean them properly.	

What to Do Before Starting the Engine (Key ON)

ITEMS TO BE INSPECTED	INSPECTION TO PERFORM	✔
Gauge	Check operation of indicator lamps in gauge (With the D.E.S.S. key ON, briefly push the Start / Stop button).	
	Check for messages in gauge.	
Lights	Check operation and cleanliness of headlights and taillight.	
	Check operation of high and low beam.	
	Check operation of brake light.	

ITEMS TO BE INSPECTED	INSPECTION TO PERFORM	✔
Seats, doors and seat belts	Check seat adjustment and make sure locking device is properly engaged before riding.	
	Check doors for any damage. Have the doors replaced if any damage is found. Close both doors and confirm that they latch securely.	
	Check seat belts for any damage (including retractors, buckles and locking tabs). Fasten seat belts and ensure that they remain securely fastened and tightened against the body	
Accelerator pedal	Press on the accelerator pedal a few times to ensure it operates freely and it returns to the rest position when released.	
Brake pedal	Press down on the brake pedal and make sure you feel firm resistance and that it fully returns to position when released.	
Fuel level	Check the fuel level.	

What to Do After the Engine is Started

ITEMS TO BE INSPECTED	INSPECTION TO PERFORM	✔
Steering	Check if steering operates freely by completely turning it from side to side.	
RF D.E.S.S. post	Check if D.E.S.S. post is working properly by pulling the D.E.S.S. key from D.E.S.S. post.	
Shift lever	Check operation of shift lever (P, R, N, H and L).	
2WD/4WD selector	Check operation of 2WD/4WD selector.	
Brakes	Drive forward slowly a few feet and apply brakes. The brake pedal must feel firm when applied. The pedal must return to rest position when released. The brakes must respond adequately to the driver's input.	

PREPARE TO RIDE

Before you Ride

Perform pre-ride inspection to confirm the safe operating condition of your vehicle. Refer to *PRE-RIDE INSPECTION* subsection.

Driver and passenger must:

- Be properly seated.
- Close both doors and fasten seat belts.
- Wear appropriate riding gear. (Refer to *RIDING GEAR* subsection below.)

Riding Gear

It is important that the operator and passenger always wears appropriate protective clothing and apparel, including:

- An approved helmet
- Eye protection
- Boots
- Gloves
- A long sleeved shirt or jacket
- Long pants.

Depending on conditions, anti-fogging goggles may be required.

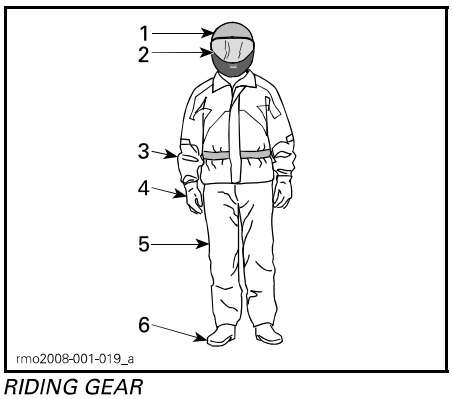

RIDING GEAR
1. *Approved helmet*
2. *Eye and face protection*
3. *Long sleeves shirt or jacket*
4. *Gloves*
5. *Long pants*
6. *Boots (over-the-ankle footwear)*

Weather conditions should help you decide how to dress. To maximize comfort and avoid frostbites in winter, dress for the coldest weather expected. Thermal underwear next to the skin also provides good insulation.

Never wear any loose clothing that may get entangled in the vehicle or on tree branches and shrubs.

Helmets and Eye Protection

Helmets protect the head and brain from injury. Even with the vehicle's cage and doors, objects can enter the cockpit and strike the head, or the head can strike the cage itself or objects outside the vehicle. Even the best helmet is no guarantee against injury, but statistics indicate that helmet use significantly reduces the risk of brain injury. So, be safe and always wear a helmet while riding.

Choosing a Helmet

Helmets should be manufactured to meet the appropriate standard in your state, province or country and should fit properly.

A helmet with face protection is a better choice as it protects also against frontal impacts. It can also protect against debris, stones, insects, the elements, etc.

An open-face helmet does not offer the same protection for the face and chin. If you wear an open-face helmet, you should use a snap-on face shield and/or a pair of goggles. Ordinary glasses or sunglasses are not sufficient eye protection for riders. They can shatter or fly off, and they allow wind and airborne objects to reach the eyes.

For winter riding conditions, a stocking type cap, balaclava and face mask should always be carried or worn.

Use tinted face shields or goggles in the daytime only; do not use them at night or in poor illumination. Do not use them if they impair your ability to discern color.

Other Riding Gear

Footwear

Always wear closed toe footwear. Sturdy over-the-ankle boots with non-slip soles offer more protection and allow you to plant your foot properly on footrest.

Avoid long shoelaces that can be tangled in the accelerator or brake pedals.

For winter riding conditions, rubber soled boots with either a nylon or leather uppers, with removable felt liners are best suited.

Avoid rubber boots. Rubber boots may get trapped behind or between pedals, impairing the proper operation of brake and accelerator pedals.

Gloves

Full-fingered gloves protect hands from the wind, sun, heat, cold and flying objects. Gloves that fit snugly will improve grip on the steering wheel and help reduce hand fatigue. Sturdy, reinforced motorcycle or ATV gloves help protect hands better in the event of an accident or a rollover. If gloves are too bulky, it may be difficult to operate the controls.

For winter riding conditions, hands should be protected by a pair of snowmobile gloves which have sufficient insulation and allow use of thumbs and fingers for operation of controls.

Jackets, Pants and Riding Suits

Wear a jacket or a long sleeved shirt and long pants, or a full riding suit. Quality ATV-type protective gear will provide comfort, and it can help you avoid being distracted by adverse environmental elements. In case of a crash, good quality protective gear made of sturdy material may prevent or reduce injury.

In cool-weather riding, protect yourself against hypothermia. Hypothermia, a condition of low body temperature, can cause loss of concentration, slowed reactions and loss of smooth, precise muscle movement. In cool conditions, proper protective gear like a windproof jacket and insulated layers of clothing are essential. Even while riding at moderate temperatures, you can feel very cold due to the wind.

Protective gear that is appropriate for cold-weather riding may be too hot when stopped. Dress in layers so that clothing can be removed as desired. Topping the protective gear with a windproof outer layer can prevent cold air from reaching the skin.

Rain Gear

If you must ride in wet weather, a rain suit or a waterproof riding suit is recommended. On long rides, it is a good idea to carry rain gear. A dry rider will be much more comfortable and alert.

Hearing Protection

Long-term exposure to wind and engine noise when riding can cause permanent hearing loss. Properly worn hearing protective devices such as earplugs can help prevent hearing loss. Check local laws before using any hearing protective devices.

AVOID ACCIDENTS

Avoid Rollovers and Tipovers

Side-by-side vehicles handle differently from other vehicles. Side-by-side vehicles are designed to handle off-road terrain (for example, their wheel base and track width, ground clearance, suspension, drivetrain, tires, etc.), and, as a result, can overturn in situations where vehicles designed for use primarily on paved or smooth terrain may not.

A rollover or other accident can occur quickly during abrupt maneuvers such as sharp turns or hard acceleration or deceleration when turning, or when driving on hills or over obstacles. Abrupt maneuvers or aggressive driving can cause rollovers or loss of control even in flat open areas. If the vehicle rolls over, any part of your body (such as arms, legs, or head) outside of the cockpit can be crushed and trapped by the cage or other parts of the vehicle. You can also be injured by impact with the ground, cockpit or other objects.

To reduce the risk of rollovers:

– Use care when turning.
  - Do not turn the steering wheel too far or too fast for your speed and environment. Adjust steering inputs according to your speed and environment.
  - Slow down before entering a turn. Avoid hard braking during a turn.
  - Avoid sudden or hard acceleration when turning, even from a stop or low speed.
– Never attempt donuts, skids, slides, fishtails, jumps, or other stunts. If vehicle starts to skid or slide, steer in the direction of the skid or slide. Never slam the brakes and lock the wheels.
– Avoid paved surfaces. This vehicle is not designed to operate on paved surfaces and is more likely to roll over. If you must drive on pavement, turn gradually, go slowly, and avoid abrupt acceleration and braking.

This vehicle can roll over sideways or tip over forward or backwards on slopes or uneven terrain.

– Avoid side hilling (driving along the slope rather than up or down a hill). When possible, drive straight up and down inclines rather than across them. If you must side hill, use extreme caution and avoid slippery surfaces, objects, or depressions. If you feel the vehicle start to rollover or slide sideways, steer downhill if possible.
– Avoid steep hills and follow procedures in this guide for climbing and descending hills.
– Sudden changes in terrain such as holes, depressions, banks, softer or harder ground or other irregularities may cause the vehicle to tip or become unstable. Observe the terrain ahead and slow down in areas of uneven terrain.

This vehicle will handle differently when carrying or pulling a load.

– Reduce speed and follow instructions in this manual for carrying cargo or pulling a trailer.
– Avoid hills and rough terrain.
– Allow more distance to stop.

Be Prepared in Case of Rollover

– Close both doors and fasten seat belt to help you avoid sticking out arms or legs.

- Never grab the cage while riding. Hands can be crushed between the cage and the ground in a rollover. Keep hands on the steering wheel or handholds.
- Never try to stop a rollover using your arms or legs. If you think that the vehicle may tip or roll, the driver should keep both hands on the steering wheel and the left foot firmly planted on the footrest. The passenger should keep both hands on the handholds and both feet firmly planted on the floor.

Avoid Collisions

This vehicle can reach high speeds. At higher speeds, there is an increased risk of losing control, particularly in challenging off-road conditions, and the risk of injury in a collision is greater. Never operate at excessive speeds. Always go at a speed that is proper for the terrain, visibility, and operating conditions, and your experience. Consider reserving use of the performance key for situations in which full speed and acceleration capability are appropriate.

Never operate this vehicle on any public street, road or highway, even dirt or gravel ones. Riding your vehicle on roads or highways could result in a collision with another vehicle. This vehicle is not designed for operation on roads. For example, it does not meet motor vehicle safety standards that apply to automobiles. In many jurisdictions it is not legal to operate this vehicle on public roads.

This vehicle does not have the same kind of protection for collisions as a car; for example, there are no air bags, the cockpit is not fully enclosed, and it is not designed for collisions with other vehicles. Therefore, it is particularly important to fasten seat belts and close doors and wear an approved helmet.

Practice Exercises

Before you go out for a ride, it is very important to familiarize yourself with the handling of your vehicle by practicing in a controlled environment. If possible, it is also a very good idea to take a more formal training course to sharpen your skills and increase your knowledge of the vehicle.

Find a suitable area to practice and perform the following exercises. It should be at least 45 m (150 ft) by 45 m (150 ft) free of obstacles like trees and rocks. Once you've selected a suitable permitted location, proceed with the following practice exercises.

Turning Exercises

Turning is one of the most frequent causes of accidents. It is easier for the vehicle to lose traction or rollover if you turn too sharply, or go too fast. Slow down when you approach a turn.

- First learn how to perform slight right turns at very low speeds. Release the throttle before turning and slowly reapply the throttle when turning.
- Repeat turning exercise but this time maintain the throttle at the level while turning.
- Finally, repeat turning exercise while accelerating slowly.
- Practice exercises turning on the other side.

Note how your vehicle reacts in these different exercises. We recommend releasing the throttle before entering a turn to help initiate directional change. You will feel the lateral force increasing with the speed and with your steering input. The lateral force should be maintained as low as possible to make sure it does not cause the vehicle to roll over.

U Turn Exercises

Practice doing U turns.

- Accelerate slowly and while remaining at low speed, then gradually turn the steering wheel to the right until you have completed the U turn.
- Repeat U turn exercise with different steering inputs and always at a very low speed.
- Repeat U turn exercise on the other side.

As mentioned before in this guide, do not ride on paved surfaces as the vehicle behavior will not be the same, increasing the risk of rollover.

Braking Exercises

Practice braking to get familiar with the brake response.

- Do it at low speed first, then increase the speed.
- Practice braking in straight line at different speeds and different braking force.
- Practice emergency braking; optimal braking is obtained in straight line, with high force applied, without locking the wheels.

Remember, braking distance depends on vehicle speed, load and the type of surface. Also, the tires and brakes conditions play a major role.

Reverse Exercises

The next step involves using the reverse.

- Install 1 cone marker on both sides of the vehicle beside each rear wheel. Move the vehicle forward until you can see the cone markers, then stop the vehicle. Acknowledge the distance required to see obstacles behind you.
- Learn how the vehicle handles itself in reverse and reacts with steering inputs.

– Always perform this reverse exercise at slow speeds.
– Become familiar with the usage of the override function. Do not steer while using the override as it increases the risks of rollover.

Emergency Engine Stopping Exercise

Learn how to stop your engine quickly in an emergency situation.

– While running at low speed, simply remove the RF D.E.S.S. key from the D.E.S.S. post.

This is to familiarize you with the vehicle's reaction when the engine is turned off while driving and to develop this reflex.

Off-Road Operation

The very nature of off-road operation is dangerous. Any terrain, which has not been specially prepared to carry vehicles, presents an inherent danger where terrain substance, shape and steepness are unpredictable. The terrain itself presents a continual element of danger, which must be knowingly accepted by anyone venturing over it.

An operator who takes a vehicle off-road should always exercise the utmost care in selecting the safest path and keeping close watch on the terrain ahead of him. The vehicle should never be operated by anyone who is not completely familiar with the driving instructions applicable to the vehicle, nor should it be operated on steep or treacherous terrain.

General Riding Techniques

General Driving Tips

Care, caution, experience and driving skill are the best precautions against the hazards of vehicle operation.

Whenever there is the slightest doubt that the vehicle can safely negotiate an obstacle or a particular piece of terrain, always choose an alternate route.

In off-road operation, power and traction, not speed, are important. Never drive faster than visibility and your own ability to select a safe route permit. Always go slowly and be extra careful when operating on unfamiliar terrain. Always be alert to changing terrain conditions when operating this vehicle. Be especially cautious on excessively rough, slippery, icy or loose terrain.

Constantly watch the terrain ahead for sudden changes in slopes or obstacles, such as rocks or stumps, that may cause loss of stability, resulting in tip over or rollover.

Never operate the vehicle if the controls do not function normally. See an authorized Can-Am dealer.

To maintain proper control it is strongly advised that you keep your hands on the steering wheel and within easy reach of all controls. The same holds true for your feet. To minimize the possibility of any leg or foot injury, keep your left foot on the footrest and right foot on the floor at all times. Staying completely within the cockpit will also help keep you from striking objects outside the vehicle.

Watch for and avoid branches and other objects that could enter the cockpit and strike you or your passenger.

Operating in Reverse

When operating in reverse, check that the path behind the vehicle is free of people or obstacles. Pay attention to blind spots. When it is safe to proceed in reverse, go slowly and avoid sharp turns.

⚠ WARNING

Steering inputs in reverse operation increase the risk of rollover.

NOTE: In reverse operation, the engine RPM is limited thus limiting the vehicle reverse speed.

⚠ WARNING

When driving downhill in reverse, gravity can increase the vehicle speed above the set limited reverse speed.

Crossing Roads

If you have to cross a road, ensure to have complete visibility on both sides for incoming traffic and decide on exit point on other side of road. Drive in a straight line toward that point. Do not make sharp direction changes or abrupt accelerations as it may result in a rollover situation. Do not travel on sidewalks or bicycle trails as they are designated specifically for those uses.

Riding on Paved Surfaces

Avoid paved surfaces. This vehicle is not designed to operate on paved surfaces and is more likely to roll over. If you must drive on pavement, turn gradually, go slowly, and avoid abrupt acceleration and braking.

Shallow Water Crossing

Water can be a unique hazard. If it is too deep the vehicle may "float" and topple. Check the water depth and current before you attempt to cross any water. Water depth should not exceed 30 cm (12 in) for vehicle to safely cross the obstacle. Beware of slippery surfaces such as rocks, grass, logs, etc., both in the water and on its banks. A loss of traction may occur. Do not attempt to enter the water at high speed.

Water will affect the braking ability of your vehicle. Make sure you dry the brakes by applying them several times after the vehicle leaves the water.

Mud or marsh lands may be encountered near water. Be prepared for sudden "holes" or changes in depth. Similarly so, be watchful of hazards such as rocks, logs, etc., partially covered by vegetation.

Riding on Snow or Ice

When performing pre-ride inspection, pay special attention to locations on the vehicle where snow and/or ice accumulations may obstruct visibility of the tail lamp, clog ventilation openings, block the radiator and fan, and interfere with the movement of controls. Before starting with your vehicle, check the steering, accelerator and brake pedals for interference free operation.

Whenever this vehicle is ridden on a snow covered drive path, the tire grip is generally reduced causing the vehicle to react differently to control inputs from the operator. On low grip surfaces, the steering responses are not as crisp and precise, stopping distances are lengthened and acceleration is also affected. Slow down and do not "gun" the accelerator. This will only result in spinning of the tires and possibly in an over steering slide of the vehicle. Avoid hard braking. This will possibly result in a straight line slide of the vehicle. Again, the best advice is to safely reduce speed in anticipation of a maneuver to give yourself time and distance in order to keep control of the vehicle.

As you drive your vehicle over a loose snow covered surface, snow dust will be picked up in the wake turbulence of the moving vehicle and transported to contact and accumulate or melt on some exposed components including rotating parts like brake discs. Water, snow or ice may affect the response time of the brake system of your vehicle. Even when not required to reduce vehicle speed apply brakes frequently to prevent ice or snow accumulation and to dry brake pads and discs. While doing so in low risk driving situations you will test for grip level and keep yourself alerted to how the vehicle reacts to your control inputs. Always

keep brake and accelerator pedals and floor boards free of snow and ice. Frequently wipe snow off seat, steering wheel, headlights and tail lamps.

The depth of the snow cover may hide rocks, tree stumps or other objects and if it is wet may totally impede the drivability as the vehicle becomes bogged down or completely looses traction in slushy snow. Look far ahead and always be watchful of any visible clues that might indicate the presence of such obstacles. In doubt steer clear. Avoid driving on any frozen waterways before checking that the ice will safely support the vehicle, its riders and its load of cargo.

At the end of each ride it is a good practice to clean the vehicle and all moving components (brakes, steering components, drivelines, controls, radiator fan etc.) from any snow or ice accumulations. Wet snow will turn to ice during the shut down period and become more difficult to remove at the next pre-ride inspection.

Riding on Sand

Sand and riding on sand dunes is another unique experience but there are some basic precautions that should be observed. Wet, deep or fine sand may create a loss of traction and cause the vehicle to slide, drop off or become "bogged" down. If this occurs look for a firmer base. Again, the best advice is to slow down and be watchful of the conditions.

When riding in sand dunes it is advisable to equip the vehicle with an antenna type safety flag. This will help make your location more visible to others over the next sand dune. Proceed carefully should you see another safety flag ahead.

Riding on Gravel, Loose Stones or Other Slippery Surfaces

Riding on loose stones or gravel is very similar to riding on ice. They will affect the steering of vehicle, possibly causing it to slide and tip over especially at high speeds. In addition, braking distance may be affected. Remember that "gunning" the throttle or sliding may cause loose stones to be ejected rearwards into the path of another rider's way. Never do it deliberately.

If you do get into a slide or skid, it may help to turn the steering wheel into the direction of the skid until you regain control. Never jam the brakes and lock the wheels.

Crossing Obstacles

Use the low range (L) for crossing obstacles.

Obstacles on the "trail" should be traversed with caution. This includes rocks, fallen trees, and depressions. You should avoid them whenever possible. Remember that some obstacles are too large or dangerous to cross and should be avoided. As a guideline, never attempt to cross an obstacle higher than the ground clearance of the vehicle. Small rocks or small fallen trees may be safely crossed - approach obstacle at low speed and as much as possible at a right angle. Adjust speed without losing momentum and do not accelerate abruptly. Passenger must grasp both handholds firmly and brace feet on the floor. Hold steering firmly without closing your fists around it and proceed. Be aware that the obstacle may be slippery or may move while crossing.

Hill Driving Conditions

When driving on hills or slopes, two things are highly important: be prepared for slippery surfaces or terrain variations and obstacles and brace yourself properly inside vehicle. If you climb or descend a hill that is too slip-

pery or has too loose a surface, you can lose control. If you go over the top of a hill at high speed, you may not have time to prepare for the terrain on the other side. Avoid parking on a slope. Always put the shift lever in PARK when stopped or parked, especially on an incline, to avoid rolling. If you must park on a steep incline, block the wheels using rocks or bricks.

Uphill Driving

Use the low range (L) for uphill driving.

Due to its configuration, this vehicle has very good traction even while climbing, so much so that tip over is possible before traction is lost. For example, it is common to encounter terrain situations where the top of the hill has eroded to a point that the hill peak rises very sharply. This vehicle is not designed to negotiate such a condition. Take an alternate route.

It is also wise to know the terrain condition on the other side of the hill or bank. All too often there exists a sharp drop-off that is impossible to negotiate or descend.

If you feel that the slope is getting too steep to climb, apply brakes to immobilize vehicle. Put shift lever in reverse (R), and back down the hill, barely releasing brakes to remain at low speed. Do not attempt to turn around. Never coast down hill while vehicle is in neutral. Do not perform hard braking as it increases the risk of tipover.

Downhill Driving

This vehicle can climb steeper slopes than it can descend safely. Therefore, it is essential to assure that a safe route exists to descend a slope before you climb it.

Decelerating while negotiating a slippery downhill slope could "toboggan" the vehicle, causing it to slide. Maintain steady speed and/or accelerate slightly to regain control. Never slam brakes and lock the wheels.

Side Hilling

Whenever possible, sidehilling (driving across a slope rather than up or down it) should be avoided. If necessary, do so with extreme caution. Side hilling on steep inclines could result in rollover. In addition, slippery or unfirm surfaces could result in uncontrollable side sliding. Avoid all objects or depressions that will intensify the raising of one side of the vehicle higher than the other, thus causing rollover. If you feel the vehicle start to rollover or slide sideways, steer downhill if possible.

⚠ WARNING

Be careful when loading and transporting liquid reservoirs. They can affect vehicle stability when side hilling by pulling downhill and increasing the risk of a roll over.

Drop-Offs

This vehicle is not designed to negotiate drop-offs. It will "bottom-out" and usually stop if either the front or rear wheels are driven over a drop-off. If the drop is sharp or deep, the vehicle will nose dive and tip over.

Avoid negotiating drop-offs. Reverse and select an alternate route.

Recreational, Group and Distance Riding

Respect the rights and limitations of others. Stay away from areas designated for other types of off road use. This includes snowmobile trails, equestrian trails, cross country ski trails, mountain bike trails, etc. Never assume there are no other users on the trail. Always stay to the right of the trail and do not zig zag to one side of the trail then the other. Be prepared to stop or pull off to the side if another trail user appears in front of you.

Join a local side-by-side vehicle club. It will provide you with a map and advice or inform you where you can ride. If a

club does not exist in your area, help to start one. Group riding and club activities provide a pleasurable, social experience. Never use with drugs or alcohol, or tired or ill.

Always keep a safe distance from other riders. Your judgment of speed, terrain conditions, weather, mechanical condition of your vehicle and the "trust in judgment" you have in others around you will help you make a better choice of appropriate safe distance. This vehicle, like any other motorized vehicle, cannot stop "on a dime".

Before you ride, tell someone where you are planning to travel and your expected time of return.

Depending on the length of your ride, carry additional tools or emergency equipment. Find out where you can get additional gasoline. Be prepared for the possible conditions you may encounter. An emergency first aid kit should always be a consideration.

Environment

One of the benefits of this vehicle is that it can take you off the beaten path away from most communities. However, you should always respect nature and the rights of others to enjoy it. Do not ride in environmentally sensitive areas. Do not drive over forest crops or shrubs, nor cut down trees or take down fencing, nor spin your wheels and destroy the terrain. "Tread Lightly".

This vehicle can cause OHV wildfires if debris builds up near the exhaust or other engine hot spots and ignites then falls off into dry grass. Avoid riding in wet areas, through muskeg or tall grass, where debris can build up. Should you ride in those areas, inspect and remove all debris from your engine and hot spots. Refer to *MAINTENANCE* section for details.

Chasing wildlife is in many areas illegal. Wildlife can die of exhaustion after being chased by a motorized vehicle. If you encounter animals on the trail, stop and observe quietly and with caution. It will be one of the better memories of your life.

Observe the rule... "what you take in, carry out". Do not litter. Do not start campfires unless you have permission to do so, and then only away from dry areas. The hazards you may create on the trail may cause injury to others or yourself, even at a later date.

Respect farm lands. Always obtain the permission of the landowner before riding on private land. Respect crops, farm animals and property lines.

Finally, do not pollute streams, lakes or rivers and do not modify the engine or exhaust system, or remove any of its components as it will alter the vehicle emissions.

MOVING LOADS AND DOING WORK

Working with your Vehicle

Your vehicle can help you perform a number of different LIGHT tasks ranging from snow removal to carrying cargo. A variety of accessories are available from your authorized Can-Am dealer. To prevent possible injury, follow the instructions and warnings that accompany the accessory. Always respect the load limits of the vehicle. Overloading the vehicle can overstress the components and cause failure. Avoid overexerting yourself if you lift or pull heavy loads or manually push the vehicle.

Carrying Loads

Any load carried on the vehicle will affect the handling, stability and braking distance of the vehicle. Do not exceed the load limits of the vehicle, including the weight of operator, passenger, cargo, accessories and trailer tongue weight. Always be aware that the "load" may slide or fall off and create an accident.

LOAD LIMIT OF THE VEHICLE	
286 kg (630 lb)	Includes occupants, cargo, added accessories, and tongue weight (if applicable)

Following are examples of suitable total vehicle load distribution:

EXAMPLES OF SUITABLE VEHICLE TOTAL LOADS (LOW RANGE)				
OPERATOR AND PASSENGER	CARGO LOAD	ACCESSORIES	TONGUE WEIGHT	TOTAL VEHICLE LOAD
171 kg (377 lb)	31 kg (68 lb)	25 kg (55 lb)	59 kg (130 lb)	286 kg (630 lb)

NOTE: When the vehicle's transmission is in high range, the combined weight on cargo rack and tongue weight must not exceed 90 kg (200 lb).

To reduce the risk to lose control or the load carried, follow these recommendations.

Vehicle Settings When Carrying Load

When the total load exceeds 195 kg (430 lb), including weight of operator, passenger, cargo, accessories and, if applicable, trailer tongue weight, inflate the tires to maximum pressure.

MAXIMUM PRESSURE		
SIZE	FRONT	REAR
28 inches	159 kPa (23 PSI)	207 kPa (30 PSI)
29 inches	138 kPa (20 PSI)	186 kPa (27 PSI)
30 inches	124 kPa (18 PSI)	214 kPa (31 PSI)

NOTE: When carrying a passenger or heavy loads readjust suspension accordingly.

NOTE: When carrying heavy loads in cargo rack or pulling a loaded trailer operate with the shift lever in L (low range).

Loading the Cargo Rack

NOTICE When loading or unloading, do not exceed the weight limit of 90 kg (200 lb).

Load cargo as low as possible – a higher load can raise the vehicle's center of gravity, which can reduce stability. Position cargo on the rack as evenly as possible.

Secure the load on the cargo rack. Do not secure cargo to the cage or other part of the vehicle. If it is not properly secured, a load may slide or fall off, possibly striking occupants or bystanders; or it may shift during riding, affecting the handling of the vehicle.

Objects that are high may affect visibility for the driver and may act as projectiles in case of an accident. Loads that protrude sideways can get snagged or caught in bush, branches or other obstacles. Avoid covering and obstructing the brake lights with the cargo. Ensure no cargo protrudes outside the cargo rack and that cargo will not interfere with your visibility or control of the vehicle.

Do not overload cargo rack.

⚠ WARNING

Never carry gasoline container(s) or any dangerous liquids on the cargo rack unless it is designed and approved for this vehicle.

⚠ WARNING

Never overload, tow or carry cargo improperly. Safely reduce speed according to terrain conditions when carrying cargo or pulling a trailer, and avoid hills and rough terrain. Allow greater distance for braking. Always secure cargo as low as possible to reduce the effect of a higher center of gravity. Failure to follow the recommendations here could cause changes in vehicle handling which could lead to an accident.

Hauling a Load (if Equipped with Hitch)

Never pull a load by attaching it to the cage; this can cause the vehicle to tip over. Use only the trailer hitch (if installed) to pull a load.

In an emergency situation, use the recovery hook to recover a stuck vehicle.

When pulling loads with a chain or cable, ensure that there is no slack before starting and maintain tension while pulling.

When pulling loads with a chain or cable, be sure to brake progressively. The inertia of the load could lead to an impact.

When hauling a load, respect the maximum hauling capacity. See *PULLING A TRAILER* subsection.

⚠ WARNING

Slack can cause the chain or cable to break and snap back.

When pulling another vehicle, be sure that someone is controlling the pulled vehicle. They must brake and steer to prevent the vehicle from going out of control.

Reduce your speed when hauling a load and turn gradually. Avoid hills and rough terrain. Never attempt steep hills. Allow more distance for brak-

ing, especially on inclined surfaces and when a passenger is on board. Be careful not to skid or slide.

Pulling a Trailer (if Equipped with Hitch)

NOTICE A BRP approved rear hitch must be properly installed on the vehicle for hauling trailers.

Riding this vehicle with a trailer substantially increases the risk of toppling, especially on inclined slopes. If a trailer is used behind the vehicle make sure that its hitch is compatible with the one on the vehicle. Make sure the trailer is horizontal with the vehicle. (In some instances a special extension may have to be installed on the vehicle hitch). Use security chains or cables to secure the trailer with the vehicle.

Reduce your speed when pulling a trailer and turn gradually. Avoid hills and rough terrain. Never attempt steep hills. Allow more distance for braking, especially on inclined surfaces and when a passenger is on board. Be careful not to skid or slide.

Improperly loading a trailer may cause loss of control. Respect the recommended maximum hauling capacity and maximum tongue load (Refer to *MAXIMUM HAULING CAPACITY* table). Make sure there is at least some weight on the tongue.

Always make sure load is evenly distributed and safely secured on the trailer; an evenly balanced trailer is easier to control.

Always put the shift lever to L (low range) for hauling a trailer – in addition to providing more torque, operating in low range helps account for the increased load on the rear tires.

When stopped or parked, block the vehicle and trailer wheels from possible movement.

Use caution when disconnecting a loaded trailer; it or its load may topple on you or others.

When hauling a trailer, respect the maximum hauling capacity indicated on the label on the hitch.

IMPORTANT ON-PRODUCT LABELS

Hang Tag

This vehicle comes with a hang tag and labels containing important safety information.

Any person who rides this vehicle should read and understand this information before riding.

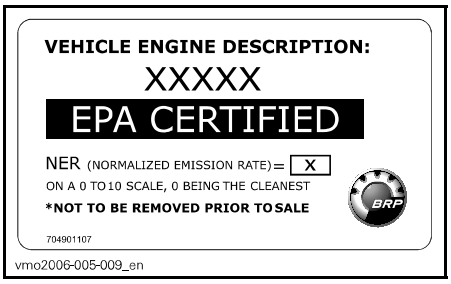

TYPICAL: APPLICABLE FOR ALL MODELS IN CANADA AND UNITED STATES, APPLICABLE FOR MODELS EVERYWHERE EXCEPT CANADA AND UNITED STATES WHEN EQUIVALENT TO A MODEL CERTIFIED TO US. EPA STANDARDS



Safety Labels

Read and understand all the safety labels on your vehicle.

These labels are affixed to the vehicle for the safety of the operator, passenger or bystanders.

The following labels are on your vehicle, and they should be considered permanent parts of the vehicle. If missing or damaged, they can be replaced free of charge. See an authorized Can-Am dealer.

NOTE: In the event of any discrepancy between this guide and the vehicle, the safety labels on the vehicle have precedence over the labels in this guide.

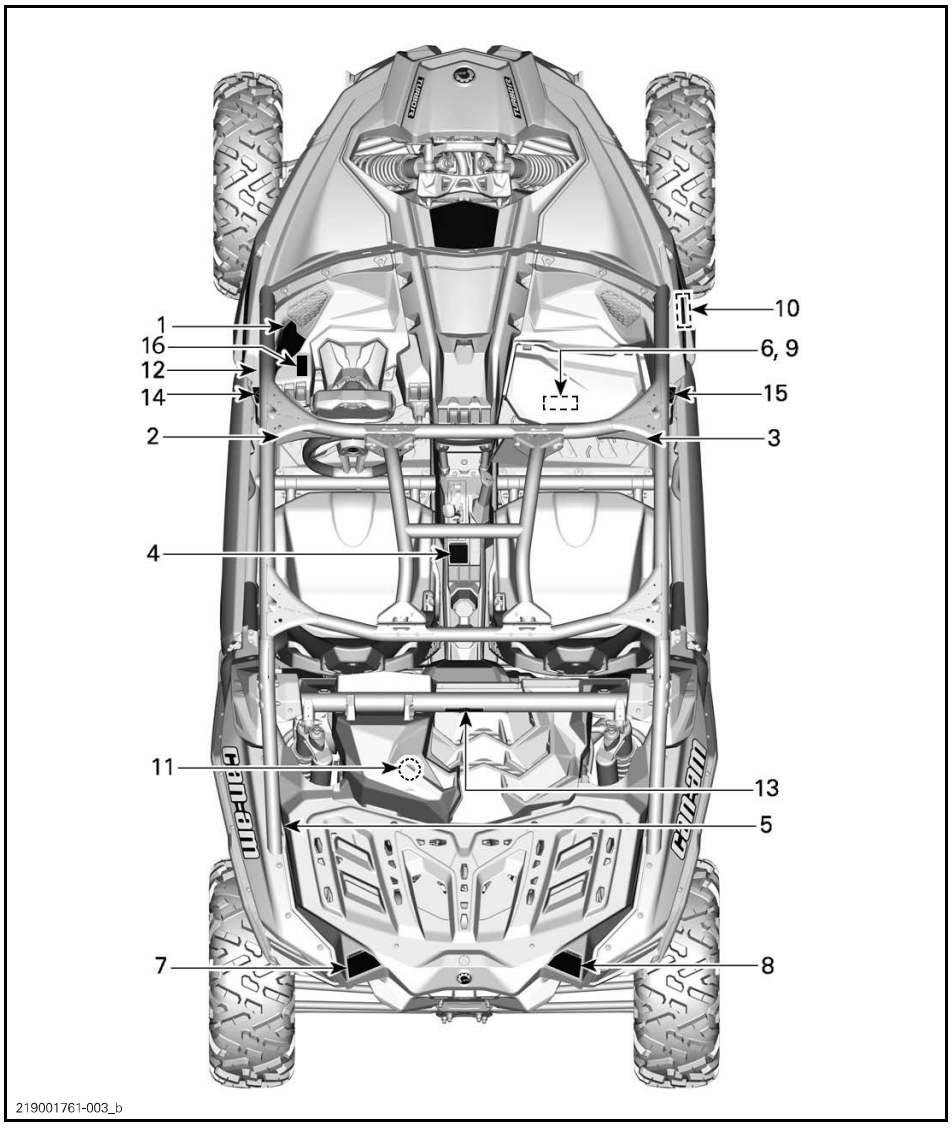
1
16
12
14
2
4
11
7
10
6, 9
15
3
13
5
8
219001761-003_b

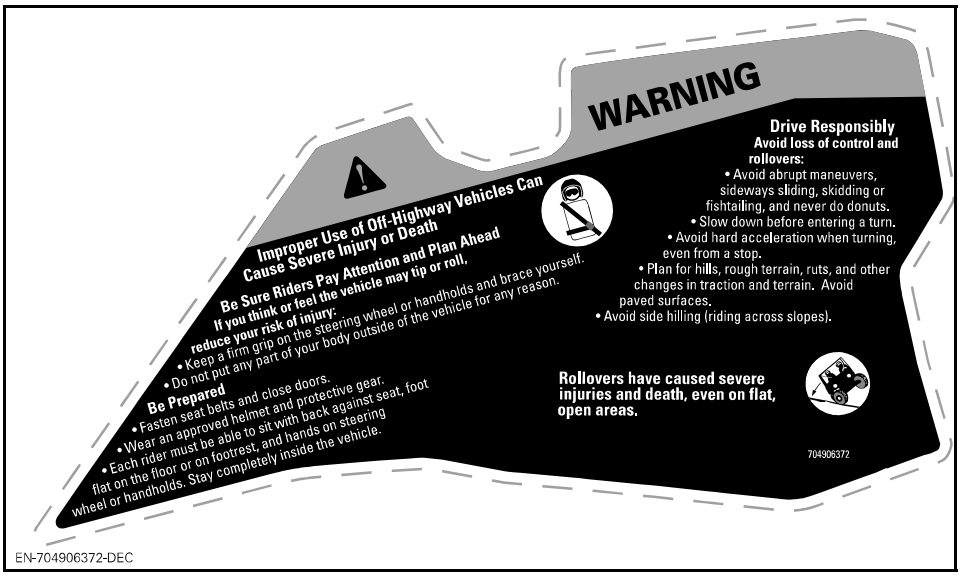
WARNING
Improper Use of Off-Highway Vehicles Can Cause Severe Injury or Death
Be Sure Riders Pay Attention and Plan Ahead
If you think or feel the vehicle may tip or roll, reduce your risk of injury:
• Keep a firm grip on the steering wheel or handholds and brace yourself.
• Do not put any part of your body outside of the vehicle for any reason.
Be Prepared
• Fasten seat belts and close doors.
• Wear an approved helmet and protective gear.
• Each rider must be able to sit with back against seat, foot flat on the floor or on footrest, and hands on steering wheel or handholds. Stay completely inside the vehicle.
Drive Responsibly
Avoid loss of control and rollovers:
• Avoid abrupt maneuvers, sideways sliding, skidding or fishtailing, and never do donuts.
• Slow down before entering a turn.
• Avoid hard acceleration when turning, even from a stop.
• Plan for hills, rough terrain, ruts, and other changes in traction and terrain. Avoid paved surfaces.
• Avoid side hilling (riding across slopes).
Rollovers have caused severe injuries and death, even on flat, open areas.
704906372
EN-704906372-DEC

LABEL 1


WARNING
Improper Use of Off-Highway Vehicles Can Cause Severe Injury or Death
Be prepared in case of rollover
NEVER • Hold the cage while riding.
• Try to stop a rollover using your arm or leg.
ALWAYS • Fasten seat belts and close doors.
Require Proper Use of Your Vehicle
Do your part to prevent injuries:
• Do not allow careless or reckless driving.
•Make sure operators are 16 or older with a valid driver's license.
• Do not let people drive or ride after using alcohol or drugs.
• Do not allow operation on public roads (unless designated for off-highway vehicle access) – collisions with cars and trucks can occur.
• Do not exceed seating capacity: 2 occupants.
DRIVER UNDER 16
Read the Operator's Guide and Safety Labels and Watch the Safety Video.
Follow All Instructions and Warnings.
7049061488
EN-704906148-DEC

LABEL 2


WARNING
PASSENGER
Improper Use of Off-Highway Vehicles
Can Cause Severe Injury or Death
Be prepared in case of rollover
NEVER • Hold the cage while riding.
• Try to stop a rollover using your arm or leg.
ALWAYS • Fasten seat belts and close doors.
7049061498
Be Prepared
• Fasten seat belts and close doors.
• Wear an approved helmet and protective gear.
• Each rider must be able to sit with back agains seat,foot flat on the floor or on footrest, and hands on handholds. Stay completely inside the vehicle.
Be sure riders pay attention and plan ahead
If you think or feel the vehicle may tip or roll, reduce your risk of injury:
• Keep a firm grip on handholds and brace yourself.
• Do not put any part of your body outside of the vehicle for any reason.
Passenger qualifications and responsibilities
• Do not ride after using drugs or alcohol.
• Ask the operator to slow down or stop if you feel uncomfortable when riding.
EN-704906149-DEC

LABEL 3



LABEL 4

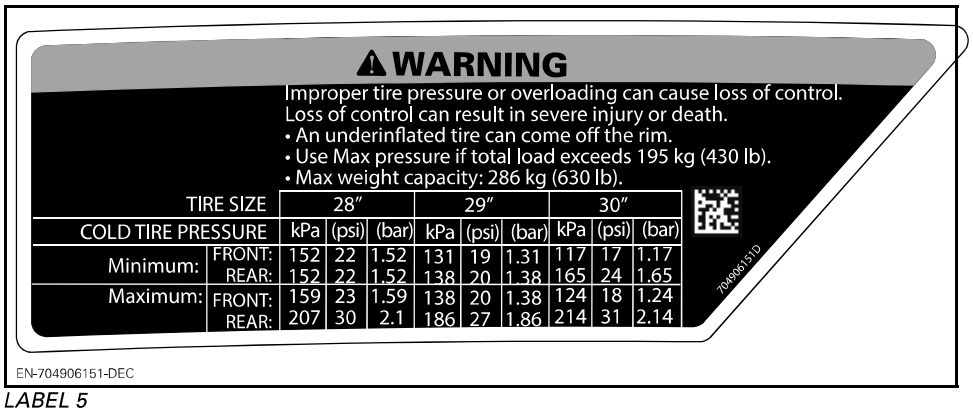

LABEL 5

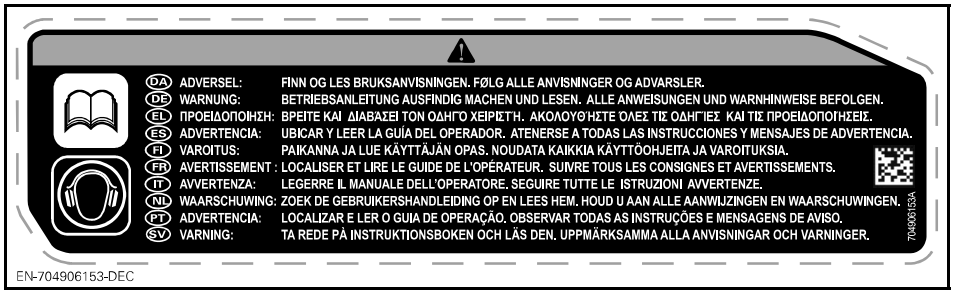

LABEL 6



LABEL 7

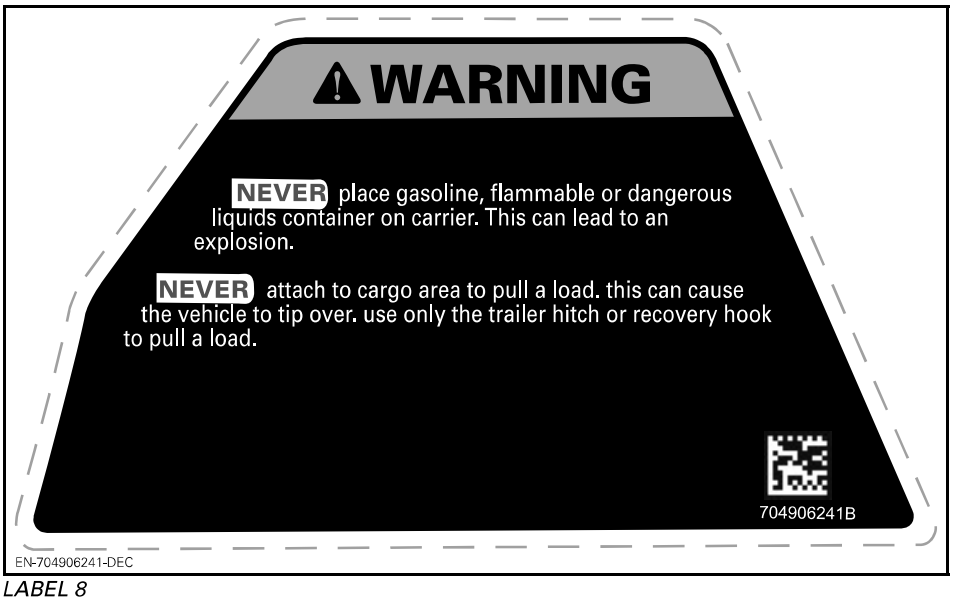

LABEL 8



LABEL 9

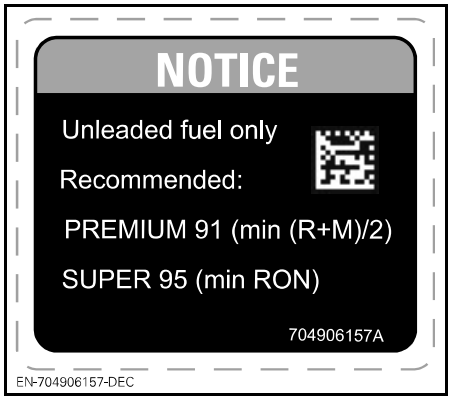

LABEL 10

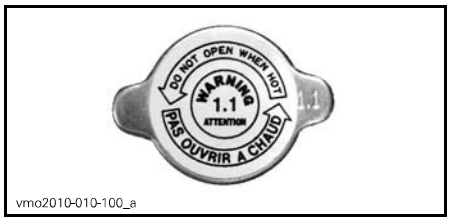

LABEL 11

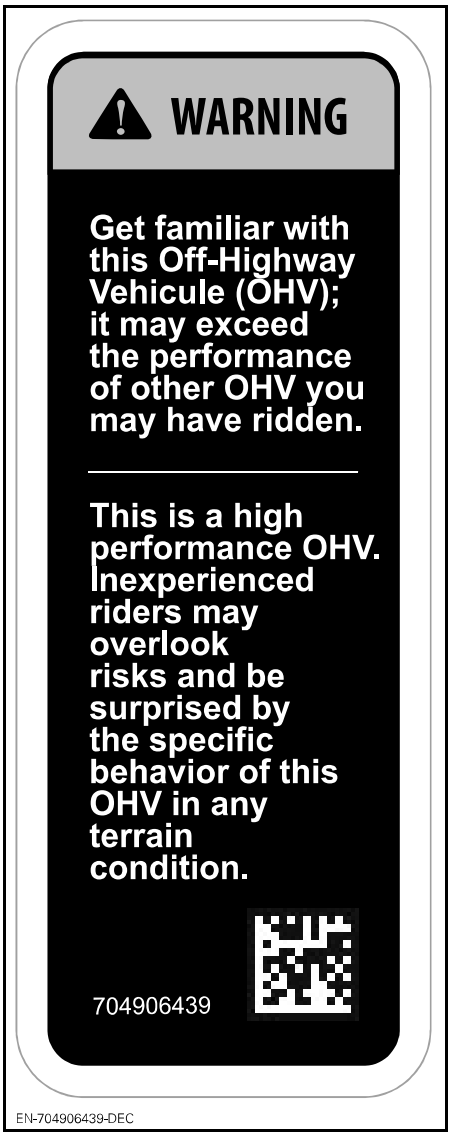

LABEL 12



LABEL 13



LABEL 14



LABEL 15



LABEL 16

Compliance Labels

These labels indicate vehicle's compliance.

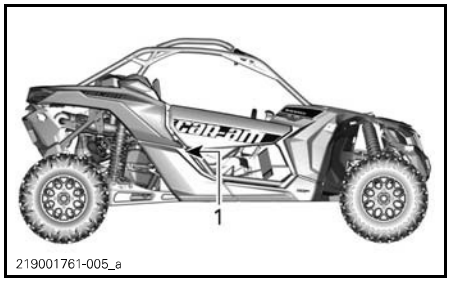

TYPICAL

1. *Compliance labels located behind passenger seat*

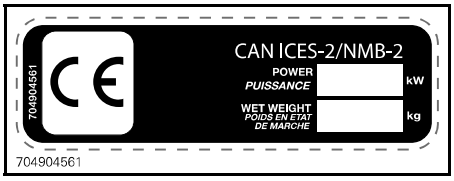



TYPICAL: APPLICABLE FOR ALL MODELS IN CANADA AND UNITED STATES, APPLICABLE FOR MODELS EVERYWHERE EXCEPT CANADA AND UNITED STATES WHEN EQUIVALENT TO A MODEL CERTIFIED TO US. EPA STANDARDS

Technical Information Labels

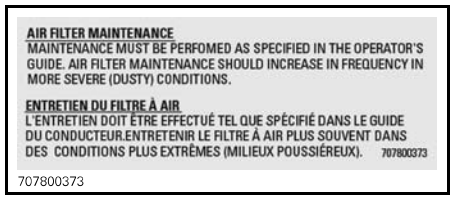

LOCATION: ON ENGINE AIR FILTER HOUSING COVER

This page is intentionally blank

VEHICLE INFORMATION

PRIMARY CONTROLS

It is important to know the location and operation of all controls, and to develop and practice smooth and coordinated use of them.

NOTE: Some vehicle safety labels are not shown on illustrations. For information on vehicle safety labels, refer to *VEHICLE SAFETY LABELS* subsection.

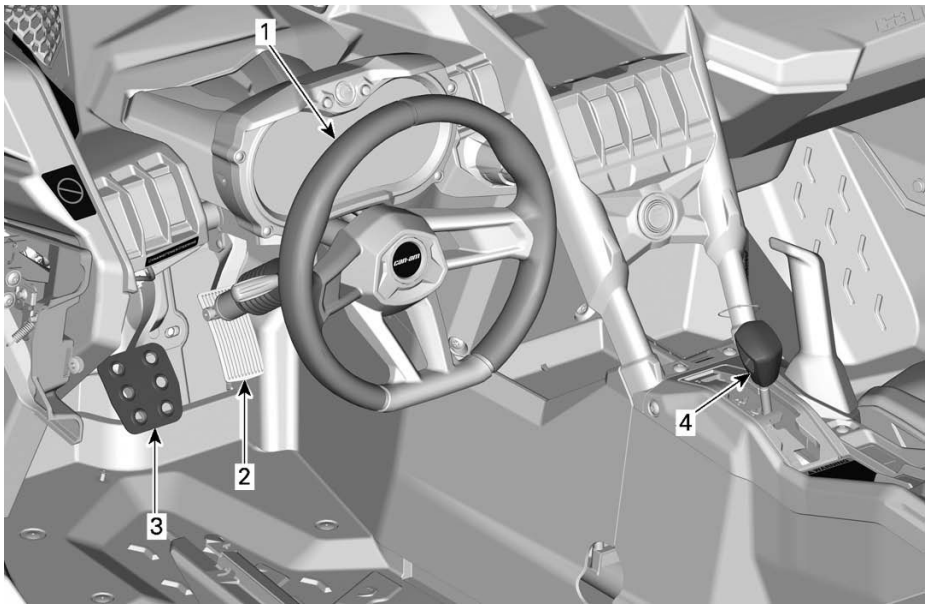

TYPICAL - PARTS REMOVED FOR CLARITY

1) Steering Wheel

The steering wheel is located in front of the driver's seat.

The steering wheel steers the vehicle to the left or right.

Steer the steering wheel in the direction you want to go.



1. Steering wheel

Grip the steering wheel with both hands, without having thumbs rolled around the steering wheel.

⚠ CAUTION Under rough trail conditions or when crossing an obstacle, the steering wheel could suddenly jerk on one side, causing hand or wrist injuries if the thumbs are rolled around the steering wheel.

The DPS reduces the effort to turn the steering wheel.

2) Accelerator Pedal

The accelerator pedal is located on the right side of the brake pedal.

The accelerator pedal controls the engine speed.

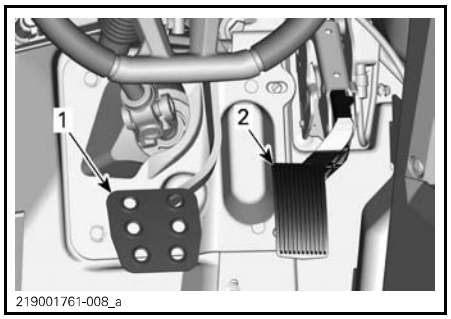

1. Brake pedal
2. Accelerator pedal

To increase or maintain vehicle speed, press on the accelerator pedal with your right foot.

To decrease vehicle speed, release the accelerator pedal.

The accelerator pedal is spring loaded and should return to rest position (idle) when not pressed.

NOTE: The accelerator pedal should never be disassembled.

3) Brake Pedal

The brake pedal is located on the left side of the accelerator pedal.

The brake pedal function is to slow down or stop the vehicle.

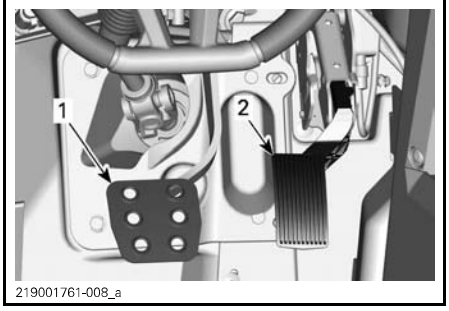

1. Brake pedal
2. Accelerator pedal

To decrease vehicle speed or to stop vehicle, press down the brake pedal with your right foot.

The brake pedal is spring loaded and should return to rest position when not pressed.

4) Shift Lever

The shift lever is located on the lower console.

The shift lever is used to change the gearbox position.

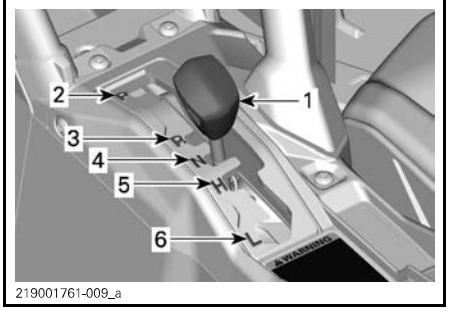

1. Shift lever
2. Park
3. Reverse
4. Neutral
5. High range (forward)
6. Low range (forward)

The vehicle must be stopped and brakes applied prior to selecting any gear.

NOTICE This gearbox is not designed to shift while vehicle is moving.

Park

The park position locks the gearbox to help prevent vehicle movement.

⚠ WARNING

Always use the PARK (P) position when the vehicle is not in operation. The vehicle can roll if the shift lever is not set to P (PARK).

Reverse

The reverse position allows the vehicle to go backwards.

NOTE: In reverse operation, the engine's RPM is limited, thus limiting the vehicle reverse speed.

⚠ WARNING

When driving downhill in reverse, gravity can increase the vehicle speed above the set limited reverse speed.

Neutral

The neutral position disengages the gearbox.

High Range (Forward)

This position selects the high speed range of the gearbox. It is the normal driving speed range. It allows the vehicle to reach its maximum speed.

Low Range (Forward)

This position selects the low speed range of the gearbox. It allows the vehicle to move slowly with maximum torque at the wheels.

NOTICE Use the low speed range to pull a trailer (if equipped with hitch), carry heavy cargo, go over obstacles or drive uphill and downhill.

SECONDARY CONTROLS

NOTE: Some vehicle safety labels are not shown on illustrations. For information on vehicle safety labels, refer to *VEHICLE SAFETY LABELS* subsection.

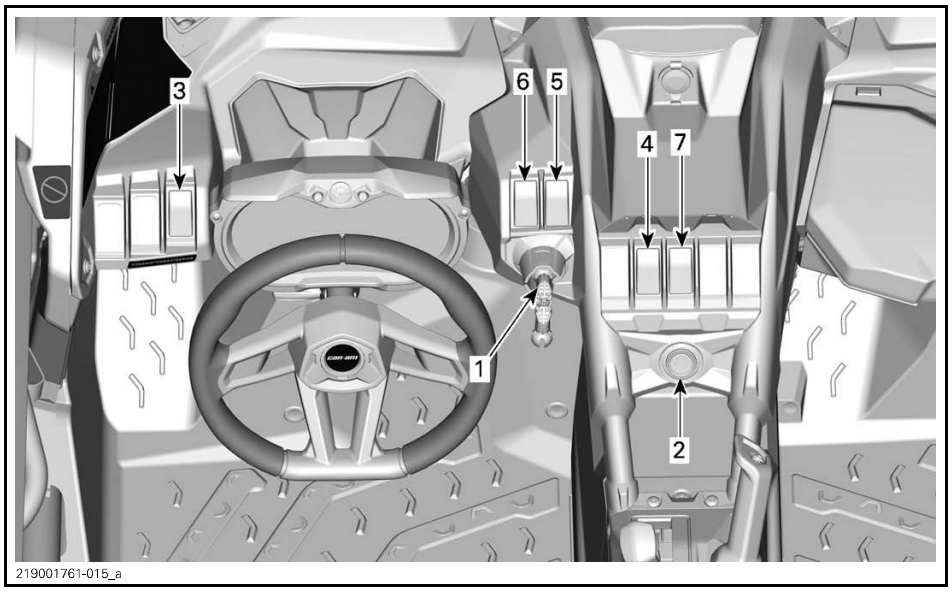

1) RF D.E.S.S Key and RF D.E.S.S. Post

RF D.E.S.S. Post

The D.E.S.S. post is located on the upper console.

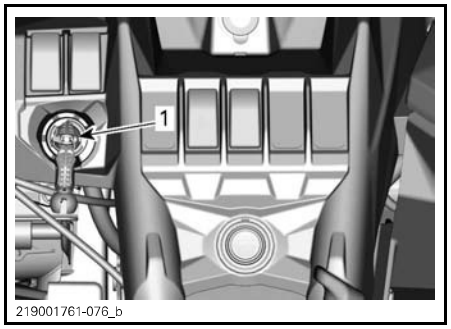

TYPICAL
1. D.E.S.S. post

RF D.E.S.S Key

Digitally Encoded Security System (D.E.S.S.)

The D.E.S.S. key contains an electronic circuit that gives it a unique electronic serial number.

The D.E.S.S. system reads the key code and allows engine starting for keys it recognizes.

Types of Keys

This vehicle can be operated using 2 different types of ignition keys:

- Learning key (green)
- Performance key (grey).

The key type is differentiated by its color.

⚠ WARNING

Rollovers, tipovers, collisions and loss of control resulting in serious injury or death are possible with the performance or learning keys. Using the normal key is not a substitute for the operator being prepared, qualified, and operating with care.

Learning Key

The vehicle is delivered with a learning key.

The learning key limits engine torque. It also limits the vehicle speed to 70 km/h (43 MPH).

⚠ WARNING

On steep downhills, the engine speed limiter may not prevent the vehicle from accelerating beyond this speed.

This key may be useful for riders who prefer more gradual acceleration, or for riding in environments where full speed and high acceleration are not desirable. For example, in narrow, winding trails, operators may prefer the learning key.

Performance Key

The vehicle is delivered with a performance key, which allows the user to access the full torque of the engine as well as the top speed of the vehicle.

This may be useful for riders who prefer greater acceleration, and for environments where higher speeds and greater acceleration are appropriate. For example, in wide-open, straight trails, operators may prefer the performance key.

2) Engine Start/Stop Button

The engine start / stop button is located on the upper console. When pressed and held, it starts the engine.

NOTE: The RF D.E.S.S. key must be installed on the RF D.E.S.S. post to allow engine start.

To power up the electrical system without starting the engine, refer to *WAKING UP THE ELECTRICAL SYSTEM*

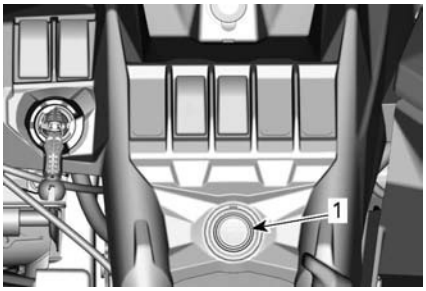

1. Engine start / stop button

3) Low/High Beam Headlight Switch

The low/high beam headlight switch is located on the LH side of dashboard.

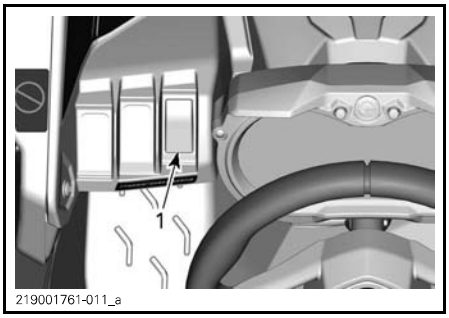

TYPICAL
1. Low/High beam headlight switch

This switch is used to select either the headlights low or high beams.

4) 2WD/4WD Switch

The 2WD/4WD switch is located on the upper console.

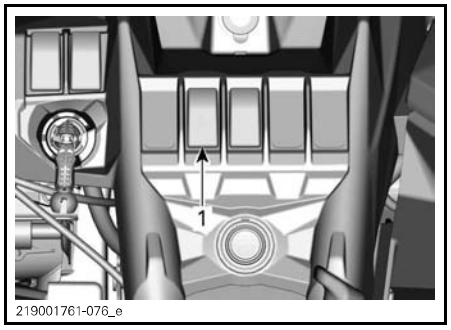

TYPICAL
1. 2WD/4WD switch

This switch selects 2 wheel drive or 4 wheel drive mode when the vehicle is stopped and the engine is running.

NOTICE **The vehicle must be stopped to engage or disengage 2WD/4WD switch. Mechanical damage may occur if switch is engaged or disengaged while driving.**

The 4WD mode is engaged when the switch is pushed upwards.

The 2WD mode is engaged when the switch is pushed downwards. The vehicle is then rear wheel drive only.

5) Sport/ECO Mode Switch

The sport/ECO switch is located on the upper console.

It is used to select the sport or ECO mode in high range.

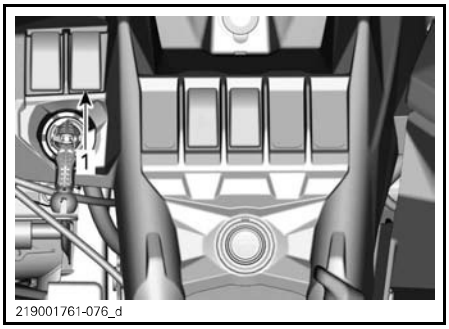

TYPICAL
1. Sport/ECO switch

The sport mode provides a crisper throttle response.

NOTE: The sport mode can be activated with all key types and provides the maximum power with the used key.

The ECO (fuel economy mode) setting reduces fuel consumption by limiting throttle response and maximum throttle opening to maintain an optimal cruising setting.

NOTE: Use ECO mode on bumpy trails to provide smoother ride conditions.

6) Override Switch

The override switch is located on the lower console.

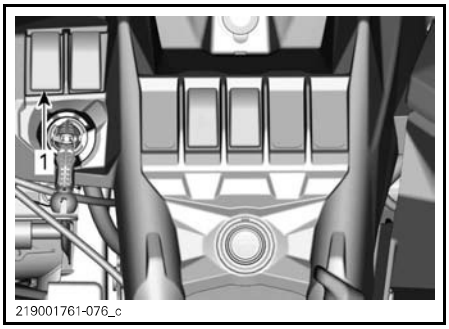

1. Override switch

The override switch main functions are:

1. To bypass the engine speed limiter in reverse operation by allowing maximum engine torque

⚠ WARNING

Only use the override to help get the vehicle unstuck from mud or other soft terrain. Do not use the override for normal operation in reverse. This would allow driving in reverse at excessive speeds and can increase the risk of losing control.

2. To temporarily deactivate the electronic drive belt protection (if available and activated on your model).

⚠ WARNING

Only use the override if it is not possible to shift in LOW range. Do not use the override for normal operation and always be aware of your surroundings when using the override.

3. To erase the MAINTENANCE REQUIRED message, refer to *MULTIFUNCTION DISPLAY* subsection.
4. To move vehicle in case of a pedal accelerator failure, refer to *TROUBLESHOOTING GUIDELINES* subsection.

To engage the override function, proceed as follows:

1. Ensure that the vehicle is stopped.
2. Press and hold the override switch then press the accelerator pedal gradually.

NOTE: While in REVERSE and using the override function, the gauge will scroll an OVERRIDE message to confirm that the function is activated.

3. To disengage the override function, simply release the override switch.

7) DPS Switch

The DPS switch is used to change the DPS (Dynamic Power Steering) mode.

To change mode, DPS switch needs to be held for at least 2 seconds. If held for less than 2 seconds, it will display the selected mode in the multifunction gauge.

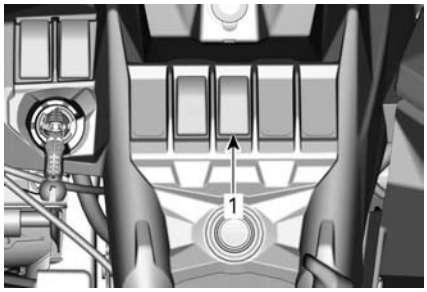

1. DPS switch

MULTIFUNCTION GAUGE (ANALOG/DIGITAL)

Multifunction Gauge Description

The multifunction gauge (analog/digital) is located on the steering column.

The multifunction gauge (analog/digital) is comprised of a digital gauge and two analog gauges (speedometer and tachometer).

The engine temperature and fuel level bar graphs are comprised in the digital gauge.

The indicators lamps are comprised in both analog gauges.

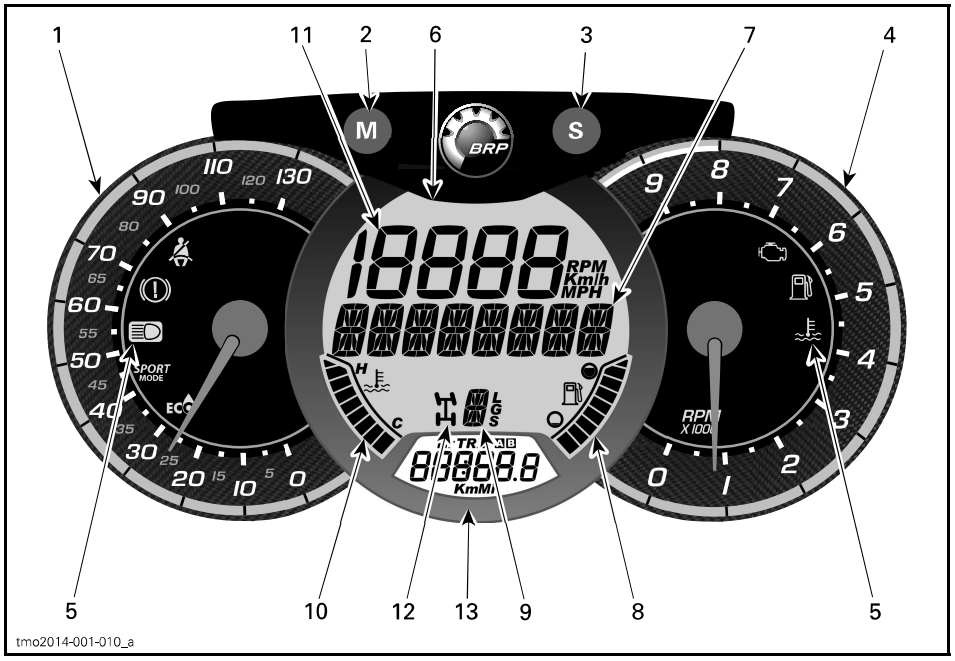

⚠ WARNING

Do not adjust the display while riding. You could lose control.

1) Analog Speedometer

Measures vehicle speed in km/h or mph.

2) MODE (M) Button

Pressing the MODE (M) button will scroll through the functions of the main digital display.

FUNCTION SEQUENCE	OPTIONS
Numerical Display is flashing	Press SET (S) to scroll and select desired function and press MODE (M) to confirm
Multifunction display is flashing	Press SET (S) to scroll and select desired function and press MODE (M) to confirm

3) SET (S) Button

Pressing the SET (S) button will scroll through the functions of the secondary digital display.

FUNCTION SEQUENCE	INFORMATION DISPLAYED
Clock	XX:XX (24:00 time base) XX:XX A or P (12:00 AM/PM time base)
Cumulative distance odometer	XXXXX.X km or mi
Trip distance — odometer A (TRIP A)	XXXXX.X km or mi
Trip distance — odometer B (TRIP B)	XXXXX.X km or mi
Engine time chronometer (Hr)	XXXXX.X
Trip time chronometer (HrTRIP)	XXXXX.X

To reset any trip functions, push and hold the SET (S) button for three seconds.

4) Analog Tachometer (RPM)

Measures engine revolutions per minute (RPM). Multiply by 1000 to obtain actual revolutions.

5) Indicator Lamps

Indicator lamps will inform you of various conditions or problems.

An indicator lamp can flash alone or in combination with another lamp.

INDICATOR LAMP(S)		DESCRIPTION
All indicator lamps	On	All indicator lamps are activated when D.E.S.S. key is installed and the engine is not started
	On	Low fuel
	On	Check engine
	On	High engine temperature
	On	Headlights in the HIGH beam position
	On	Brake pedal is depressed for more than 15 seconds
	On	Operator seat belt is not properly latched. Engine output will be limited, reducing the speed and operability of the vehicle. Main digital display: FASTEN SEAT BELT
	On	Sport mode activated
	On	ECO mode activated

6) Main Digital Display

Displays useful real-time information to the rider.

7) Multifunction Display

The vehicle speed or the engine revolutions (RPM) can be displayed. See *MODE (M) BUTTON* in this section.

Important messages can also be displayed. Refer to table below.

If an abnormal engine condition occurs, a message can be combined with a pilot lamp. Refer to *TROUBLESHOOTING* section for details.

MESSAGE	DESCRIPTION
BRAKE	Message displayed when the brakes are applied continuously for 15 seconds. (Speed needs to be higher than 5 km/h (3 MPH))
PERFORMANCE KEY	Displayed at power up when the performance key is used.
LEARNING KEY	Displayed at power up when the normal key is used.
WORK KEY	Displayed at power up when the work key is used.
OVERRIDE	Override is displayed when the override switch is pressed and the shift lever is set to reverse gear.
SEAT BELT	When the driver seat belt is not buckled and the vehicle speed is less than 10 km/h (6 MPH), the message is displayed and the pilot lamp will be lit. No engine torque limitation engaged.
ENGINE LIMITATION ENGAGED FASTEN SEAT BELT	When the driver seat belt is not buckled and the vehicle speed is above 10 km/h (6 MPH), the message is displayed and the pilot lamp stays on. The engine management will engage a torque limitation that will limit the vehicle speed to approximately 20 km/h (12 MPH).
SPORT MODE ACTIVE	Displayed when the sport mode is activated.
ECO MODE ACTIVE	Displayed when ECO mode is activated.
MAINTENANCE REQUIRED(1)	Displayed in gauge when vehicle is due for a maintenance.
LOW GEAR	Displayed when belt protection is active in high gear. (If available and activated on your model)

(1) To erase the MAINTENANCE REQUIRED message, proceed as follows:

1. Select PARK.
2. Wake the electrical system up. Refer to *WAKING UP THE ELECTRICAL SYSTEM*.

NOTE: The steps 3 through 9 must be completed within **5 seconds.**

3. Press override switch and HOLD.
4. Press and release brake pedal.
5. Release override switch.
6. Press and release brake pedal.
7. Press override switch and HOLD.
8. Press and release brake pedal.
9. Release override switch.

8) Fuel Level Indicator

Bar graph that continuously indicates the level of fuel left in the fuel tank.

9) Gearbox Position Indicator

Displays the selected gearbox position.

10) Engine Temperature Indicator

Bar graph that continuously indicates the engine coolant temperature.

11) Numerical Display

The vehicle speed or the engine revolutions (RPM) can be displayed. See *MODE (M) BUTTON* in this section.

12) 2WD/4WD Indicator

When this indicator is ON, the 4WD system is activated.

13) Secondary Digital Display

Displays useful real time information to the rider. For display function informations, refer to *SET (S) BUTTON*.

Gauge Setup

Setting Metric/Imperial Units

See a Can-Am dealer for adjustments.

Setting Clock

1. Press MODE (M) button to select clock display.
2. Push and hold MODE (M) button for three seconds.
3. Press MODE (M) button to select 12:00 AM PM or 24:00 time base.
4. If 12:00 AM PM time base is selected, A or P flashes. Press MODE (M) button to select A (AM) or P (PM).
5. Press SET (S) button to change hours.
6. Press MODE (M) button to switch to minutes (minutes flash).
7. Press SET (S) button to change minutes.
8. Press MODE (M) button.

Setting Language

The gauge display language can be changed. Refer to an authorized Can-Am dealer for language availability and setup the gauge to your preference.

EQUIPMENT

NOTE: Some vehicle safety labels are not shown on illustrations. For information on vehicle safety labels, refer to *VEHICLE SAFETY LABELS* subsection.

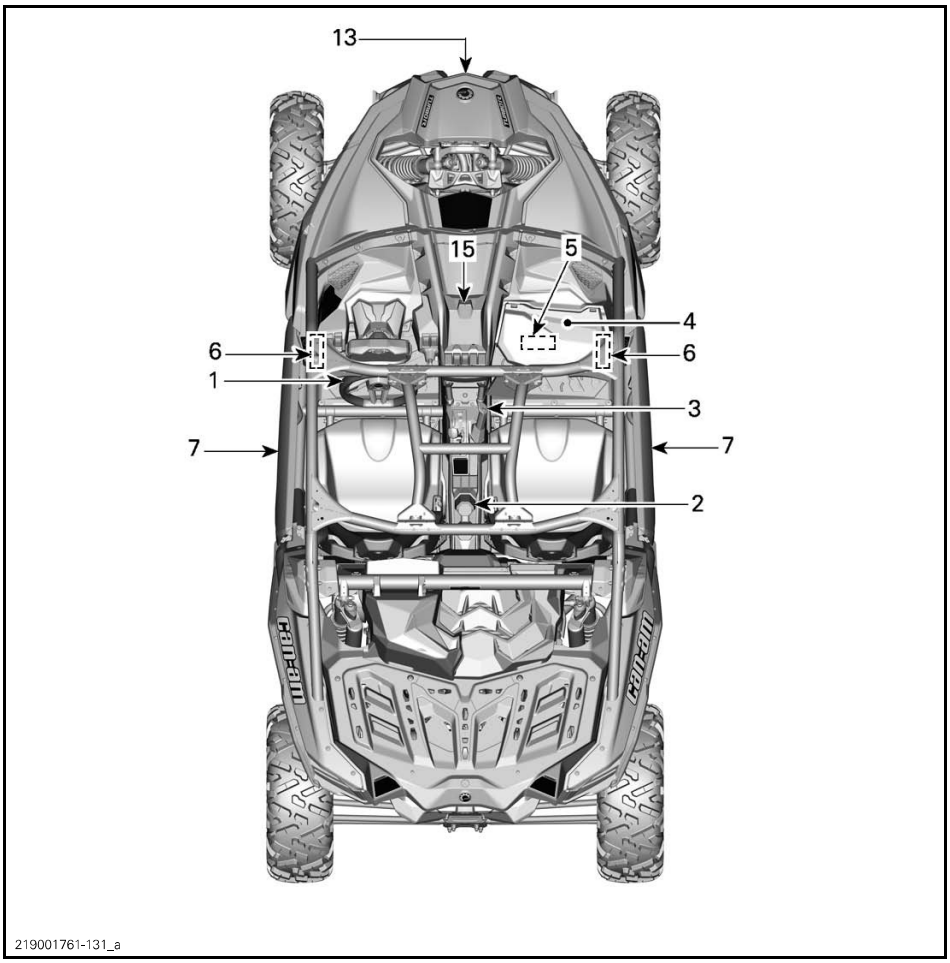

TYPICAL

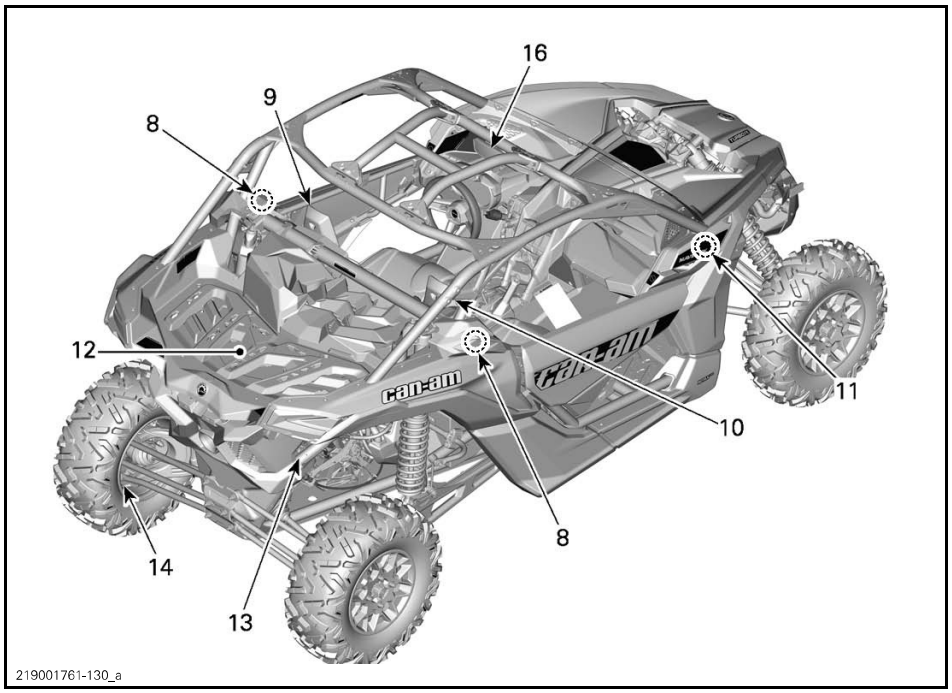

TYPICAL

1) Tilt Steering

The steering wheel height is adjustable.

Adjust the steering wheel height to face your chest, not your head.

To adjust steering wheel height:

1. Unlock steering by pulling the tilt lever toward you.
2. Move steering wheel to the desired position.
3. Release tilt lever to lock steering wheel in position.

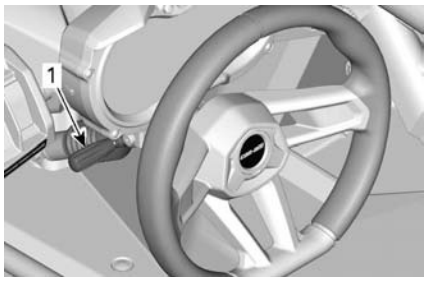

1. Tilt lever

⚠ WARNING

Never adjust the steering wheel height while riding. You may lose control.

2) Cup Holders

Two cup holders are located at the rear of the lower console.

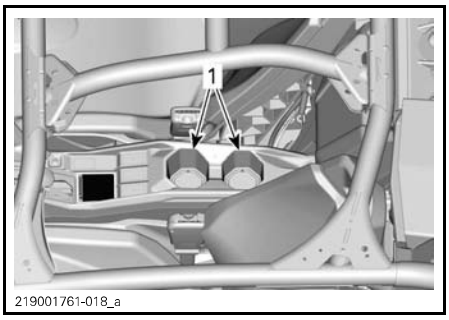

TYPICAL
1. Cup holders

NOTE: Do not use cup holders while riding in rough conditions.

3) Passenger Handholds

There is one passenger handhold on the console and one in the RH door.

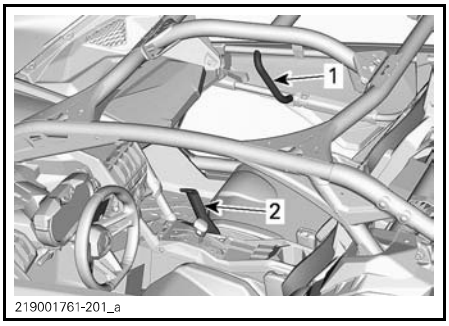

1. Door handhold
2. Console handhold

Holding the handholds helps the passenger brace against the movement of the vehicle and helps keep hands and body inside the cockpit in the event of a rollover.

⚠ WARNING

Never use any part of vehicle cage as handholds. Hands can be struck by objects outside the cockpit or crushed in a rollover.

4) Glove Box

The vehicle is equipped with a closed glove box made to carry light objects.

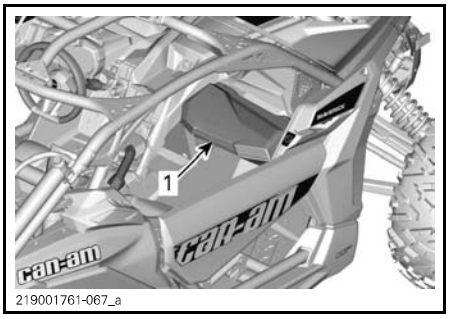

1. Glove box

GLOVE BOX CAPACITY	
MAXIMUM LOAD	5 kg (11 lb)

5) Tool Kit

A tool kit with basic tools is provided. It is located in the glove box.

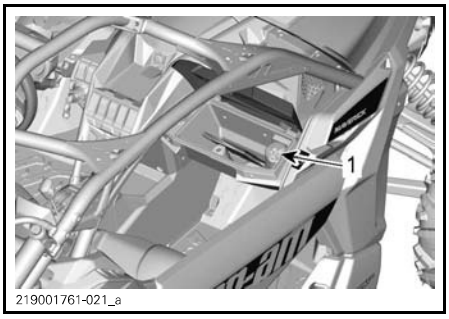

1. Tool kit

6) Footrests

The vehicle is equipped with driver and passenger footrests to allow firmly planting feet on vehicle floor, which helps to maintain proper body position while riding.

The footrests help minimize the risk of leg or foot injury.

Always wear appropriate footwear. See *RIDING GEAR* subsection.

7) Doors

Vehicle is equipped with doors to help occupants maintain their entire body and limbs inside the vehicle; thus reducing the risk of injuries. Doors may also keep brush and debris out of the cockpit.

⚠ WARNING

Never operate vehicle unless both doors are closed and secured.

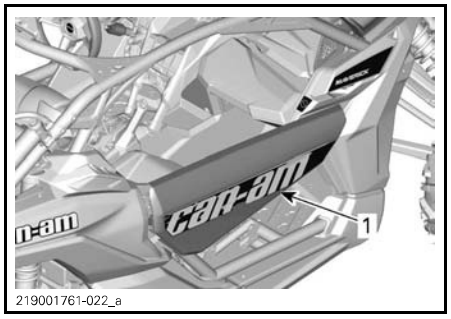

1. Door closed and locked in place

To unlock doors, pull on the strap to release the latch.

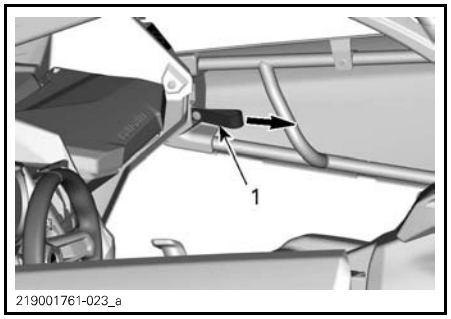

1. Latch strap

8) Seat Belts

This vehicle is equipped with seat belts to help protect driver and passenger in the event of collisions, rollovers, or tipovers to help keep passengers in the cockpit.

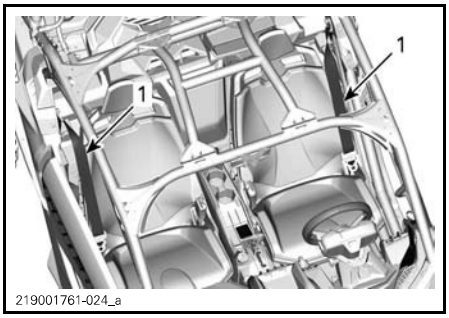

1. Safety belt

⚠ WARNING

Wear seat belts properly at all times. Make sure it remains securely fastened and tightened against the body. Seat belts reduce the risk of injury in a crash and help keep limbs inside the cockpit in a rollover or any accidents.

If driver's seat belt is not fastened when:

- The the start button is pressed, the seat belt indicator lamp will flash.
- The engine is started and shift lever is moved out of PARK, vehicle speed will be limited to a maximum of approximately 20 km/h (12 MPH) on flat ground.

⚠ WARNING

The vehicle may reach higher or lower speed depending on inclines.

To remind you to fasten the seat belt, the multifunction gauge will display the following message: ENGINE LIMITATION ENGAGED FASTEN SEAT BELT.

⚠ WARNING

There is no indicator light or message for the passenger seat belt. The driver is responsible for the passenger safety and should ensure the passenger buckles the seat belt.

Fastening and Adjusting the 3 point Seat Belts

The seat belt is equipped with a slide locking tab.

This device locks the seat belt in the adjusted position.



SEAT BELT ENGAGED
1. Slide locking tab

Insert the seat belt latch plate into the buckle, then pull the belt to ensure it is properly fastened.

To lock: adjust the seat belt tightly against your body by pulling the shoulder belt upwards.



⚠ WARNING

Wear seat belt properly. Make sure it remains securely fastened and tightened against the body. Make sure it is not twisted or defective.

To unlock: place seat belt as shown and push down on the lap belt where indicated.

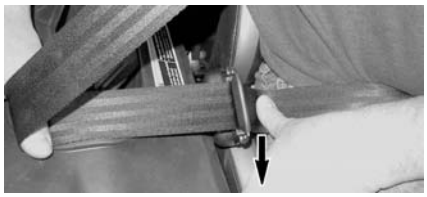

To release the seat belt, push on the red button on the seat belt buckle.

9) Driver's Seat

The driver's seat height can be adjusted. Refer to *SEAT HEIGHT ADJUSTMENT* for information.

To adjust seat, move the seat lever to unlock the seat. Release the lever to lock the seat into desired position.

⚠ WARNING

Never adjust the seat position while driving.

The driver's seat can be removed by removing retaining nuts securing seat to frame. Refer to *SEAT HEIGHT ADJUSTMENT*.

Seat Cushion Removal and Installation

Pull up the rear of the cushion, then free the cushion from the seat frame by pulling it off towards the rear.

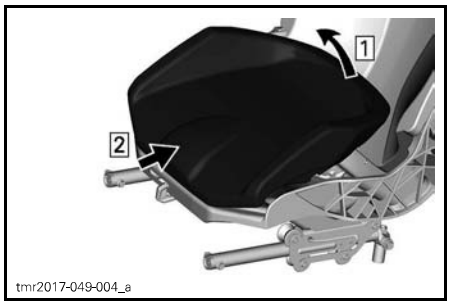

Seat Height Adjustment

Seat height can be adjusted.

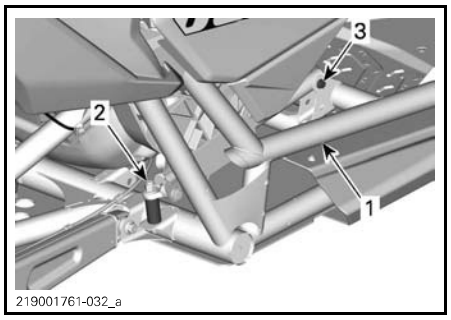

1. *Frame support*
2. *Rear adjustment mechanisms*
3. *Front adjustment mechanisms*

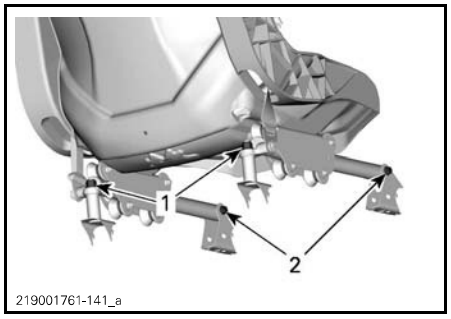

SEAT HEIGHT ADJUSTMENT MECHANISM
1. *Rear adjustment mechanisms*
2. *Front adjustment mechanisms*

⚠ WARNING

Ensure both mechanisms at the front and both mechanisms at the rear are set to the same position (HIGH or LOW) before riding the vehicle.

Setup in HIGH Position

Remove both retaining nuts securing rear adjustment mechanism assemblies.

Remove both retaining nut securing front adjustment mechanisms in place.

Assemble both rear adjustment mechanisms as follows.

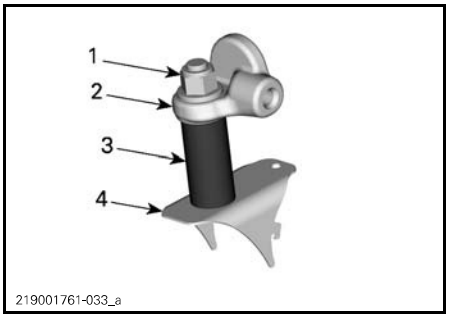

REAR ADJUSTMENT MECHANISM IN POSITION HIGH
1. *Retaining nut*
2. *Seat frame*
3. *Sleeve*
4. *Vehicle frame*

Assemble both front adjustment mechanisms as follows.

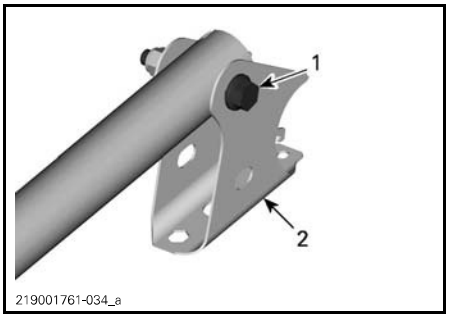

FRONT ADJUSTMENT MECHANISM IN POSITION HIGH
1. *Retaining bolt*
2. *Bracket support*

⚠ WARNING

Ensure both mechanisms at the front and both mechanisms at the rear are set to the same position (HIGH or LOW) before riding the vehicle.

Tighten both nuts to specification.

TIGHTENING TORQUE	
Rear adjustment mechanism	105 N•m ± 15 N•m (77 lbf•ft ± 11 lbf•ft)
Front adjustment mechanism	24.5 N•m ± 3.5 N•m (18 lbf•ft ± 3 lbf•ft)

Setup in LOW Position

Remove retaining nuts securing rear adjustment mechanism assemblies.

Remove retaining nut securing front adjustment mechanisms in place.

Assemble both rear adjustment mechanisms as follows.

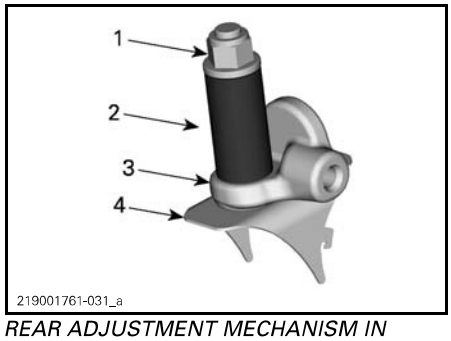

REAR ADJUSTMENT MECHANISM IN POSITION LOW
1. *Retaining nut*
2. *Sleeve*
3. *Seat frame*
4. *Vehicle frame*

Assemble both front adjustment mechanisms as follows.

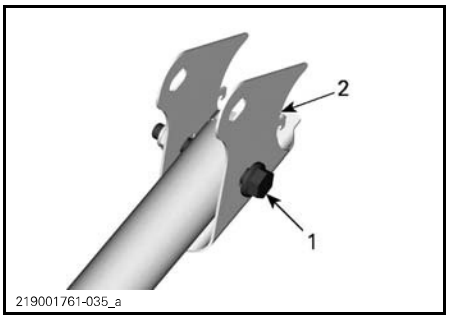

FRONT ADJUSTMENT MECHANISM IN POSITION LOW
1. *Retaining bolt*
2. *Bracket support*

⚠ WARNING

Ensure both mechanisms at the front and both mechanisms at the rear are set to the same position (HIGH or LOW) before riding the vehicle.

Tighten both nuts to specification.

TIGHTENING TORQUE	
Rear adjustment mechanism	105 N•m ± 15 N•m (77 lbf•ft ± 11 lbf•ft)
Front adjustment mechanism	24.5 N•m ± 3.5 N•m (18 lbf•ft ± 3 lbf•ft)

10) Passenger Seat

The passenger seat's height can be adjusted. Refer to *SEAT HEIGHT ADJUSTMENT* for information.

To adjust seat, move the seat lever to unlock the seat. Release the lever to lock the seat into desired position.

⚠ WARNING

Never adjust the seat position while driving.

The passenger seat can be removed by removing retaining nuts securing seat to frame. Refer to *SEAT HEIGHT ADJUSTMENT*.

The seat cushion can easily removed, refer to *SEAT CUSHION REMOVAL AND INSTALLATION* for procedure.

11) Fuel Reservoir Cap

Open fuel reservoir cap cover.

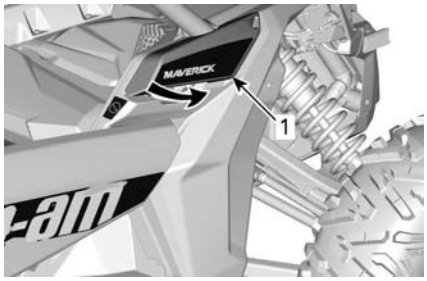

1. Fuel reservoir cap cover

The fuel reservoir cap is located at front on the right hand side of the vehicle.

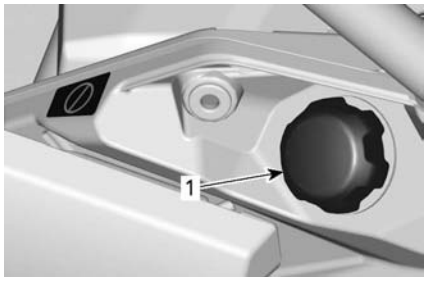

1. Fuel reservoir cap

Refer to *FUEL* subsection for information on fueling procedure and fuel requirements.

12) Cargo Rack

Cargo rack is convenient for carrying equipment and various other cargo. It must never be used to carry a passenger.

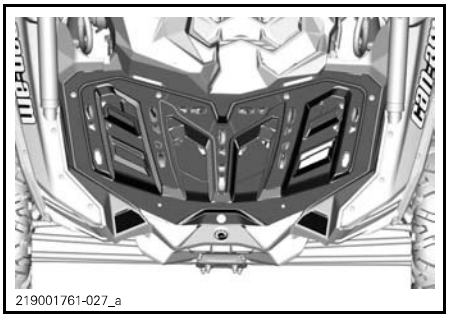

CARGO RACK

⚠ WARNING

- Never carry a passenger on a cargo rack.
- Cargo must never interfere with the drivers line of sight or affect his ability to properly steer the vehicle.
- Do not overload the vehicle.
- Always ensure all cargo is properly secured and does not extend out passed the rack.
- Never carry gasoline container(s) or any dangerous liquids on the cargo rack unless it is designed and approved for this vehicle.

Refer to *SPECIFICATIONS* subsection for cargo weight recommendations.

13) Recovery Hook

Convenient hook that can be use to recover a stuck vehicle.

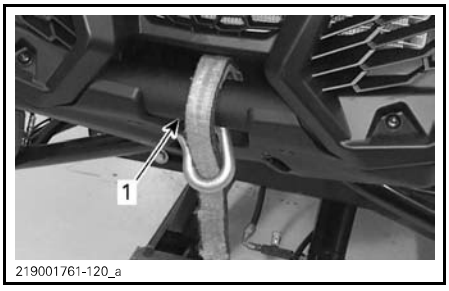

1. Front recovery hook

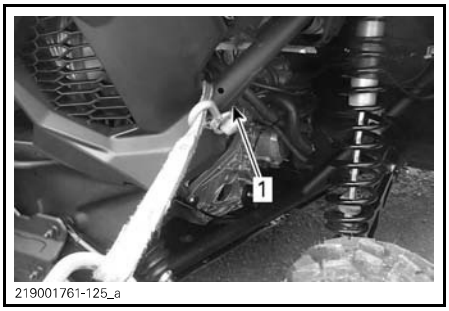

1. Rear recovery hook

14) Wheel Scraper

Located inside the rear wheels to reduce accumulation of mud in the wheels that can damage parts inside the wheels.

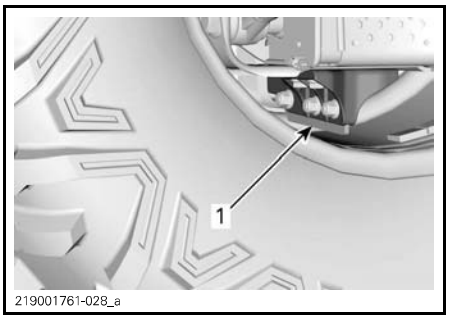

1. Wheel scraper

Check wheel scraper condition. Replace when wear exceeds wear limit at any location.

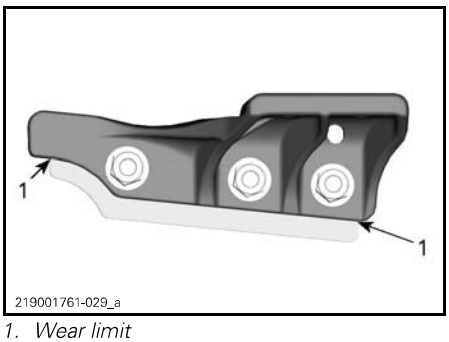

1. Wear limit

15) 12-Volt Power Outlet

Convenient for handheld spotlight or other portable equipment.

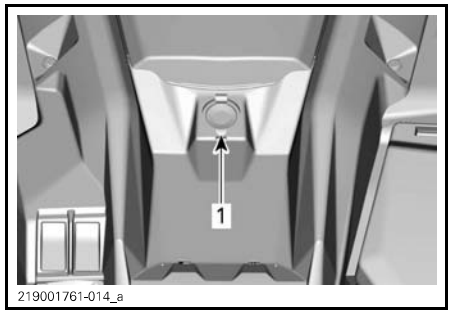

1. 12 V power outlet

Remove protective cap to use. Always reinstall it after use to protect against weather.

Do not exceed the rating capacity. Refer to *SPECIFICATIONS* subsection.

16) Central Mirror

This vehicle comes equipped with a central mirror.

The mirror can be adjusted to suit driver's preference.

To adjust mirror; loosen knob located behind mirror and tighten it to secure mirror in position.

⚠ WARNING

Do not adjust mirror when riding, you could lose control.

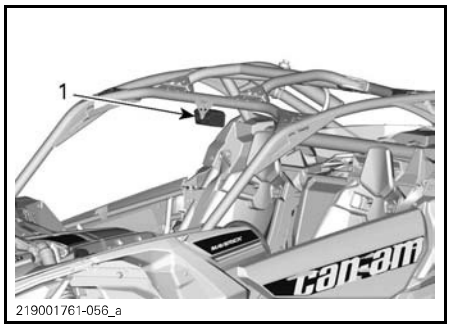

1. Central mirror

Suspension Adjustment Guidelines

Your vehicle handling and comfort depend upon suspension adjustments.

⚠ WARNING

Suspension adjustment could affect vehicle handling. Always take time to familiarize yourself with the vehicle's behavior after any suspension adjustment has been made.

Choice of suspension adjustments vary with vehicle load, personal preference, riding speed and terrain condition.

The best way to set up the suspension, is to start from factory settings, then customize each adjustment one at a time.

Front and rear adjustments are interrelated. It may be necessary to readjust the rear shock absorbers after adjusting front shock absorbers for instance.

Test run the vehicle under the same conditions; trail, speed, load, etc. Change one adjustment and retest. Proceed methodically until you are satisfied.

Following are guidelines to fine-tune suspension.

Adjustment Location

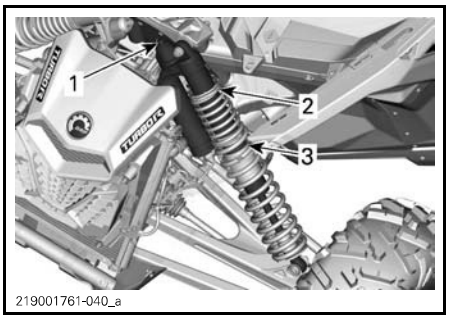

TYPICAL - MAVERICK X3 MODELS - FRONT SUSPENSION
1. *Compression damping*
2. *Preload*
3. *Spring Crossover*

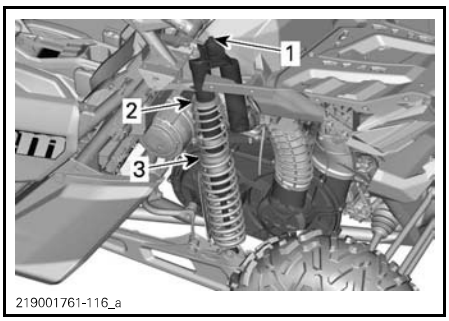

TYPICAL - MAVERICK X3 MODELS - REAR SUSPENSION
1. *Compression damping*
2. *Preload*
3. *Spring Crossover*

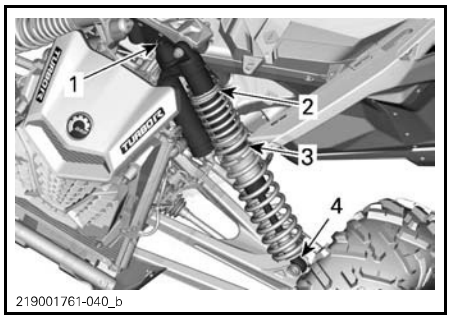

TYPICAL - MAVERICK X3 X DS *AND X* RS *MODELS - FRONT SUSPENSION*
1. *Compression damping (high speed and low speed)*
2. *Preload*
3. *Spring Crossover*
4. *Rebound damping*

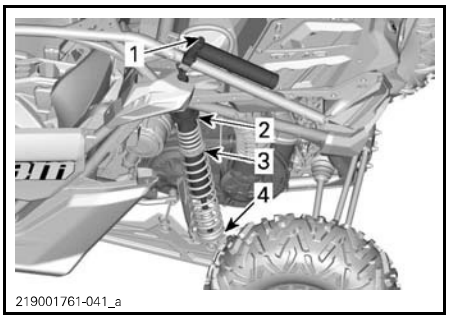

TYPICAL - MAVERICK X3 X RS *MODELS - REAR SUSPENSION*
1. *Compression damping (high speed and low speed)*
2. *Preload*
3. *Spring Crossover*
4. *Rebound damping*

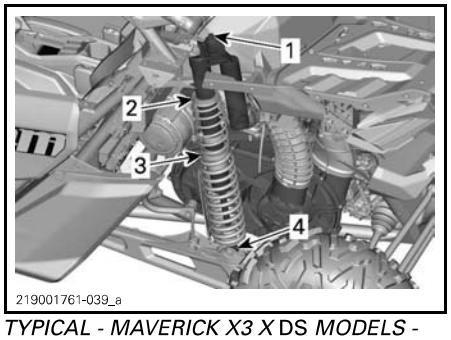

TYPICAL - MAVERICK X3 X DS *MODELS - REAR SUSPENSION*
1. *Compression damping (high speed and low speed)*
2. *Preload*
3. *Spring Crossover*
4. *Rebound damping*

Suspension Factory Settings

For adjustment procedures, refer to *SPRING PRELOAD ADJUSTMENT (FRONT AND REAR)* and *SHOCK DAMPING ADJUSTMENTS (FRONT AND REAR)* in this section.

To adjust compression and rebound to factory settings, proceed as follows:

1. Turn adjuster clockwise until it stops.
2. Turn adjuster counterclockwise by the specified amount, see table below.

FRONT SUSPENSION FACTORY SETTINGS		
ADJUSTMENT	MODEL	FACTORY SETTING
Spring preload	Maverick X3	36.8 mm (1.45 in)
	Maverick X3 X ds	38.5 mm (1.52 in)
	Maverick X3 X rs	53 mm (2.09 in)
Compression damping	Maverick X3	Position 2
Compression damping (low speed)	Maverick X3 X ds	2 Turns
	Maverick X3 X rs	2 Turns
Compression damping (high speed)	Maverick X3 X ds	2 Turns
	Maverick X3 X rs	3 Turns

FRONT SUSPENSION FACTORY SETTINGS		
ADJUSTMENT	MODEL	FACTORY SETTING
Rebound damping	Maverick X3 X ds	Position 12
	Maverick X3 X rs	Position 12
Crossover ring position	Maverick X3	122.8 mm (4.83 in)
	Maverick X3 X ds	120 mm (4.72 in)
	Maverick X3 X rs	71 mm (2.8 in)

REAR SUSPENSION FACTORY SETTINGS		
ADJUSTMENT	MODEL	FACTORY SETTING
Spring preload	Maverick X3	89 mm (3.5 in)
	Maverick X3 X ds	96.7 mm (3.81 in)
	Maverick X3 X rs	105.8 mm (4.17 in)
Compression damping	Maverick X3	Position 2
Compression damping (low speed)	Maverick X3 X ds	2 Turns
	Maverick X3 X rs	2 Turns
Compression damping (high speed)	Maverick X3 X ds	3 Turns
	Maverick X3 X rs	3 Turns
Rebound damping	Maverick X3 X ds	Position 15
	Maverick X3 X rs	Position 12
Crossover rings position	Maverick X3	126.1 mm (4.96 in)
	Maverick X3 X ds	121.1 mm (4.77 in)
	Maverick X3 X rs	154.6 mm (6.09 in)

Suspension Adjustments

Spring Preload Adjustment

NOTE: Spring preload affects ground clearance.

Shorten the spring for a firmer ride and rough riding condition or when pulling a trailer (if equipped with hitch).

Lengthen the spring for a softer ride and smooth riding condition.

⚠ WARNING

The left and right shock adjustment on front or rear suspension must always be set to the same position. Never adjust one shock only. Uneven adjustment can cause poor handling and loss of stability, which could lead to an accident.

Lift the vehicle. Spring length should be measured without load on the wheels.

Spring length should be equal on both sides.

Adjust by loosening lock ring and turning adjuster ring as desired. Use tool from vehicle tool kit.

NOTE: Do not increase the front/rear spring preload by more than 15 mm (.59 in)over the factory setting.

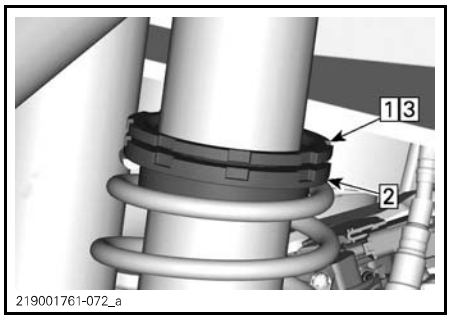

TYPICAL
Step 1: Loosen top locking ring
Step 2: Turn adjusting ring accordingly
Step 3: Tighten top locking ring

Shock Damping Adjustments (Maverick X3)

Compression damping controls how the shock absorber reacts when riding.

POSITION	SETTING	RESULT ON BIG BUMPS
1	Soft	Softer compression damping
2	Medium (Factory)	Medium compression damping
3	Hard	Firmer compression damping

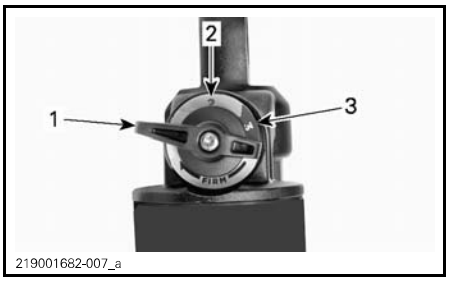

1. *Position 1*
2. *Position 2*
3. *Position 3*

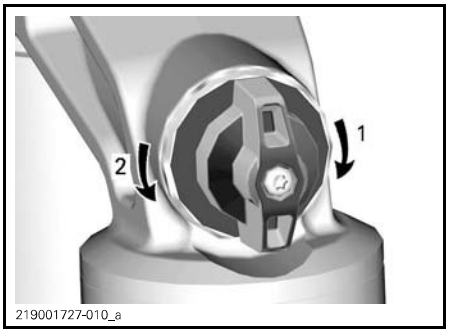

COMPRESSION DAMPING
1. **Increases** *damping (stiffer)*
2. **Decreases** *damping (softer)*

Turn adjuster clockwise to **increase** shock damping action (stiffer).

Turn adjuster counterclockwise to **decrease** shock damping action (softer).

ACTION	RESULT
Increasing compression damping force	Firmer compression damping
Decreasing compression damping force	Softer compression damping

⚠ WARNING

Make sure compression damping setting is the same on both sides.

Low Speed Compression Damping (Maverick X3 X ds and Maverick X3 X rs)

Low speed compression damping controls how the shock absorber reacts to a low suspension velocity (slow compression strokes, in most cases when riding at lower speeds).

ACTION	RESULT ON BIG BUMPS
Increasing low speed compression damping force	Firmer compression damping (slow compression)
Decreasing low speed compression damping force	Softer compression damping (slow compression)

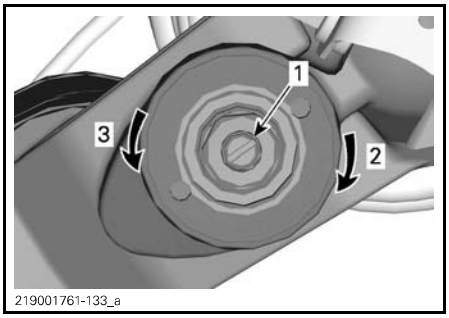

LOW SPEED COMPRESSION DAMPING (USE A SCREWDRIVER)
1. *Adjustment screw*
2. **Increases** *compression damping (stiffer)*
3. **Decreases** *compression damping (softer)*

Turning it clockwise (H) **increases** shock damping action (stiffer).

Turning it counterclockwise (S) **decreases** shock damping action (softer).

High Speed Compression Damping (Maverick X3 X ds and Maverick X3 X rs)

High speed compression damping controls how the shock absorber reacts to a high suspension velocity (quick compression strokes, in most cases when riding at higher speeds).

ACTION	RESULT ON SMALL BUMPS
Increasing high speed compression damping force	Firmer compression damping (fast compression)
Decreasing high speed compression damping force	Softer compression damping (fast compression)

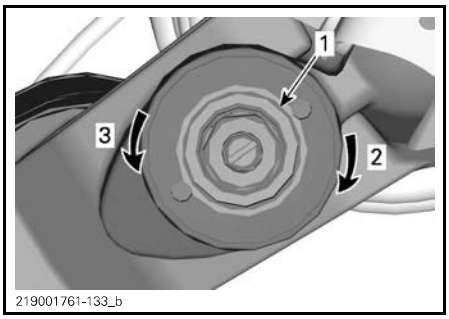

HIGH SPEED COMPRESSION DAMPING (USE A 17 MM WRENCH)
1. *Adjustment screw*
2. **Increases** *compression damping (stiffer)*
3. **Decreases** *compression damping (softer)*

Rebound Damping (Maverick X3 X ds and Maverick X3 X rs)

Use a flat screwdriver to adjust it.



1. *Rebound adjuster*
2. **Increases** *rebound (stiffer)*
3. **Decreases** *rebound (softer)*

Adjusting Spring Crossover

Dual compression rate crossover point can be modified by adjusting the crossover rings position. See an authorized Can-Am dealer.

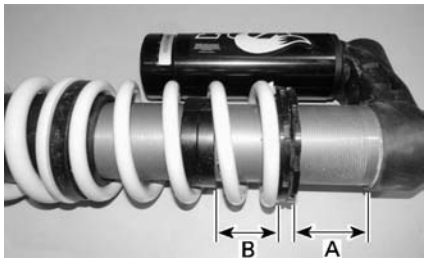

TYPICAL - CROSSOVER ADJUSTMENT - REAR SHOCK
A. Spring preload
B. Crossover ring position

DPS Function

The applicable models are equipped with a Dynamic Power Steering (DPS) system. The DPS reduces the effort to turn the steering wheel.

The following DPS modes are preset in the vehicle.

DPS MODE	
DPS MAX.	Maximum steering assist
DPS MED.	Medium steering assist
DPS MIN.	Minimum steering assist

To show the active DPS mode, proceed as follows:

1. Press and release **DPS** switch.

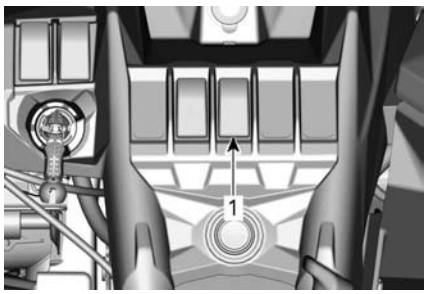

1. DPS switch

2. Check the multifunction gauge to confirm the active DPS mode.

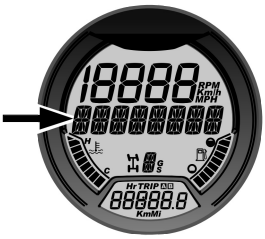

ANALOG/DIGITAL GAUGE
1. DPS mode display

To change the DPS mode, proceed as follows:

1. Press and hold **DPS** switch for 2 seconds to go to the next setting.
2. Release **DPS** switch.
3. Repeat until desired setting is selected.

NOTE: The DPS adjustment will not be possible if the vehicle transmission is set to **REVERSE**.

FUEL

Fuel Requirements

NOTICE Always use fresh gasoline. Gasoline will oxidize; the result is loss of octane, volatile compounds, and the production of gum and varnish deposits which can damage the fuel system.

Alcohol fuel blending varies by country and region. Your vehicle has been designed to operate using the recommended fuels, however, be aware of the following:

- Use of fuel containing alcohol above the percentage specified by government regulations is not recommended and can result in the following problems in the fuel system components:
  - Starting and operating difficulties.
  - Deterioration of rubber or plastic parts.
  - Corrosion of metal parts.
  - Damage to internal engine parts.
- Inspect frequently for the presence of fuel leaks or other fuel system abnormalities if you suspect the presence of alcohol in gasoline exceeds the current government regulations.
- Alcohol blended fuels attract and hold moisture which may lead to fuel phase separation and can result in engine performance problems or engine damage.

Recommended Fuel

Use premium unleaded gasoline with an AKI (R+M)/2 octane rating of 91, or an RON octane rating of 95.

NOTICE Never experiment with other fuels. Engine or fuel system damages may occur with the use of an inadequate fuel.

NOTICE Do NOT use fuel from fuel pumps labeled E85.

Use of fuel labeled E15 is prohibited by U.S. EPA Regulations.

Vehicle Fueling Procedure

⚠ WARNING

- Fuel is flammable and explosive under certain conditions.
- Never use an open flame to check fuel level.
- Never smoke or allow flame or spark in vicinity.
- Always work in a well-ventilated area.
- Vehicle must be on a level surface to perform fueling.

1. Place vehicle on a level surface.
2. Stop engine.

⚠ WARNING

Always stop engine before refueling.

3. Have driver and passenger get out of vehicle.

⚠ WARNING

Do not allow anyone to remain in the vehicle while fueling. If there is a fire or explosion during fueling, a vehicle occupant could be unable to quickly leave the area.

4. Open the fuel reservoir cap cover.

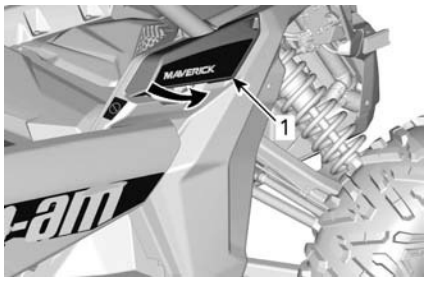

1. Fuel reservoir cap cover

5. Slowly unscrew the fuel reservoir cap counterclockwise to remove it.

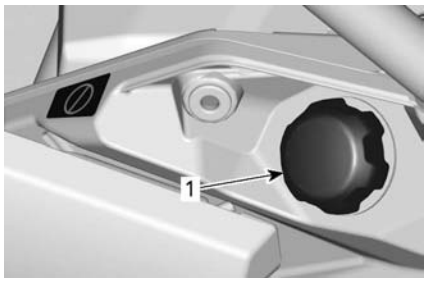

1. Fuel reservoir cap

⚠ WARNING

If a differential pressure condition is noticed (whistling sound heard when loosening fuel reservoir cap) have vehicle inspected and/or repaired before further operation.

6. Insert the spout into the filler neck.
7. Pour fuel slowly so that air can escape from the tank and prevent fuel flow back. Be careful not to spill fuel.
8. Stop filling when the fuel reaches the bottom of filler neck. **Do not overfill.**

⚠ WARNING

Never top up the fuel tank before placing the vehicle in a warm area. As temperature increases, fuel expands and may overflow.

9. Fully tighten fuel reservoir cap clockwise until you hear a clicking noise.

⚠ WARNING

Always wipe off any fuel spillage from the vehicle.

Fueling a Gasoline Container

⚠ WARNING

- **Use only an approved gasoline container to store fuel.**
- **Never fill the gasoline container on-the vehicle - an electrical static discharge may ignite the fuel.**

BREAK-IN PERIOD

Operation During Break-In

A break-in period of 10 operating hours or 300 km (200 mi) is required for the vehicle.

Engine

During the break-in period:

- Avoid full throttle operation.
- Avoid pressing accelerator pedal more than 3/4 of the stroke.
- Avoid sustained accelerations.
- Avoid prolonged cruising speeds.

However, brief accelerations and speed variations contribute to a good break-in.

Brakes

⚠ WARNING

New brakes will not operate at their maximum efficiency until their break-in is completed. Braking performance may be reduced, so use extra caution.

Belt

A new belt requires a break in period of 50 km (30 mi).

During the break-in period:

- Avoid strong acceleration and deceleration.
- Avoid pulling a load.
- Avoid high speed cruising.

BASIC PROCEDURES

Starting the Engine

Install D.E.S.S. key on D.E.S.S. post.

Press the brake pedal.

NOTE: If shift lever is not set to PARK (P), the brake pedal must be pressed to allow engine starting.

Press the engine start button and hold until the engine starts.

NOTE: Do not press the accelerator pedal. If the accelerator pedal is pressed at least 20%, the engine will not start.

Release the engine start button immediately when the engine has started.

NOTICE If engine does not start after a few seconds, do not hold the engine start button more than 10 seconds. Refer to *TROUBLESHOOTING* section.

Wait approximately 10 seconds to let engine oil flow through engine and turbo.

Waking Up the Electrical System

Press and release the START button for less than half a second and the electrical system will turn ON:

- For 20 seconds, **without** powering any equipment, if the D.E.S.S. key is **NOT** installed on the D.E.S.S. post.
- For 10 minutes, powering equipment, if the D.E.S.S. key is installed on the D.E.S.S. post. The electrical system will shutdown after 20 seconds if the D.E.S.S. key is removed.

NOTICE Waking up the electrical system repeatedly or using electrical equipment will discharge the battery and you may not be able to start the engine.

Shifting the Transmission

Apply brakes and select the desired shift lever position.

Release brakes.

NOTICE When changing gear selection, always completely stop the vehicle and apply the brakes prior to shifting. Damage to the transmission may occur.

Choosing the Correct Range (Low or High)

It is important to limit situations known to make the drive belt slip excessively. The main reason the drive belt will slip is if the gearbox is in high range when it should be in low range.

Pay attention to the following:

Low range

Low range should be used whenever:

- Pulling
- Pushing
- Hauling a load
- 4x4 applications
- Mud holes
- Water holes
- Crossing obstacles
- Climbing onto trailer
- Hill climbing

It is also recommended to use low range if driving for prolonged periods at speeds under 24 km/h (15 MPH)

Please refer to *BREAK-IN PERIOD* subsection in this guide for information in regards to belt break-in period.

High range

High is the default riding range.

Electronic Drive Belt Protection (if available and activated on your model)

Some vehicles have the electronic drive belt protection function activated.

Refer to your authorized Can-Am dealer for availability and possible activation.

This function is activated when riding at too slow speed for the high range, such as in the following situations:

- Pulling
- Pushing
- Hauling a load
- 4x4 applications
- Mud holes
- Water holes
- Crossing obstacles
- Climbing onto trailer
- Hill climbing

In the above mentioned situations the electronic drive belt protection will help protect the CVT drive belt from being damaged by activating the engine torque limiter. The gauge will also scroll a *LOW GEAR* message, suggesting the operator to immobilize the vehicle and set to LOW GEAR.

Whenever the electronic drive belt protection is activated, you MUST shift in LOW range. Refer to *SHIFTING THE TRANSMISSION*.

If the situation does not allow you to shift in LOW range, it is possible to temporarily deactivate the electronic drive belt protection by pressing on the override switch. Refer to *OVERRIDE SWITCH*.

⚠ WARNING

DO NOT USE THE OVERRIDE SWITCH if the slope is too steep and that there might be a risk of tipover. Apply brakes to immobilize vehicle. Put shift lever in reverse (R), and back down the hill, barely releasing brakes to remain at low speed. Do not attempt to turn around. Never coast down hill while vehicle is in neutral. Do not perform hard braking as it increases the risk of tipover.

Stopping the Engine and Parking the Vehicle

⚠ WARNING

Avoid parking on steep slope as the vehicle may roll away.

⚠ WARNING

Always put the vehicle in PARK when stopped or parked to prevent rolling.

⚠ WARNING

Avoid parking in places where hot parts can start a fire.

When stopped or parked always bring shift lever to park position. This is especially important when parking on a slope. On very steep inclines or if the vehicle is carrying a cargo, the wheels should be blocked using rocks or bricks.

Select the flattest terrain available for parking.

Release accelerator pedal and use brakes to completely stop the vehicle.

Set shift lever in PARK position.

Press the start / stop button to stop the engine.

Remove D.E.S.S key from its post.

If you must park on a steep incline or if the vehicle is carrying cargo, block the wheels using rocks or bricks.

Before stopping the engine and parking the vehicle following a more intense ride, let vehicle run idle for a period of 20 to 30 seconds to allow for cooling of the turbo system.

Tips for Maximizing Drive Belt Durability

Riding style and conditions have a direct impact on drive belt durability. Your vehicle features a CVT system design that is optimized to offer the best performance. The CVT and drive belt have successfully endured thousands of miles of durability tests. However, to maximize drive belt durability and to prevent premature failures, it is important that the operator understands the limits of a belt driven CVT system and adapts their riding style and speed accordingly.

If riding in any of the conditions listed below, BRP highly recommends not to constantly hold the throttle wide open (WOT) for more than five (5) minutes.

- High ambient temperatures (above 30°C (86°F)
- Heavy loads: Passengers / Heavy cargo
- Heavy drag: Soft sand / Hill climbing / Mud / Using a track kit.

After a few minutes at WOT, partially release the accelerator and allow the CVT to cool down.

For more tips for maximizing the drive belt durability, refer to *CHOOSING THE CORRECT RANGE (LOW OR HIGH)*.

What to do if Water is Suspected to be in the CVT

If water is present in the CVT, the engine will accelerate but the vehicle will remain still.

NOTICE Stop the engine and drain the water to avoid damage to the CVT.

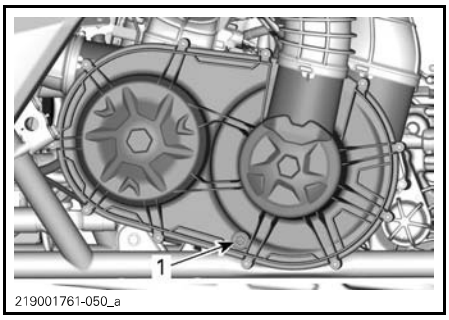

1. CVT drain

The CVT drain is accessible from under the rear of vehicle on the LH side.

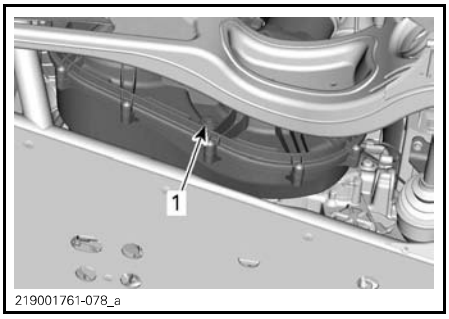

1. CVT drain

See an authorized Can-Am dealer to have the CVT inspected and cleaned.

What to do if Battery is Drained out

The vehicle can be jump started by using the red (+) cable to the battery positive pole and the black (-) cable to the vehicle chassis.

NOTICE Do not connect any electrical source to the steering column.

What to do if Vehicle Rolled Over

Abrupt maneuvers, sharp turns, side hilling or accident may cause vehicle to rollover.

Should the vehicle be rolled over, it will be necessary to have it transported to an authorized Can-Am dealer for inspection as soon as possible. NEVER START THE ENGINE!

Points to be verified, including but not limited to:

- All fluid levels
- Seat belts, including retractors, buckles and locking tabs
- Cage
- Steering system
- Suspension

What to do if Vehicle is Submerged

Should the vehicle become immersed, it will be necessary to have it transported to an authorized Can-Am dealer as soon as possible.

NOTICE Never start the engine as immersion of the vehicle can cause serious damage to the engine if the correct restart procedure is not followed.

TRANSPORTING THE VEHICLE

If your vehicle needs to be transported, it should be carried on a flatbed trailer of the proper size and capacity.

NOTICE **Do not tow this vehicle — towing can seriously damage the vehicle's drive system.**

When contacting a towing or transporting service, be sure to ask if they have a flatbed trailer, loading ramp or power ramp to safely lift the vehicle and tie-down straps. Ensure the vehicle is properly transported as specified in this section.

NOTICE **Avoid using chains to tie the vehicle — they may damage the surface finish or plastic components.**

⚠ WARNING

If the vehicle is equipped with a windshield, transport it facing forward to avoid damaging the windshield.

To load the vehicle on a platform for transport, proceed as follow:

1. Place shift lever to NEUTRAL (N).
2. Then proceed as follows:
   - 2.1 Put a strap around the front recovery hook.



1. Front recovery hook

   - 2.2 Attach the straps to the winch cable of the towing vehicle.
   - 2.3 Pull the vehicle on the flatbed with the winch.
3. Remove the key from the D.E.S.S. post.
4. At rear, secure the vehicle on both sides using a strap around the central suspension arm as close to the wheel as possible.

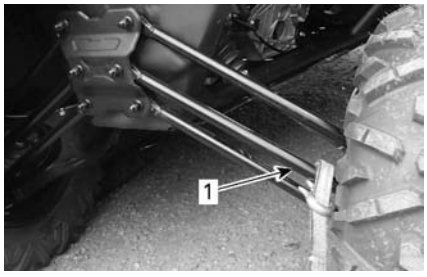

1. Rear central suspension arm

5. At front, secure the vehicle on both sides using a strap around the lower suspension arm as close to the wheel as possible.

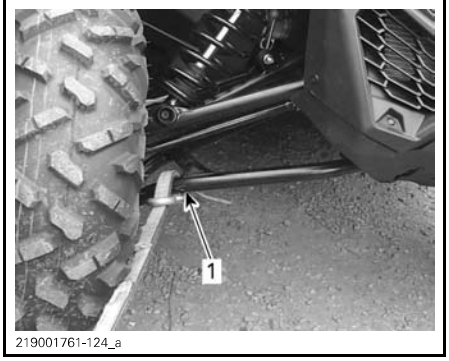

1. Front lower suspension arm

6. Strap the rear tires by using tire towing straps.
7. Firmly attach the rear suspension tie-down straps to both sides of the rear of the trailer with ratchets.
8. Ensure that both the front and rear wheels are firmly attached to the trailer.

⚠ WARNING

Make sure no loose objects are present inside vehicle during vehicle transportation.

LIFTING AND SUPPORTING THE VEHICLE

Front of Vehicle

Place vehicle on a flat non slippery ground.

Ensure vehicle shift lever is set to PARK.

Install an hydraulic jack under the round tube.

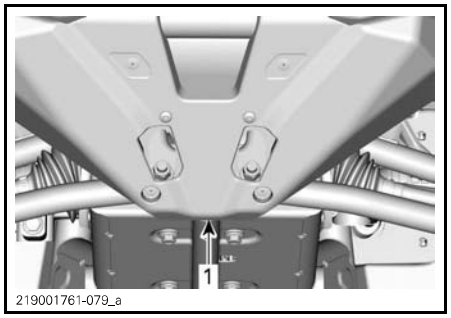

FRONT OF VEHICLE
1. Hydraulic jack position

Lift front of vehicle and install a jack stand on each side under frame as shown below:

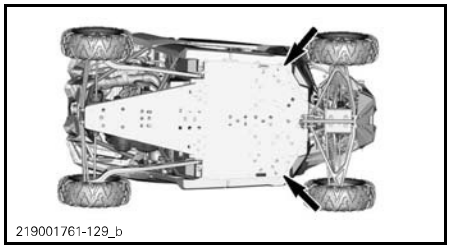

JACK STAND POSITIONS - FRONT OF VEHICLE

Lower hydraulic lift and ensure vehicle is supported safely onto both jack stands.

Rear of Vehicle

Place vehicle on a flat non slippery ground.

Activate 4WD mode.

Ensure vehicle shift lever is set to PARK.

Install an hydraulic jack under the vehicle.

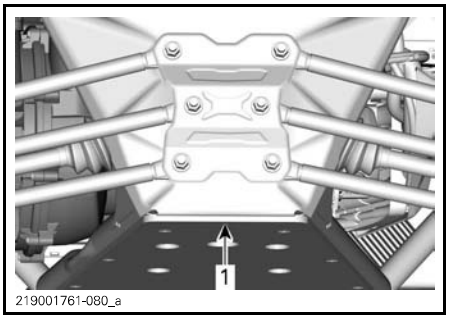

REAR OF VEHICLE
1. Hydraulic jack position

Lift rear of vehicle and install a jack stand on each side under frame as shown below:

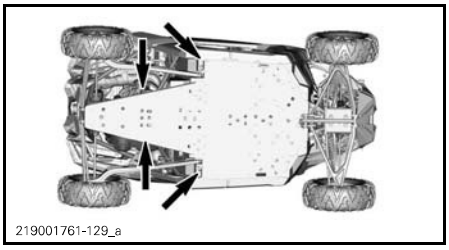

JACK STAND POSITIONS - REAR OF VEHICLE

Lower hydraulic lift and ensure vehicle is supported safely onto both jack stands.

This page is intentionally blank

MAINTENANCE

MAINTENANCE SCHEDULE

Maintenance is very important for keeping your vehicle in safe operating condition. Proper maintenance is the owner's responsibility. The vehicle should be serviced as per the maintenance schedule.

A repair shop or person of the owner's choosing may maintain, replace, or repair emission control devices and systems. These instructions do not require components or service by BRP or authorized Can-Am dealers. Although an authorized Can-Am dealer has an in-depth technical knowledge and tools to service the Can-Am SSV, the emission-related warranty is not conditioned on the use of an authorized Can-Am dealer or any other establishment with which BRP has a commercial relationship. For emission-related warranty claims, BRP is limiting the diagnosis and repair of emission-related parts to the authorized Can-Am dealers. For more information, please refer to the *US EPA EMISSION-RELATED WARRANTY* contained herein. Proper maintenance is the owner's responsibility. A warranty claim may be denied if, among other things, the owner or operator caused the problem through improper maintenance or use.

You must follow the instructions for fuel requirements in the fueling section of this manual. Even if gasoline containing greater than ten volume percent ethanol is readily available, the US EPA issued a prohibition against the use of gasoline containing greater than 10 vol% ethanol that applies to this vehicle. The use of gasoline containing greater than 10 vol% ethanol with this engine may harm the emission control system.

The following message appears in the gauge after every 50 hours of operation, to remind you of maintenance requirements: MAINTENANCE REQUIRED. To erase message, refer to *MULTIFUNCTION DISPLAY* subsection.

The maintenance schedule does not exempt the pre-ride inspection.

⚠ WARNING

Failure to properly maintain the vehicle according to the maintenance schedule and procedures can make it unsafe to operate.

SEVERE DUSTY CONDITIONS

Air Filter Maintenance Guideline

Air filter maintenance should be adjusted according to riding conditions.

Air filter maintenance must be increased in frequency in the following dusty conditions:

- Riding on dry sand
- Riding on dry dirt covered surfaces
- Riding on dry gravel roads or similar conditions.

NOTE: Riding in a group in these conditions would increase even more the air filter maintenance.

MAINTENANCE SCHEDULE LEGEND

Operation in trail riding conditions
Operation in severe riding conditions (dusty or muddy) or carrying heavy loads condition

MAINTENANCE SCHEDULE

Make sure to perform proper maintenance at recommended intervals as indicated in the tables. Some items of the maintenance schedule must be performed in function of the calendar, regardless of the distance or time of operation.

EVERY YEAR OR 3 000 KM (2,000 MI) OR 100 HOURS (whichever comes first)
EVERY YEAR OR 1 500 KM (1,000 MI) OR 50 HOURS (whichever comes first)
Check fault codes
Perform all items indicated in the pre-ride inspection
Replace engine oil and filter
Inspect gearbox oil level and look for contamination
Inspect and clean engine air filter. Replace if needed
Inspect steering system for abnormal play and damages (column, rack and pinion, bellows)
Inspect the tie rod ends and ball joints for play and inspect boots condition
Inspect wheel bearings for abnormal play
Inspect suspension arm bushing and wear plates. Replace if needed
Inspect front and rear shock absorber spherical bearing O-rings (if damaged, clean, lubricate and reinstall O-rings)
Lubricate suspension arms and stabilizer bar bushings (Front / Rear)
Inspect CV joints and rubber boots condition (check for abnormal play in the joints and for cuts in the rubber boots)
Inspect and clean the brake system (fluid level, pads, discs, lines, calipers)
Inspect front differential oil level and look for contamination and overall condition (vents, mount bolt torque, seals)
Inspect battery condition and connections
Inspect propeller shaft U-joints for abnormal play
Clean exhaust pipes and muffler area
Clean muffler spark arrester
Replace fuel vent breather filter
Inspect CVT drive belt and clean CVT pulleys
Inspect, clean and lubricate drive pulley needle bearing
Inspect centrifugal levers and rollers of drive pulley
Inspect input and output shaft seals (engine, gearbox, differential)
Inspect beadlock screws (if equipped)

EVERY YEAR OR 3 000 KM (2,000 MI) OR 100 HOURS (whichever comes first)
EVERY YEAR OR 1 500 KM (1,000 MI) OR 50 HOURS (whichever comes first)
Inspect rear wheel scrapers wear plates
Tighten cage fasteners (if equipped with a replacement cage)
Inspect, clean and validate operation of seat belts retractors, buckles and locking tabs
Verify coolant level and adjust if needed

PERFORM AT THE FIRST 3 000 KM (2,000 MI)AND AT 6 000 KM (4,000 MI) THEN FOLLOW THE REGULAR SCHEDULE
PERFORM AT THE FIRST 1 500 KM (1,000 MI) AND AT 3 000 KM (2,000 MI) THEN FOLLOW THE REGULAR SCHEDULE
Replace gearbox oil

EVERY TWO YEAR OR 6 000 KM (4,000 MI) OR 200 HOURS (whichever comes first)
EVERY TWO YEAR OR 3 000 KM (2,000 MI) OR 100 HOURS (whichever comes first)
Check fault codes
Perform all items indicated in the pre-ride inspection
Replace front differential oil
Replace gearbox oil.
Replace brake fluid (must be performed every 2 years)
Test engine coolant strength + level
Verify fuel system for leaks
Verify fuel pump pressure (idle and wide open throttle)
Replace spark plugs
Clean vehicle speed sensor

EVERY 5 YEAR OR 12 000 KM (8,000 MI) (whichever comes first)
EVERY 5 YEAR OR 6 000 KM (4,000 MI) (whichever comes first)
Replace engine coolant

MAINTENANCE PROCEDURES

This section includes instructions for basic maintenance procedures.

NOTE: Maintenance message can be removed by alternately pressing the override switch and brake pedal 3 times at power up.

⚠ WARNING

Unless otherwise indicated, always remove D.E.S.S. key from the D.E.S.S. post before performing any maintenance and remove key.

⚠ WARNING

Should removal of a locking device be required (e.g. lock tab, self-locking fastener, etc.) , always replace it with a new one.

Engine Air Filter

NOTICE Never modify the air intake system. Otherwise, engine performance degradation or damage can occur. The engine is calibrated to operate specifically with these components.

Engine Air Filter Replacement Guideline

Engine Air filter replacement frequency should be adjusted according to riding conditions as it is critical to ensure proper engine performance and life span.

Engine Air filter replacement frequency must be increased for the following severe riding conditions:

- Riding on dry sand.
- Riding on dry dirt covered surfaces.
- Riding on dry gravel trails or similar conditions.
- Riding in areas with high concentration of seeds or crop husks.
- Riding in severe snow conditions.

NOTICE When riding in dusty conditions or sand, the airbox needs to be cleaned before every ride.

NOTE: Riding in a group under these conditions would increase even more the air filter replacement frequency.

Engine Air Filter Removal

Pull the outer seal outwards using the fabric tabs.

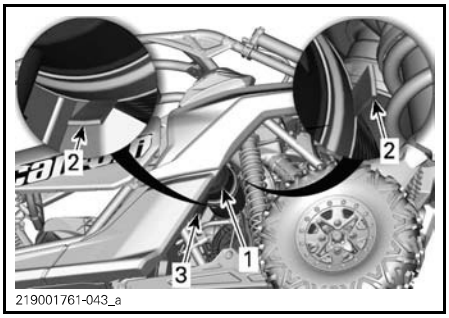

LH REAR OF VEHICLE
1. *Air filter cover*
2. *Fabric tabs*
3. *Duckbill valve*

Pull on the yellow plastic tab to unlock the filter cover.

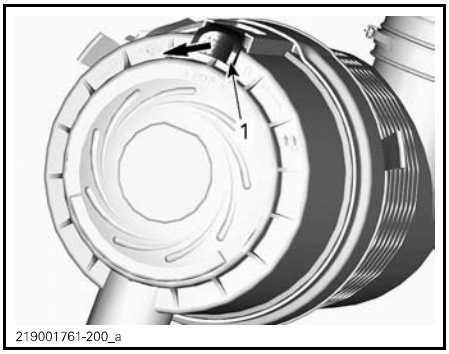

1. *Plastic tab*

Remove the filter cover by turning it counterclockwise.

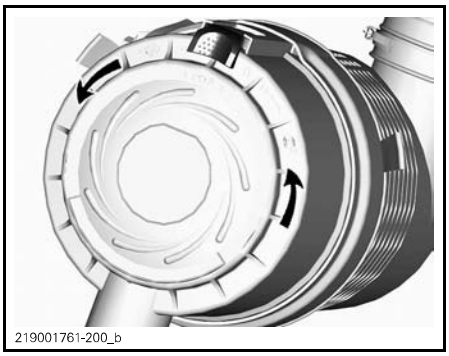

Remove the filter cartridge.

Engine Air Filter Housing Cleaning

Inspect air filter housing for cleanliness.

NOTICE If sand or other particles are found in air filter housing, clean it using a vacuum cleaner.

Engine Air Filter Cleaning

Clean engine air filter by tapping out heavy dust from paper element, this will allow dirt and dust to get out of the paper filter.

NOTICE It is not recommended to blow compressed air on the paper element; this could damage the paper fibers and reduce its filtration ability when used in dusty environments. If engine air filter is too dirty and cannot be cleaned following the recommended procedure, it should be replaced.

Engine Air Filter Installation

Install air filter cartridge.

Install filter cover with the "TOP" mark upwards (duckbill valve downwards). Turn cover clockwise to secure it.

Lock the cover by pushing the plastic tab inwards.

Slide the outer seal in place using the fabric tabs.

Front Grille Kit

1. Remove debris from front grille.
2. Clean front grille with water.

CVT Air Filters

CVT air filter inspection and cleaning frequency should be adjusted according to riding conditions as it is critical to ensure proper engine performance and life span.

CVT Air filter inspection and cleaning frequency must be increased for the following severe riding conditions:

- Riding on dry sand.
- Riding on dry dirt covered surfaces.
- Riding on dry gravel trails or similar conditions.
- Riding in muddy conditions.
- Riding in areas with high concentration of seeds or crop husks.
- Riding in severe snow conditions.

NOTE: Riding in a group in these conditions would increase even more the air filter replacement requirement.

CVT Air Filter Removal

Open the air box cover.

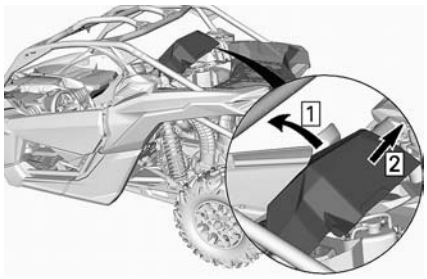

Remove CVT filter from vehicle.

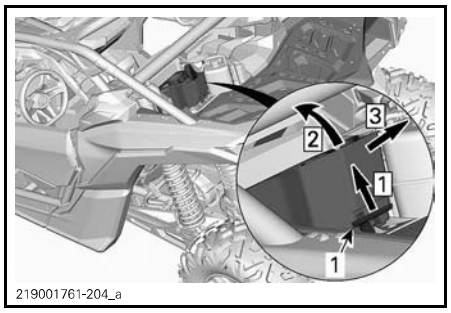

1. CVT air filter

Step 1: Unlatch
Step 2: Lift the rear part
Step 3: Pull off

CVT Air Filter Inspection and Cleaning

Inspect filter and replace if necessary.

Remove CVT filter. Refer to *CVT FILTER REMOVAL* and clean it using soft soap and water then rinse with water.

Gently shake off excess water and allow filter to dry at room temperature.

CVT Air Filter Installation

Reinstall filter:

– Insert the three tabs at front of the filter in the corresponding slots
– Securely latch the filter.

Reinstall the air box cover. Make sure it is properly secured.

Engine Oil

Engine Oil Level Verification

NOTICE Operating the engine with an improper level may severely damage engine.

With the engine at normal operating temperature, place vehicle on a level surface and check the oil level as follows:

1. Start engine and let it idle for at least 20 seconds.
2. Stop engine.
3. Unscrew dipstick then remove it and wipe clean.

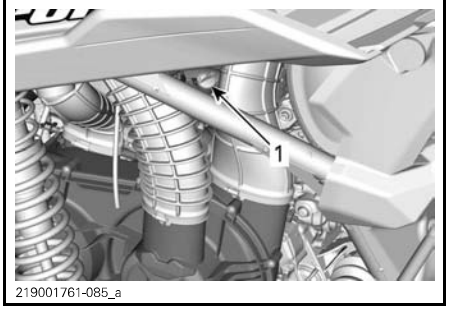

LH REAR OF VEHICLE
1. Dipstick

4. Reinstall dipstick, screw it in completely.
5. Remove dipstick and check oil level. It should be near or equal to the upper mark.

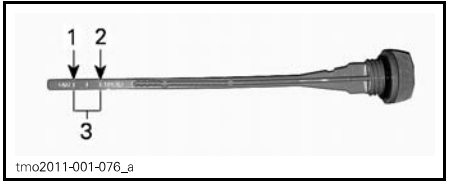

TYPICAL
1. MIN
2. MAX
3. Operating range

To add oil, remove the dipstick. Place a funnel into the dipstick tube.

Add a small amount of recommended oil and recheck oil level.

Repeat the above procedures until oil level reaches the dipstick's upper mark.

NOTE: Do not overfill. Wipe off any spillage.

Properly tighten dipstick.

Recommended Engine Oil

RECOMMENDED ENGINE OIL	
SEASON	TYPE
Summer	XPS 4-STROKE SYNTH. BLEND OIL (P/N 293 600 121)
All seasons	XPS 4-STROKE SYNTHETIC OIL (P/N 293 600 112)

NOTE: The XPS oil is specially formulated to meet the lubrication requirements of this engine. BRP recommends the use of its XPS 4-stroke oil. If XPS engine oil is not available, use a 4-stroke SAE 5W 40 engine oil that meets or exceeds the requirements for API service classification SJ, SL, SM or SN. Always check the API service label certification on the oil container it must contain at least one of the above standards.

NOTICE Damages caused by the use of oil not suitable for this engine may not be covered by the BRP limited warranty.

Engine Oil Change

Place vehicle on a level surface.

Oil change and oil filter replacement should be done with a warm engine.

CAUTION The engine oil can be very hot. Wait until engine oil is warm.

Remove dipstick.

Place a drain pan under the engine drain plug area.

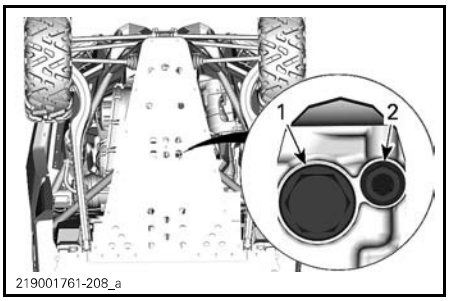

UNDERNEATH REAR OF VEHICLE
1. *Magnetic drain plug*
2. *Secondary drain plug*

Clean the drain plugs area.

NOTE: A funnel can be used between the drain holes and the skid plate to avoid spillage.

Unscrew drain plugs and discard the gasket rings.

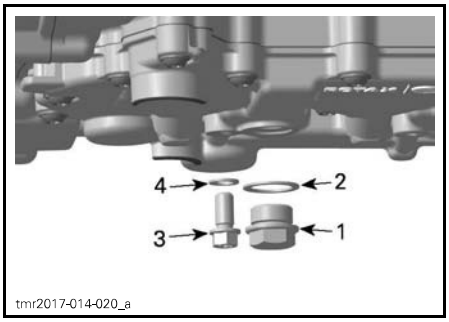

1. *Magnetic drain plug*
2. *Gasket ring*
3. *Secondary drain plug*
4. *Gasket ring*

Allow oil to drain completely from the crankcase.

Clean the magnetic drain plug from metal shavings and residue. Presence of debris gives an indication of internal engine damage.

Install a NEW gasket ring on the drain plug.

NOTICE Never use the gasket ring a second time. Always replace by a new one.

Install and tighten drain plug to the recommended torque.

TIGHTENING TORQUE	
Secondary drain plug	15 N•m ± 2 N•m (133 lbf•**in** ± 18 lbf•**in**)
Magnetic drain plug	30 N•m ± 3 N•m (22 lbf•ft ± 2 lbf•ft)

Replace oil filter. Refer to *OIL FILTER*.

Refill engine with recommended engine oil.

Check oil level, refer to *ENGINE OIL LEVEL VERIFICATION*.

ENGINE OIL CAPACITY	
Engine oil and engine oil filter replacement	3.5 L (3.7 qt (U.S. liq.))

Oil Filter

Oil Filter Access

Access the oil filter by the RH rear of the vehicle.

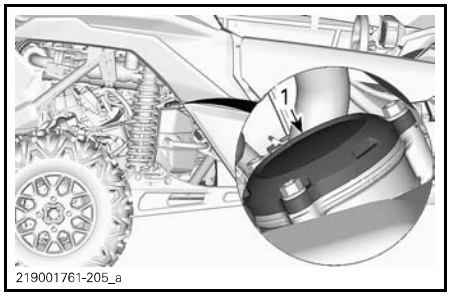

1. Oil filter cover

Oil Filter Removal

Clean oil filter area.

Remove oil filter cover.

Remove oil filter.

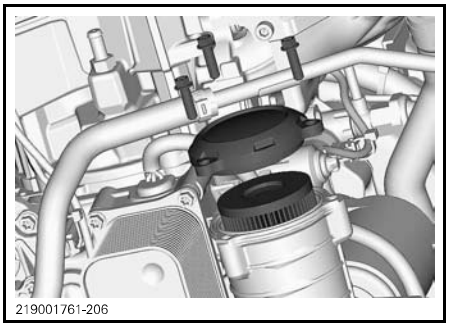

Oil Filter Installation

Check and clean the oil filter inlet and outlet area for dirt and other contaminations.

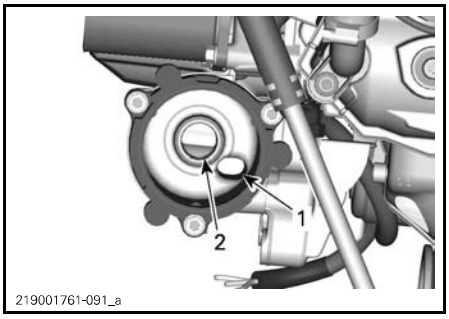

1. Outlet to the engine oil providing system
2. Inlet from the oil pump to the oil filter

Install a **NEW** O-ring on oil filter cover.

Install the filter into the cover.

Apply engine oil on O-ring and filter seal.

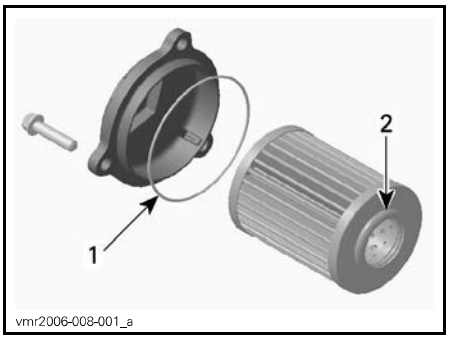

1. Slightly oil
2. Slightly oil

Install the cover on the engine.

Tighten oil filter cover screws to recommended torque.

TIGHTENING TORQUE	
Oil filter cover screws	10 N•m ± 1 N•m (89 lbf•**in** ± 9 lbf•**in**)

Radiator

Radiator Inspection and Cleaning

To access the radiator, remove the fascia cover.

⚠ CAUTION Wait for the radiator to cool down before proceeding.

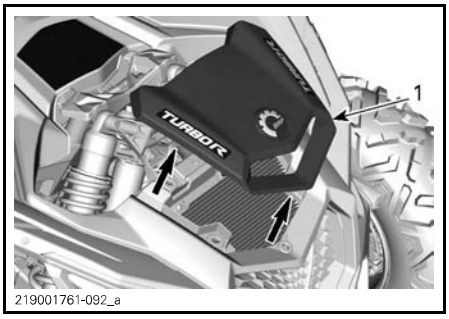

FASCIA COVER

Remove the radiator grille by pulling it off.

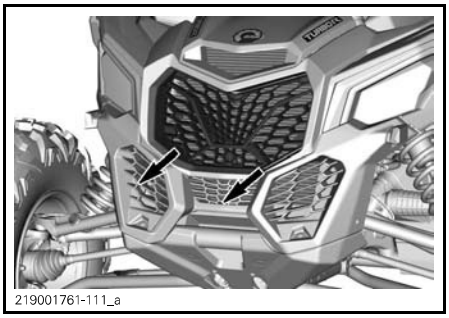

NOTICE Do not attempt to remove the lower grilles

Inspect radiator and hoses for leaks or any damage.

Inspect radiating fins. They must be clean, free of mud, dirt, leaves and any other deposit that would prevent the radiator to cool properly.

If available, use a garden hose to rinse the radiating fins.

⚠ CAUTION Never clean radiator with your hands when it is hot. Let the radiator cool down before cleaning.

NOTICE Be careful not to damage the radiating fins when cleaning. Do not use any object/tool that could damage the fins. When hosing, use low pressure only. Never use a HIGH PRESSURE washer.

Reinstall the fascia cover and grille.

Engine Coolant

Engine Coolant Level Verification

⚠ WARNING

Check coolant level with engine cold.

1. Place vehicle on a level surface.
2. Remove service cover by unlatching the rear lifting it upwards.

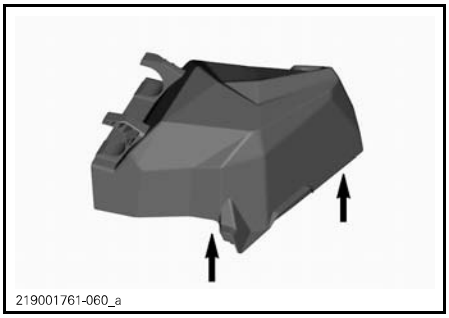

LIFTING REAR OF SERVICE COVER

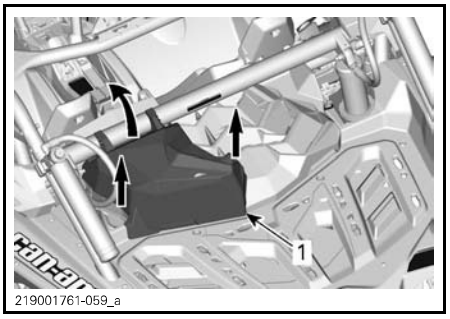

1. Service cover

3. Remove pressure cap.

⚠ WARNING

In order to avoid potential burns, do not remove the pressure cap if the engine is hot.

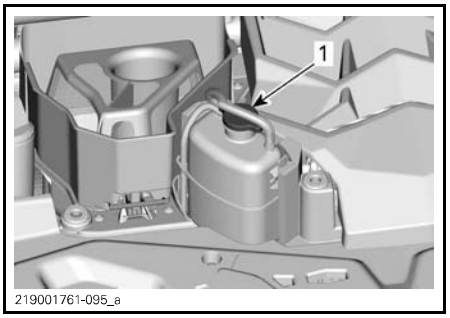

1. Pressure cap

4. Ensure cooling system is full up to the MAX line.



5. Add coolant in system as necessary. Use a funnel to avoid spillage. **Do not overfill.**
6. Reinstall pressure cap on cooling tank.

NOTE: Coolant level can be checked by looking at the side of the coolant bottle.

Recommended Engine Coolant

COUNTRY	RECOMMENDED COOLANT
Finland, Norway and Sweden	LONG LIFE ANTIFREEZE(F) (P/N 619 590 204)
All other countries	LONG LIFE ANTIFREEZE (P/N 219 702 685)
Alternative, or if not available	Distilled water and antifreeze solution (50% distilled water, 50% antifreeze)

NOTICE **Always use ethylene-glycol antifreeze containing corrosion inhibitors specifically for internal combustion aluminum engines.**

Engine Coolant Replacement

Cooling System Draining

⚠ WARNING

In order to avoid potential burns, do not remove the pressure cap or loosen the coolant drain plug if the engine is hot.

Lift the rear of the vehicle approximately 30 cm (12 in).

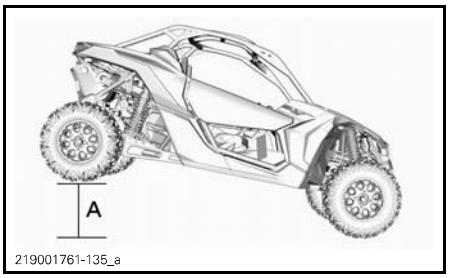

A. 30 cm (12 in)

Place a drain pan under the lower hose of the radiator.

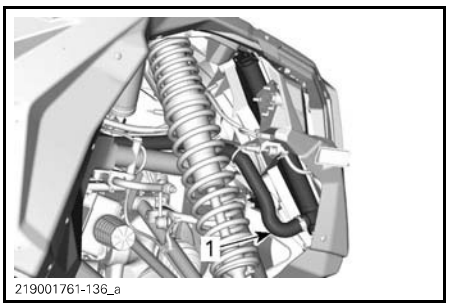

1. Lower hose

Install a large hose pincher on the lower hose of the radiator.

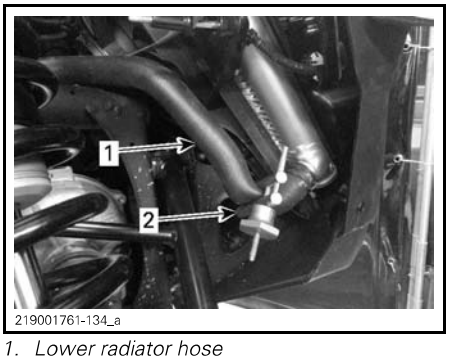

1. Lower radiator hose
2. Hose pincher

Slowly detach hose from radiator.

Remove coolant bottle pressure cap.

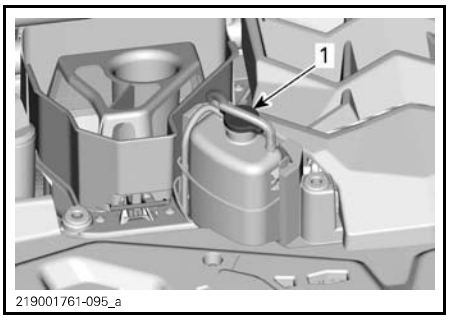

1. Pressure cap

Wait until the coolant flow stops or decreases.

Remove the hose pincher to drain the rest of the coolant.

Install radiator hose clamp.

TIGHTENING TORQUE	
Radiator hose clamp	2.5 N•m to 3.5 N•m (22 lbf•**in** to 31 lbf•**in**)

Fill cooling system with coolant, refer to *COOLING SYSTEM REFILLING AND BLEEDING* procedure.

Cooling System Refilling and Bleeding

1. Remove the pressure cap.

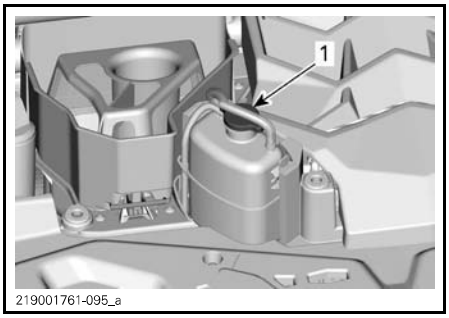

1. Pressure cap

2. Fill the cooling system until level reaches the MAX line on the coolant reservoir.



3. Install pressure cap.
4. Run engine at idle with the pressure cap on until the cooling fan cycles 2 times.
5. Depress throttle pedal two or three times.
6. Stop engine and let it cool down.

Add coolant if necessary.

⚠ WARNING

In order to avoid potential burns, do not remove the pressure cap if the engine is hot.

7. After the next ride following this procedure, check coolant level. Add coolant as required. Refer to *ENGINE COOLANT LEVEL VERIFICATION*.

Muffler Spark Arresters

Muffler Spark Arrester Cleaning

The mufflers must be periodically purged of accumulated carbon.

⚠ **CAUTION** Never perform this operation immediately after the engine has been running because exhaust system is very hot.

Remove retaining screws securing muffler cover in place and remove muffler cover.

Pull out spark arrester and remove carbon deposits using a brush.

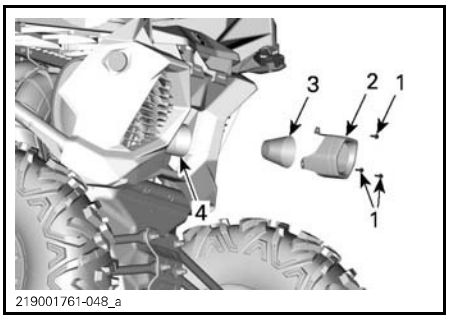

1. *Retaining screws*
2. *Muffler cover*
3. *Spark arrester*

NOTICE Use a soft brush and be careful to avoid damaging spark arrester mesh.

Inspect mesh of spark arrester for any damage. Replace as needed.

Inspect spark arrester chamber in muffler. Remove any debris as needed.

Reinstall the spark arrester in the reverse of the removal procedure. Tighten retaining screws to specification.

TIGHTENING TORQUE	
Muffler cover screws	10 N•m ± 2 N•m (89 lbf•**in** ± 18 lbf•**in**)

Gearbox Oil

Gearbox Oil Level Verification

Place the vehicle on a level surface. Select PARK position.

Check the gearbox oil level by removing the gearbox oil level plug located at the rear of vehicle, on the RH side.

NOTICE Pay attention not to loose the oil level plug O-ring.

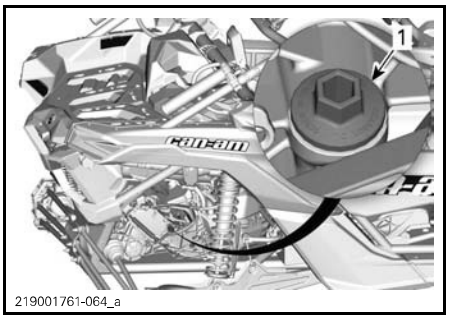

1. Gearbox oil level plug

Reinstall the plug, screw it in completely.

Remove plug again and check oil level on the dipstick. It should be near or equal to the upper mark.

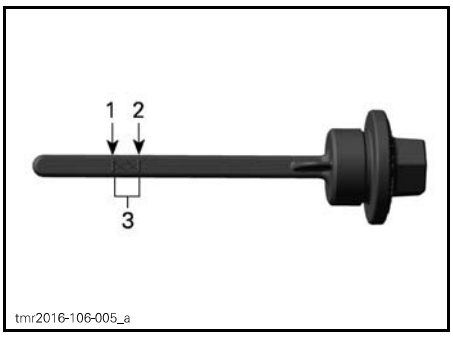

1. MIN.
2. MAX.
3. Operating range

To add oil, place a funnel into the oil level plug hole.

Add a small amount of recommended oil and recheck oil level.

Repeat the above procedures until oil level reaches the dipstick's upper mark.

NOTE: Do not overfill. Wipe off any spillage.

NOTICE Operating the gearbox with an improper oil level may severely damage gearbox.

Properly tighten the plug.

TIGHTENING TORQUE	
Gearbox oil level plug	5 N•m ± 0.6 N•m (44 lbf•**in** ± 5 lbf•**in**)

Recommended Gearbox Oil

Use the following gearbox oil.

RECOMMENDED GEARBOX OIL
XPS synthetic gear oil (P/N 293 600 140)

NOTE: The XPS oil is specially formulated to meet the lubrication requirements of this gearbox. BRP strongly recommends the use of its XPS oil. However, if the XPS synthetic gear oil is not available, use the following lubricant:

GEARBOX OIL REQUIREMENT
75W 140 API GL-5 synthetic gear oil

NOTICE Do not use another type of oil when servicing.

Gearbox Oil Change

Oil change should be done with a warm engine.

⚠ WARNING

The gearbox oil can be very hot.

Place the vehicle on a level surface.

Clean drain plug area.

Clean the oil level plug area.

Under the vehicle, place a drain pan underneath the magnetic drain plug area.

Remove the gearbox oil level plug (dipstick).

NOTICE Pay attention not to loose O-ring on plug.

Remove the magnetic gearbox drain plug and discard sealing ring.

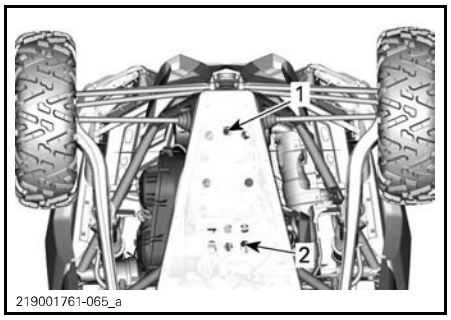

1. *Gearbox drain plug*
2. *Engine oil drain plug*

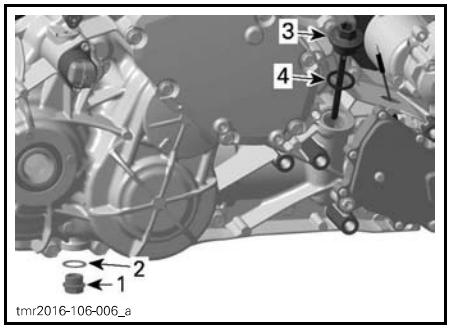

1. *Magnetic drain plug*
2. *Sealing ring (discard)*
3. *Gearbox oil level plug (dipstick)*
4. *O-ring*

Let oil completely drain from gearbox.

Install the drain plug.

NOTE: Clean drain plug from any metallic particles prior to installation.

Reinstall magnetic drain plug.

Always install a NEW sealing ring.

TIGHTENING TORQUE	
Magnetic drain plug	30 N•m ± 3 N•m (22 lbf•ft ± 2 lbf•ft)

Refill gearbox.

NOTICE **Use ONLY the recommended type of oil.**

Check oil level, refer to *GEARBOX OIL LEVEL VERIFICATION*.

Dispose gearbox oil as per your local environmental regulations.

Spark Plugs

Access to Spark Plugs

Remove the following parts and fasteners.

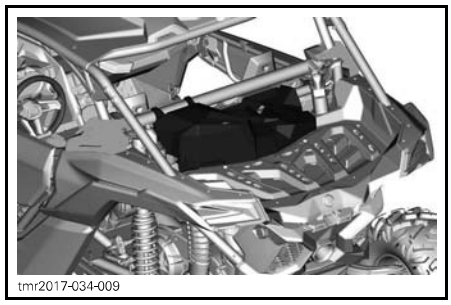

Remove rear service cover.

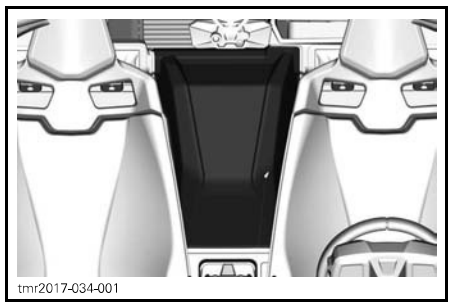

Remove intercooler screws.

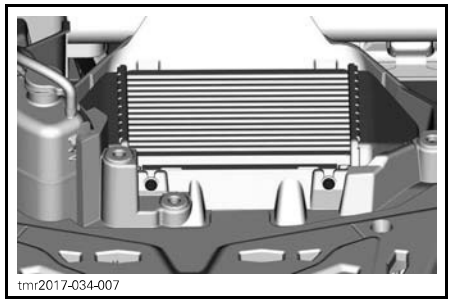

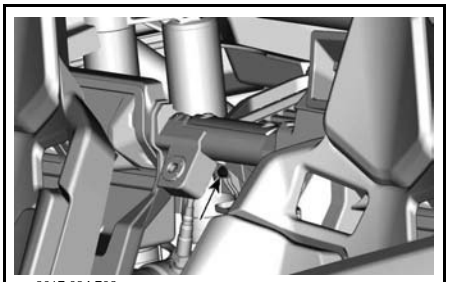
tmr2017-034-702_a

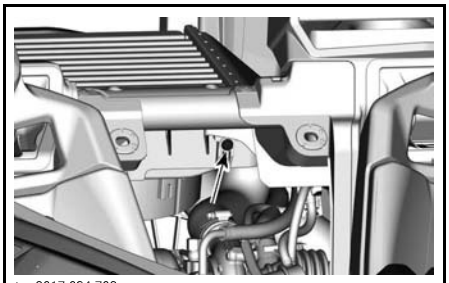
tmr2017-034-703_a

Disconnect intercooler hose

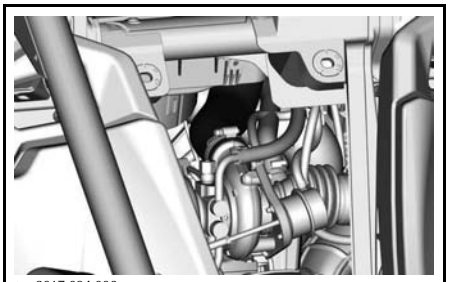
tmr2017-034-006

Lift intercooler assembly.

Disconnect the intercooler fan connector.

Move intercooler assembly aside

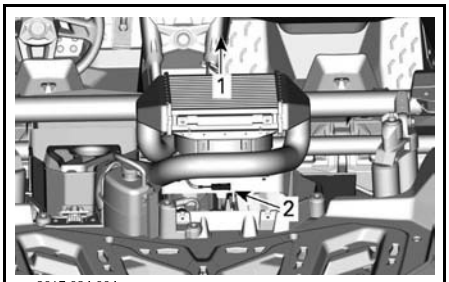

tmr2017-034-004_a

1. *Intercooler assembly*
2. *Intercooler fan connector*

Spark Plug Removal

1. Disconnect CAPS (camshaft position sensor).

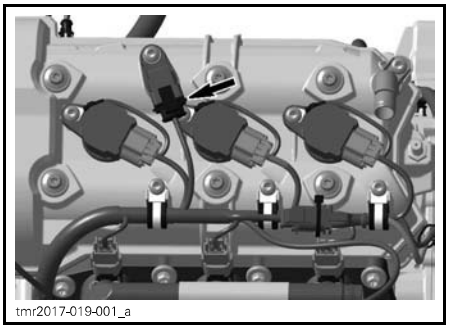
tmr2017-019-001_a

2. Remove:
   - Ignition coil retaining screws
   - Ground connector.
3. Disconnect ignition coil connectors.

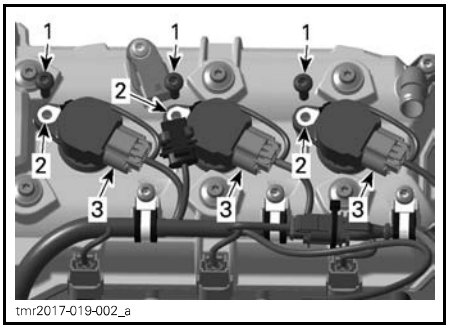

tmr2017-019-002_a

1. *Retaining screws*
2. *Ground connectors*
3. *Ignition coil connectors*

NOTICE Do not pry on ignition coil with a tool.

4. Remove ignition coils with gaskets from spark plug by rotating coil side to side as you pull up.
5. Clean spark plug and cylinder head with pressurized air.

⚠ CAUTION Always wear safety goggles when using pressurized air.

6. Unscrew the spark plugs completely.
7. Use ignition coil as a puller.

Spark Plug Installation

Prior to installation make sure that contact surface of cylinder head and spark plug is free of grime.

Using a feeler gauge, set the spark plug gap.

SPARK PLUG GAP
0.8 mm (.031 in)

Apply HEAT-SINK PASTE P12 (P/N 420 897 186) on the spark plug threads.

Screw spark plug into cylinder heads by hand and tighten to specification using a torque wrench.

⚠ CAUTION Do not overtighten spark plugs. engine damage can occur.

TIGHTENING TORQUE	
Spark plug	11 N•m (97 lbf•**in**)

Install the ignition coil on the spark plug.

Align the retaining screw hole of the ignition coil with the threaded hole on the valve cover.

Push the ignition coil all the way down until it rests on the valve cover.

Install and tighten retaining screw.

TIGHTENING TORQUE	
Ignition coil retaining screw	9 N•m ± 1 N•m (80 lbf•**in** ± 9 lbf•**in**)

Reinstall all other removed parts using the reverse of removal procedure.

NOTE: Make sure to reconnect the intercooler fan connector.

CVT Cover

NOTE: For a better understanding, some illustrations are taken with engine out of vehicle. To perform the following instructions, it is not necessary to remove engine.

This CVT is lubrication free.

⚠ WARNING

Never touch CVT while engine is running. Never drive vehicle when CVT cover is removed.

⚠ CAUTION Let engine cool down before removing the CVT cover.

Place the vehicle on a level surface. Select PARK position.

CVT Cover Access

CVT cover can be accessed from the LH side at the rear of vehicle.

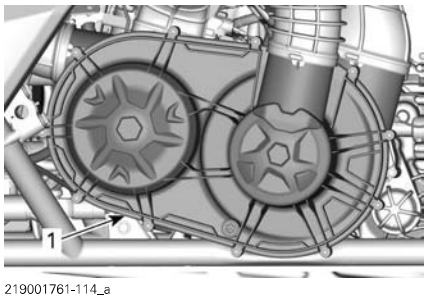

PARTS REMOVED FOR CLARITY
1. CVT cover

CVT Cover Removal

Loosen CVT inlet hose clamp(s).

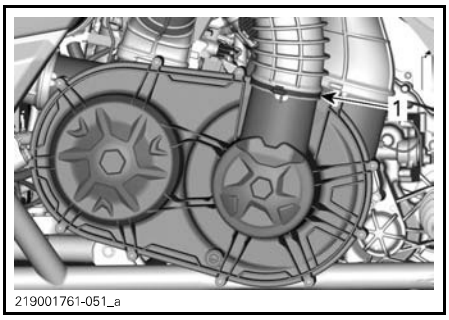

1. Clamp

Use wrench supplied in tool kit to remove the thirteen CVT cover screws.

Remove the center top screw last to support the cover during removal.

NOTICE **Do not use an impact tool to remove CVT cover screws.**

Remove the CVT cover and its gasket.

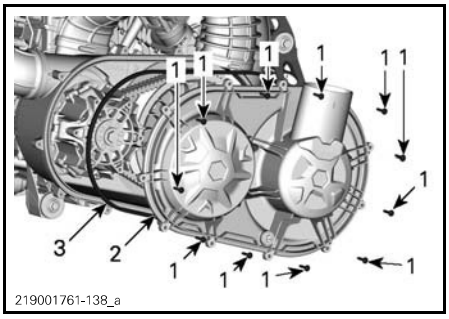

1. CVT cover screws
2. CVT cover
3. Gasket

Check inside front and rear CVT outlet hoses to make sure there are no debris.

CVT Cover Installation

Install the center top screw of first.

Tighten the CVT cover screws as per following sequence.

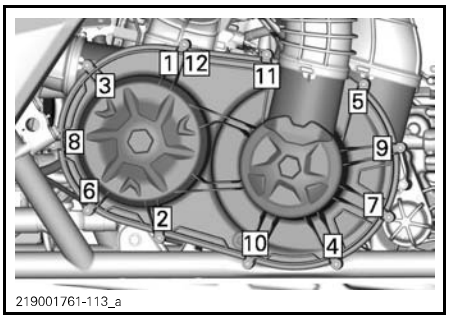

TIGHTENING TORQUE	
CVT Cover screws	7 N•m ± 0.8 N•m (62 lbf•**in** ± 7 lbf•**in**)

Drive Belt

Drive Belt Removal

NOTICE **In case of a drive belt failure, the CVT, cover and air outlet must be cleaned.**

Please refer to *TIPS FOR MAXIMIZING DRIVE BELT DURABILITY* for some IMPORTANT information.

Remove *CVT COVER*.

Open driven pulley.

REQUIRED TOOLS	
PULLER/LOCKING TOOL (P/N 529 000 088) (supplied in tool kit)	
DRIVEN PULLEY ADAPTER (P/N 708 200 720) (supplied in tool kit)	

Insert the pulley adaptor in the driven pulley threaded hole, then screw it in.

Insert the puller/locking tool in the pulley adaptor threaded hole, then screw it in to open the pulley.

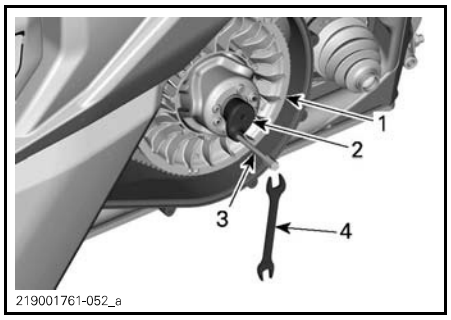

1. *Fixed sheave of driven pulley*
2. *Adaptor (in glove box)*
3. *Puller/locking tool (in tool kit)*
4. *Wrench (in tool kit)*

To remove belt, slip the belt over the top edge of fixed sheave, as shown.

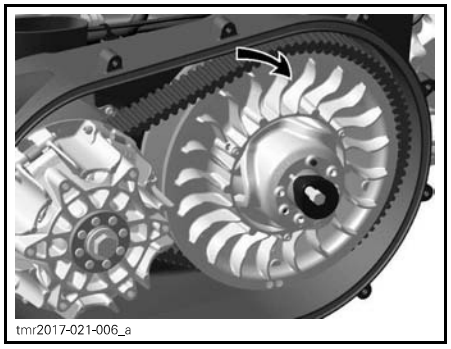

Drive Belt Installation

For installation, reverse the removal procedure. Pay attention to following details.

The maximum drive belt life span is obtained when the drive belt has the proper rotation direction. Install it so that the arrow printed on belt is pointing towards front of the vehicle, viewed from top.

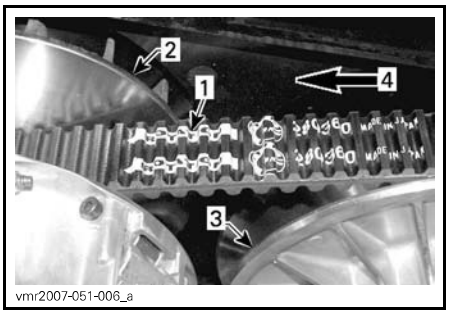

1. *Arrow printed on belt*
2. *Drive pulley (front)*
3. *Driven pulley (rear)*
4. *Rotation direction*

Turn the driven pulley until the lowest portion of the cogs on the external surface of drive belt is even with the driven pulley edge.

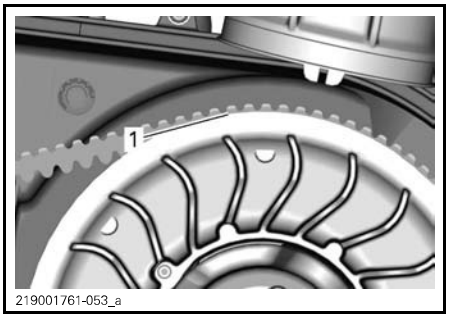

1. *Lowest portion of cogs even with external surface of drive belt*

Drive and Driven Pulleys

Drive and Driven Pulleys Inspection

This inspection must be performed by an authorized Can-Am dealer, repair shop, or person of your own choosing for maintenance, repair, or replacement.

Drive Pulley

Inspect the bushings of the sliding sheave of the drive pulley, replace worn parts.

Driven Pulley

Inspect the bushings of the cam and of the sliding sheave of the driven pulley, replace worn parts.

Battery

Battery Maintenance

NOTICE Never charge a battery while installed in vehicle.

These vehicles are equipped with a VRLA battery (Valve Regulated Lead Acid). It is a maintenance-free type battery, there is no need to add water to adjust electrolyte level.

NOTICE Never remove the battery sealing cap.

Battery Removal

Move the passenger seat completely forward, refer to *PASSENGER SEAT*.

Disconnect BLACK (-) cable first then RED (+) cable.

NOTICE Always respect this order for disassembly; disconnect BLACK (-) cable first.

Remove battery holder retaining screws.

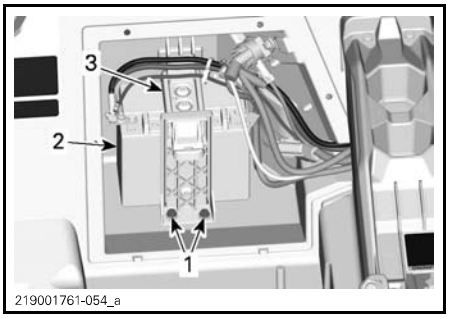

1. *Battery holder retaining screws*
2. *Battery*
3. *Battery holder*

Remove battery holder.

Remove battery.

Battery Cleaning

Clean battery, battery casing and battery posts using a solution of baking soda and water.

Remove corrosion from battery cable terminals and battery posts using a firm wire brush. Battery casing should be cleaned by soft brush and baking soda solution.

Battery Installation

Battery installation is the reverse of the removal procedure.

NOTICE Reversed battery polarity will damage the voltage regulator.

⚠ **CAUTION** Always connect RED (+) cable first then BLACK (-) cable.

Fuses

Fuse Replacement

If a fuse is burnt, replace it by one of the same rating.

NOTICE Do not use a higher rated fuse as this can cause severe damage.

Fuses and Fusible Links Location

Main Fuse Box

To access the main fuse box, remove the front service cover.

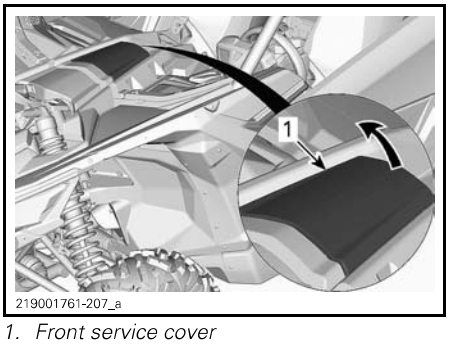

1. *Front service cover*

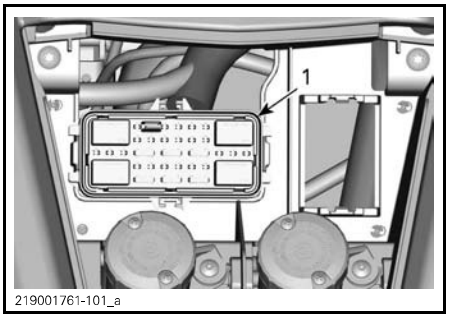

1. Main fuse box

Dynamic Power Steering (DPS) Fuse

The DPS fuse is located near the battery.

To access the DPS fuse, move the passenger seat completely forward, refer to *PASSENGER SEAT*.

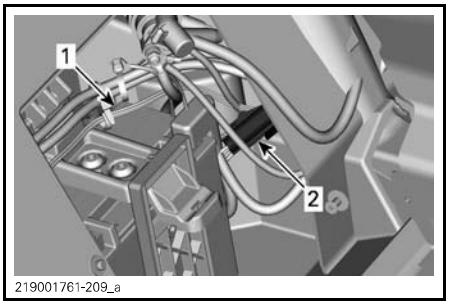

1. Battery
2. DPS fuse

Fusible Links

The fusible links are on the starter solenoid harness.

In the event that a fusible link blows, see a Can-Am SSV dealer, a repair shop or the person of your choosing.

Fuse Box Description

DPS FUSE HOLDER		
NO	DESCRIPTION	RATING
-	Dynamic power steering (DPS)	40 A

FUSIBLE LINKS		
NO	DESCRIPTION	RATING
1	Main	16 AWG
2	ACC	16 AWG

MAIN FUSE BOX		
NO	DESCRIPTION	RATING
F4	Gauge/relay	10 A
F5	Ignition/injectors	10 A
F6	Engine Control Module (ECM)	10 A
F7	2WD/4WD	10 A
F8	D.E.S.S. post	10 A
F9	Cooling fan	25 A
F11	Lights	10 A
F12	DC Outlet	20 A
F14	Accessories 2	30 A
F16	Tail lights	10 A
F17	Intercooler fan	20 A

NOTE: Fuses are identified inside fuse box cover.

Lights

Always check light operation after replacement.

The headlights and taillights are LEDs (Light Emitting Diode). This technology has proven itself on the reliability.

In the unlikely event they do not work, have them checked by an authorized Can-Am SSV dealer, repair shop or person of your choosing.

Drive Shaft Boot

Drive Shaft Boot Inspection

Visually inspect drive shaft boots conditions.

Check boots for cracks, tears, leaking grease, etc.

Repair or replace damaged parts as necessary.

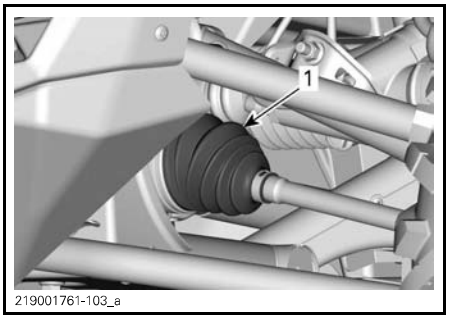

FRONT OF VEHICLE
1. Inner drive shaft boot

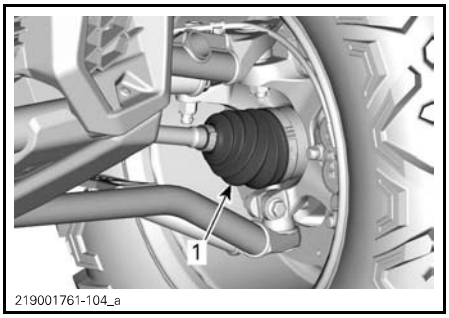

FRONT OF VEHICLE
1. Outer drive shaft boot

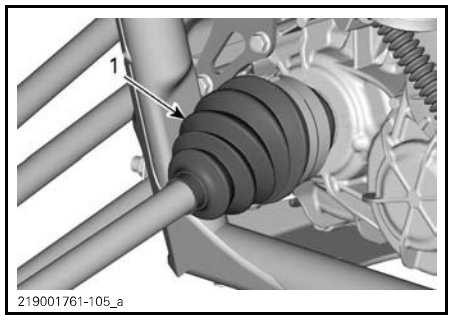

REAR OF VEHICLE (COMPONENTS REMOVED FOR CLARITY)
1. Inner drive shaft boot

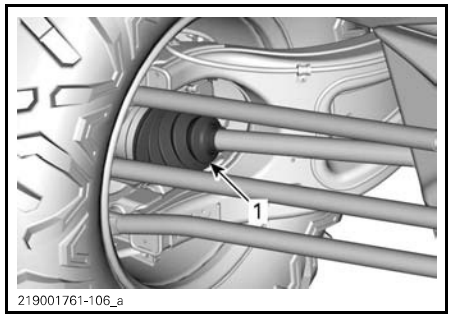

REAR OF VEHICLE
1. Outer drive shaft boot

Wheel Bearing

Wheel Bearing Inspection

Lift and support vehicle. Refer to *LIFTING AND SUPPORTING THE VEHICLE* in *VEHICLE INFORMATION SECTION*.

Push and pull the wheels from the upper edge to feel the play.

See an authorized Can-Am dealer, a repair shop or person of your choosing if there is abnormal play.

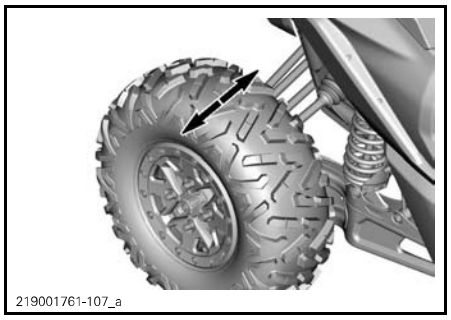

TYPICAL

Wheels and Tires

Wheel Removal

Loosen nuts then lift and support vehicle. Refer to *LIFTING AND SUPPORTING VEHICLE* in *VEHICLE INFORMATION*.

Remove nuts then remove wheel.

Wheel Installation

At installation, it is recommended to apply antiseize lubricant on the contact surface of the nut (taper) **only**.

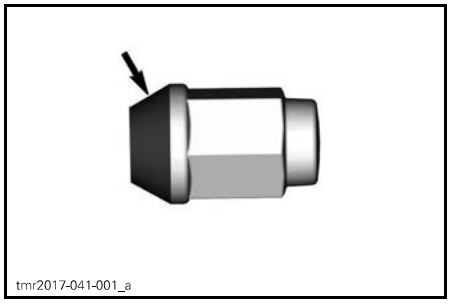

The tires are unidirectional and their rotation must be kept in a specific direction for proper operation.



TYPICAL
1. *Direction of rotation*

Tighten wheel lug nuts to the specified torque using the illustrated sequence.

TIGHTENING TORQUE	
Wheel lug nuts	120 N•m ± 10 N•m (89 lbf•ft ± 7 lbf•ft)

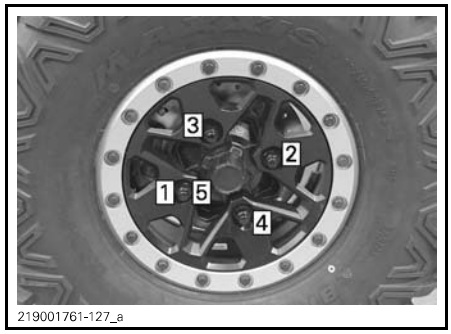

NOTICE Always use the recommended wheel nuts for the type of wheel. Using a different nut could cause damages to the rim or studs.

Tire Pressure

⚠ WARNING

Tire pressure greatly affects vehicle handling and stability. Insufficient pressure may cause tire to deflate and rotate on wheel. Overpressure may burst the tire. Always follow recommended pressure. NEVER set tire pressure below minimum. It could cause the tire to dislodge from the rim.

Check pressure when tires are **cold** before using the vehicle. Tire pressure changes with temperature and altitude. Recheck pressure if one of these conditions has changed.

Refer to *SPECIFICATIONS* or the label on your vehicle for applicable pressure.

For your convenience, a pressure gauge is supplied in tool kit.

NOTE: Although the tires are specifically designed for off-road use, a flat may still occur. Therefore, it is recommended to carry a tire pump and a repair kit.

Tire Inspection

Check tire for damage and wear. Replace if necessary.

⚠ WARNING

Do not rotate tires. The front and rear tires have a different size. The left and right tires have different unidirectional tread patterns.

Tire Replacement

Tires replacement should be performed by an authorized Can-Am dealer, repair shop or person of your own choosing.

⚠ WARNING

- **Replace tires only with the same type and size as original tires.**
- **For unidirectional tread pattern, ensure that the tires are installed in the correct direction of rotation.**
- **Tires should be replaced, by an experienced person, in accordance with tire industry standards and tools.**

Tire Mounting on Beadlock Wheels

1. Mount the tire on wheel.
   1.1 On the opposite side of beadlock, apply tire mounting lube on inner bead of tire and wheel to ensure proper seat when inflating. Mount the inner bead over the wheel.

   NOTICE **Mount tire from beadlock side only.**

   1.2 Seat tire outer bead in the shoulder of the beadlock inner ring and center the tire.

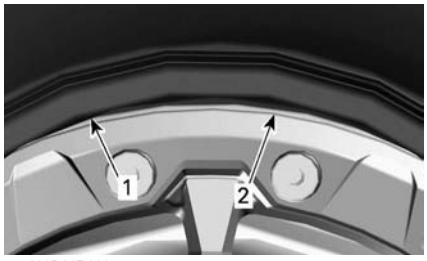

TYPICAL
1. *Tire outer bead*
2. *Beadlock inner ring shoulder*

2. Install all beadlock screws. To avoid cross threading, start all screws by hand.

NOTICE **Do not use an impact wrench for installing beadlock screws. The risk of screw breaking or screw stripping is high when using an impact wrench.**



1. Beadlock to be manually tightened

3. Tighten beadlock screws as per following specification and sequence.

NOTE: To ensure even pressure on the beadlock clamp ring, tighten screws **a few turns at a time.**

TIGHTENING TORQUE	
Beadlock screws (FIRST TORQUE)	14 N•m ± 1 N•m (124 lbf•**in** ± 9 lbf•**in**)

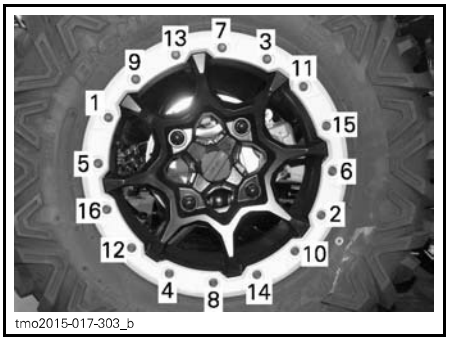

TYPICAL - TIGHTENING SEQUENCE

4. At this time check if the tire is still centered on wheel. Reposition it if necessary.
5. Tighten beadlock screws as per the **second** torque using the same sequence.

TIGHTENING TORQUE	
Beadlock screws (SECOND TORQUE)	25 N•m ± 1 N•m (18 lbf•ft ± 1 lbf•ft)

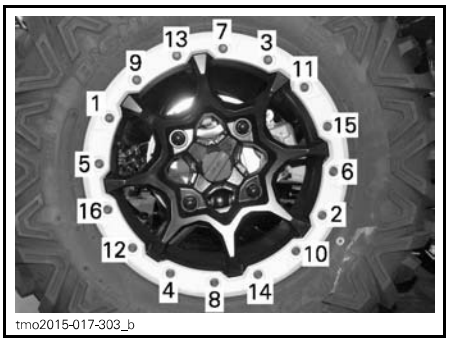

TYPICAL - TIGHTENING SEQUENCE

NOTE: The beadlock clamp ring should be in contact with the beadlock inner ring. The beadlock clamp ring can flex slightly to match the tire bead. IT IS NORMAL.

6. Verify the gap between tire and beadlock clamp ring, it should be practically equal all around the ring.

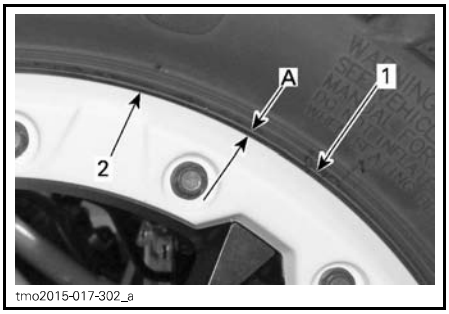

1. Tire
2. Beadlock clamp ring edge
A. Gap equal all around beadlock clamp ring

If the gap is not acceptable,

– Loosen all screws.

– Check tire position on wheel and reposition it if necessary.
– Restart the torquing sequence as detailed.

7. Torque beadlock screws a **final** time following the indicated sequence.

TIGHTENING TORQUE	
Beadlock screws (FINAL TORQUE)	25 N•m ± 1 N•m (18 lbf•ft ± 1 lbf•ft)

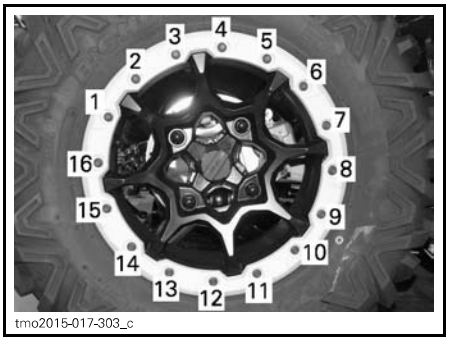

TYPICAL - FINAL TIGHTENING SEQUENCE

8. Inflate tire to seat the inner bead on wheel. Always use safe practices, such as a tire safety cage.

⚠ WARNING

Never exceed tire's recommended maximum pressure for seating beads.

Suspensions

Front Suspension Lubrication

Use SUSPENSION GREASE (P/N 293 550 033) or an equivalent.

Lubricate upper and lower suspension arms.

There are 2 grease fittings on each suspension arm.

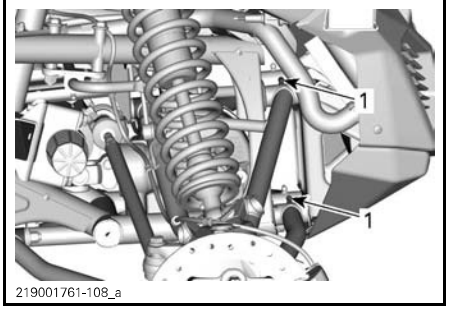

TYPICAL - FRONT SUSPENSION
1. Grease fittings

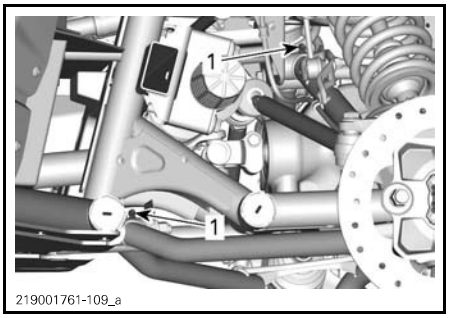

TYPICAL - FRONT SUSPENSION
1. Grease fittings

Stabilizer Bar Lubrication

Use SUSPENSION GREASE (P/N 293 550 033) or an equivalent.

There is one grease fitting on each front suspension side.

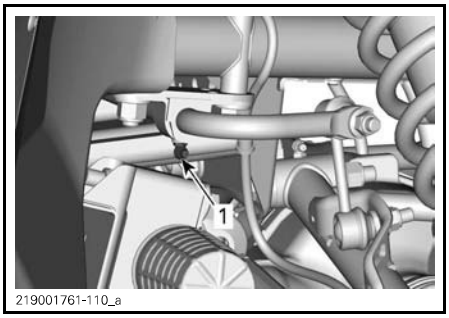

TYPICAL - FRONT STABILIZER BAR
1. Grease fitting

There is one grease fitting on each rear suspension side.

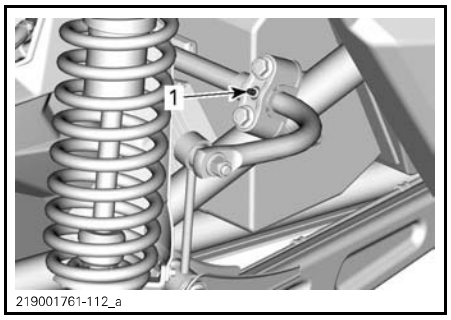

TYPICAL - REAR STABILIZER BAR
1. Grease fitting

Suspension Inspection

See an authorized Can-Am dealer, a repair shop or person of your choosing if any problem is detected.

Shock Absorbers

Inspect shock absorber for leaks, bump stop wear out or other damages. Verify fasteners are still well tightened.

Front suspension arms

Check suspension arms for cracks, bending or other damages.

Rear suspension arms

Check suspension arms, trailing and control links for cracks, bending or other damages.

Brakes

Brake Fluid Reservoir Level Verification

Remove the front service cover.

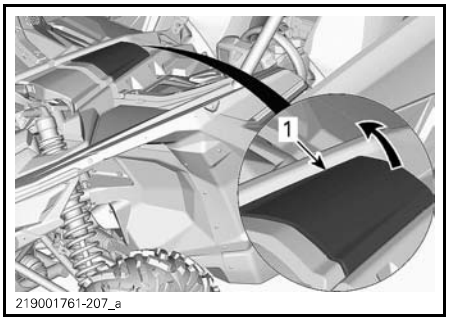

1. Front service cover

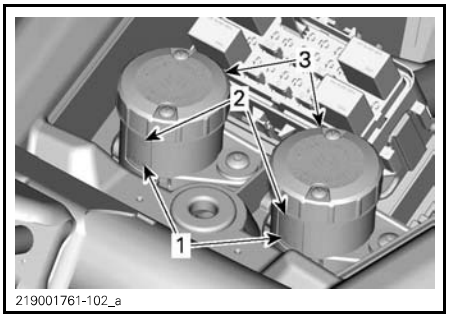

1. MIN
2. MAX

With vehicle on a level surface, check brake fluid in reservoirs for proper level. Brake fluid level should be between MIN and MAX. marks.

NOTE: A low level may indicate leaks or worn brake pads.

Adding Brake Fluid

Clean filler cap before removing.

Add fluid as required. **Do not overfill.**

NOTE: Ensure filler cap diaphragm is pushed inside the cap before closing the brake fluid reservoir.

Recommended Brake Fluid

Always use brake fluid meeting the specification DOT 4 only.

⚠ WARNING

To avoid serious damage to the braking system, do not use fluids other than the recommended one, nor mix different fluids for topping up.

Brake Inspection

⚠ WARNING

The brake fluid replacement or brake system maintenance and repairs should be performed by an authorized Can-Am dealer.

Verify the following between visits to your authorized Can-Am dealer:

- Brake fluid level
- Brake system for fluid leaks
- Brake pad wear
- Brake cleanliness.

Seat Belts

Seat Belt Cleaning

To clean dirt and debris from the seat belts, sponge the straps with mild soap and water. Do not use bleach, dye, or household detergents.

⚠ WARNING

Do not use pressure washer to clean seat belt components. Use of pressure washer can permanently damage seat belt components.

VEHICLE CARE

Post-Operation Care

When vehicle is used in salt-water environment rinsing the vehicle with fresh water is necessary to preserve vehicle and its components. Metallic parts lubrication is highly recommended. Use XPS LUBE (P/N 293 600 016) or an equivalent. This must be performed at the end of each operating day.

When vehicle is operated in muddy conditions, rinsing the vehicle is recommended to preserve vehicle and its components.

Vehicle Cleaning and Protection

Never use a high pressure washer to clean the vehicle. **USE LOW PRESSURE ONLY (like a garden hose).** High pressure can cause damage to electrical or mechanical components.

Pay attention to certain areas where mud or debris can accumulate and potentially cause wear, interferences or promote corrosion. The list includes but is not limited to:

- Around exhaust system and between mufflers and muffler covers
- Under and around the fuel tank
- Radiator
- Shock absorbers
- Around front and rear differentials
- Around and underneath engine and gearbox
- Inside wheels
- On top of skid plates.

Painted parts which are damaged should be properly repainted to prevent rust.

When required, wash the body with warm water and soap (only use mild detergent). Apply non-abrasive wax.

NOTICE **Never clean plastic parts with strong detergent, degreasing agent, paint thinner, acetone, etc.**

STORAGE AND PRESEASON PREPARATION

When a vehicle is not in use for more than 4 months, proper storage is a necessity.

When using your vehicle after storage, a preparation is required.

See an authorized Can-Am dealer, repair shop, or person of your own choosing to have your vehicle prepared for either storage or the preseason.

TECHNICAL INFORMATION

VEHICLE IDENTIFICATION

The main components of your vehicle (engine and frame) are identified by different serial numbers. It may sometimes become necessary to locate these numbers for warranty purposes or to trace your vehicle in the event of loss. These numbers are required by the authorized Can-Am dealer to complete warranty claims properly. We strongly recommend that you take note of all the serial numbers on your vehicle and supply them to your insurance company.

Vehicle Identification Number



TYPICAL — VEHICLE SERIAL NUMBER LABEL UNDER GLOVE BOX

Engine Identification Number

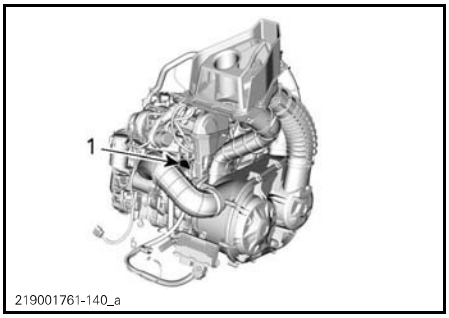

TYPICAL — ENGINE SERIAL NUMBER LABEL
1. EIN (Engine Identification Number)

Radio Frequency Digitally Encoded Security System (RF D.E.S.S. key)

This device complies with FCC Part 15 and Industry Canada license exempt RSS standard(s). Operation is subject to the following two conditions: (1) this device may not cause interference, and (2) this device must accept any interference, including interference that may cause undesired operation of the device.

Changes or modifications not expressly approved by the party responsible for compliance could void the user's authority to operate the equipment.

IC Registration Number: 12006A-M01456

FCC ID: 2ACERM01456

We, the party responsible for compliance, declare under our sole responsibility that the device is in conformity with the provisions of the following Council Directive: 2014/53/EU. To which this declaration relates is in conformity with the essential requirements and other relevant requirements. The product is in conformity with the following directives, harmonized standards and regulations: Radio Equipment Directive (RED) 2014/53/EU and Harmonized Standards: EN 300 330-2, EN 60950-1.

NOISE EMISSION CONTROL SYSTEM REGULATION

USA and Canada Only

Tampering with Noise Control System Is Prohibited!

U.S. Federal law and Canadian provincial laws may prohibit the following acts or the causing there of:

1. The removal or rendering inoperative by any person other than for purposes of maintenance, repair or replacement of any device or element of design incorporated into any new vehicle for the purpose of noise control prior to its sale or delivery to the ultimate purchaser or while it is in use or
2. The use of the vehicle after such device or element of design has been removed or rendered inoperative by any person.

Among those Acts Presumed to Constitute Tampering Are the Acts Listed Below:

1. Removal or alteration or the puncturing of the mufflers or any engine component which conducts removal of engine exhaust gases.
2. Removal or alteration or the puncturing of any part of the intake system.
3. Replacing any moving parts of the vehicle or parts of the exhaust or intake system, with parts other than those specified by the manufacturer.
4. Lack of proper maintenance.

The EC-Declaration of Conformity does not appear in this version of the Operator's Guide.

Please refer to the printed version that was delivered with your vehicle.

SPECIFICATIONS

MODEL		903
ENGINE		
Engine type		ROTAX® 903 Turbo R
		4-stroke, Dual Over Head Camshaft (DOHC), liquid cooled
Number of cylinders		3
Number of valves		12 valves (Adjustment free - hydraulic tappets)
Bore		74 mm (2.91 in)
Stroke		69.7 mm (2.74 in)
Displacement		899 cm^3 (54.86 in^3)
Exhaust system		Screen type approved by USDA Forest Service
Engine air filter		Synthetic paper
LUBRICATION SYSTEM		
Type		Dry sump. Replaceable oil filter
Oil filter		BRP Rotax® paper type, replaceable
Engine oil	Capacity (oil change with filter)	3.5 L (3.7 qt (U.S. liq.))
	Recommended	For the summer season, use XPS 4-STROKE SYNTH. BLEND OIL (P/N 293 600 121). For all seasons, use XPS 4-STROKE SYNTHETIC OIL (P/N 293 600 112). If not available, use a 5W 40 motor oil that meets the requirements for API service classification SJ, SL, SM or SN
Coolant	Type	Ethyl glycol/water mix (50% coolant, 50% water). Use the Long life antifreeze (P/N 219 702 685) or (P/N 619 590 204) (Finland, Norway and Sweden) or coolant specifically designed for aluminum engines
	Capacity	4.8 L (1.27 U.S. gal.)

MODEL		903
CVT TRANSMISSION		
Type		Quick Response System (QRS) CVT (Continuously Variable Transmission)
Engagement RPM		1800 RPM
GEARBOX		
Type		Dual range (HI-LO) with PARK, neutral and reverse
Gearbox oil	Capacity	400 ml (14 U.S. oz)
	Recommended	XPS synthetic gear oil (P/N 293 600 140) or a 75W 140 API GL-5
ELECTRICAL SYSTEM		
Magneto generator output		625 W @ 6000 RPM
Ignition system type		IDI (Inductive Discharge Ignition)
Ignition timing		Not adjustable
Spark plug	Quantity	3
	Make and type	NGK 97225 Laser iridium or equivalent (apply heat-sink paste P12 (P/N 420 897 186)
	Gap	0.8 mm (.031 in)
Engine RPM limiter setting		8300 RPM
Battery	Type	Dry battery type
	Voltage	12 volts
	Nominal rating	18 A•h
	Power starter output	1.34 kW
Headlights		2 x 20W LED
Signature lights		2 x 2W LED
Taillight		2 x 3W LED
Fuses		Refer to *FUSES*

MODEL		903
FUEL SYSTEM		
Fuel delivery	Type	Electronic fuel injection (EFI) with iTC
Throttle body		54 mm with ETA
Fuel pump	Type	Electric (in fuel tank)
Idle speed		1350 ± 50 RPM (ECO Mode) 1500 ± 50 RPM (SPORT Mode)
Fuel		Premium unleaded gasoline
		91 Pump Posted AKI (95 RON) - Refer to *FUEL REQUIREMENTS*
Fuel tank capacity		± 40 L (10.6 U.S. gal.)
Fuel remaining when low fuel light turns ON		± 12 L (3.2 U.S. gal.)
DRIVE SYSTEM		
Drive system type		Selectable 2WD/4WD
Front differential oil	Capacity	400 ml (13.5 U.S. oz)
	Type	XPS Synthetic gear oil (75W 90 API GL-5) (P/N 293 600 043) or synthetic oil 75W 90 API GL5
Front drive		Spiral gear Visco-lok† auto-locking front differential
Front drive ratio		3.6:1
Rear drive		Angle drive/spiral bevel gears
Rear drive ratio		3.43:1
CV joint grease		CV joint grease (P/N 293 550 062)
Propeller shaft grease		Propeller shaft grease (P/N 293 550 063)
STEERING		
Steering wheel		Adjustable tilt steering
Turning radius		528 cm (208 in)
Total toe front (vehicle on ground)		0.6° ± 0.4°
Total toe rear (vehicle on ground)		0° ± 0.2° Not adjustable

MODEL			903
FRONT SUSPENSION			
Suspension type			Double suspension arm with stabilizer bar
Preload adjustment type			Threaded
Suspension travel		Maverick X3 Maverick X3 X ds	508 mm (20 in)
		Maverick X3 X rs	559 mm (22 in)
Shock absorber	Qty		2
	Type	Maverick X3	HPG shocks with piggyback reservoir. QS3† compression and preload adjustments
		Maverick X3 X ds	HPG shocks with piggyback reservoir and dual speed compression and rebound adjustments
		Maverick X3 X rs	HPG shocks with piggyback reservoir and bypass, dual speed compression and rebound adjustments
REAR SUSPENSION			
Suspension type			Torsional Trailing suspension arm Independant (TTX) with external stabilizer bar
Preload adjustment type			Threaded
Suspension travel		Maverick X3 Maverick X3 X ds	508 mm (20 in)
		Maverick X3 X rs	609.6 mm (24 in)
Shock absorber	Qty		2
	Type	Maverick X3	HPG shocks with piggyback reservoir. QS3† compression and preload adjustments with bottom-out control
		Maverick X3 X ds	HPG shocks with piggyback reservoir and dual speed compression and rebound adjustments and bottom out control
		Maverick X3 X rs	HPG shocks with remote reservoir and dual speed compression and rebound adjustments

MODEL			903
BRAKES			
Front brake	Type		Dual 262 mm ventilated disc brakes with hydraulic twin-piston calipers (32 mm)
Rear brake	Type		Dual 248 mm ventilated disc brakes with hydraulic twin-piston calipers (28 mm)
Brake fluid	Capacity		310 ml (10.5 U.S. oz)
	Type		DOT 4
Caliper			Floating
Brake pad material	Front		Sintered high performance
	Rear		Sintered high performance
Minimum brake pad thickness			0.5 mm (.02 in)
Minimum brake disc thickness	Front		4 mm (.157 in)
	Rear		4 mm (.157 in)
Maximum brake disc warpage			0.2 mm (.01 in)
TIRES			
Pressure	Front	Maverick X3	Maximum: 159 kPa (23 PSI) Minimum: 152 kPa (22 PSI)
		Maverick X3 X ds	Maximum: 138 kPa (20 PSI) Minimum: 131 kPa (19 PSI)
		Maverick X3 X rs	Maximum: 124 kPa (18 PSI) Minimum: 117 kPa (17 PSI)
	Rear	Maverick X3	Maximum: 207 kPa (30 PSI) Minimum: 152 kPa (22 PSI)
		Maverick X3 X ds	Maximum: 186 kPa (27 PSI) Minimum: 138 kPa (20 PSI)
		Maverick X3 X rs	Maximum: 214 kPa (31 PSI) Minimum: 165 kPa (24 PSI)
Minimum tire thread depth			3 mm (.118 in)

MODEL			903
TIRES (cont'd)			
Tire size	Front	Maverick X3	28 x 9 x 14 (in)
		Maverick X3 X ds	29 x 9 x 14 (in)
		Maverick X3 X rs	30 x 10 x 14 (in)
	Rear	Maverick X3	28 x 11 x 14 (in)
		Maverick X3 X ds	29 x 11 x 14 (in)
		Maverick X3 X rs	30 x 10 x 14 (in)
WHEELS			
Type		Maverick X3	Cast aluminum wheels
		Maverick X3 X ds Maverick X3 X rs	Cast aluminum beadlock wheels
Rim size	Front		14 x 7 (in)
	Rear	Maverick X3 Maverick X3 X ds	14 x 8 (in)
		Maverick X3 X rs	14 x 7 (in)
Wheel nuts torque			120 N•m ± 10 N•m (89 lbf•ft ± 7 lbf•ft)
CHASSIS			
Cage type			47 mm (1.85 in) diameter, high strength steel, ROPS-approved cage
DIMENSIONS			
Overall length		Maverick X3 Maverick X3 X ds	332.7 cm (131 in)
		Maverick X3 X rs	335.3 cm (132 in)
Overall width		Maverick X3 Maverick X3 X ds	162.5 cm (64 in)
		Maverick X3 X rs	182.9 cm (72 in)
Overall height		Maverick X3 Maverick X3 X ds	167.6 cm (66 in)
		Maverick X3 X rs	170.2 cm (67 in)
Wheelbase			259.1 cm (102 in)

MODEL			903
DIMENSIONS (cont"d)			
Wheel track	Front	Maverick X3 Maverick X3 X ds	136 cm (53.5 in)
		Maverick X3 X rs	156.3 cm (61.5 in)
	Rear	Maverick X3 Maverick X3 X ds	133.1 cm (52.4 in)
		Maverick X3 X rs	153.4 cm (60.4 in)
Ground clearance		Maverick X3 Maverick X3 X ds	35.6 cm (14 in)
		Maverick X3 X rs	38.1 cm (15 in)
LOADING CAPACITY AND WEIGHT			
Dry weight		Maverick X3	666.9 kg (1,470 lb)
		Maverick X3 X ds	675.9 kg (1,490 lb)
		Maverick X3 X rs	718.9 kg (1,585 lb)
Weight distribution (front/rear)			45/55
Cargo rack capacity			90 kg (200 lb)
Total vehicle load allowed (including driver, passenger, all other loads and added accessories)			286 kg (630 lb)
Gross vehicle weight rating		Maverick X3	982 kg (2,165 lb)
		Maverick X3 X ds	991 kg (2,185 lb)
		Maverick X3 X rs	1 034 kg (2,280 lb)

This page is intentionally blank

TROUBLESHOOTING

TROUBLESHOOTING GUIDELINES

CVT BELT IS SLIPPING

1. Water has entered in the CVT.
   – *Refer to SPECIAL PROCEDURES subsection.*

"--" IS DISPLAYED ON TRANSMISSION POSITION DISPLAY

1. Shift lever is between 2 positions.
   – *Properly position the shift lever in the desired position.*
2. Shift lever is not properly adjusted.
   – *Contact an authorized Can-Am dealer.*
3. Electrical communication error.
   – *Contact an authorized Can-Am dealer.*

ENGINE DOES NOT TURN

1. D.E.S.S. key is not installed on D.E.S.S. post.
   – *Securely install key to D.E.S.S. post.*
2. Shift lever is not set on PARK or NEUTRAL.
   – *Set shift lever to either in PARK or in NEUTRAL or press the brake pedal.*
3. Burnt fuse.
   – *Check fuses.*
4. Weak battery or loose connections.
   – *Check charging system fuse.*
   – *Check fault message in cluster.*
   – *Check battery connections and terminals condition.*
   – *Have the battery checked by an authorized Can-Am dealer.*
5. Defective engine start button.
   – *Contact an authorized Can-Am dealer.*
6. Defective starter solenoid.
   – *Contact an authorized Can-Am dealer.*
7. D.E.S.S. key not recognized is displayed in the multifunction gauge.
   – *Clean D.E.S.S. key.*

ENGINE TURNS OVER BUT FAILS TO START

1. Flooded engine (spark plug wet when removed).
   – *(If the engine does not start and it is fuel-flooded, the drowned mode can be activated to prevent fuel injection and to cut ignition while cranking. Proceed as follows:*
   • Install key on D.E.S.S. post.
   • Press completely and HOLD accelerator pedal.
   • Press the engine START button.
   The engine should be cranked for 10 seconds. Release engine START button.
   Release accelerator pedal and start/crank engine again to allow starting.
   If it does not work:
   • Remove the spark plugs (tools are supplied in tool kit). Refer to SPARK PLUGS in the MAINTENANCE PROCEDURES section.
   • Crank engine several times.
   • Install new spark plugs if possible or clean and dry spark plugs.
   • If engine does not start, seek service from an authorized Can-Am dealer, repair shop, or person of your own choosing for maintenance, repair, or replacement. Please refer to the US EPA EMISSIONS-RELATED WARRANTY contained herein for information about warranty claims.

2. No fuel to the engine (spark plug dry when removed).
   – *Check fuel tank level.*
   – *Check fuel pump fuse.*
   – *Obstructed fuel pump pre-filter or fuel pump failure. Seek service from an authorized Can-Am dealer, repair shop, or person of your own choosing for maintenance, repair, or replacement. Please refer to the US EPA EMISSIONS-RELATED WARRANTY contained herein for information about warranty claims.*
3. Spark plug/ignition (no spark).
   – *Check ignition fuse.*
   – *Remove spark plug then reconnect to ignition coil.*
   – *Start engine with spark plug grounded to the engine away from spark plug hole. If no spark appears, replace spark plug.*
   – *If trouble persists, seek service from an authorized Can-Am dealer, repair shop, or person of your own choosing for maintenance, repair, or replacement. Please refer to the US EPA EMISSIONS-RELATED WARRANTY contained herein for information about warranty claims.*

ENGINE LACKS ACCELERATION OR POWER

1. Seat belt not buckled properly. Check cluster message.
   – *Buckle up seat belt.*
2. Fouled or damaged spark plug.
   – *Replace spark plugs.*
3. Engine air filter plugged or dirty.
   – *Check air filter and replace if necessary.*
   – *Check deposits in engine air filter housing.*

ENGINE LACKS ACCELERATION OR POWER (cont'd)

4. Water in CVT
   – *Drain water from CVT. Refer to SPECIAL PROCEDURES subsection.*
5. CVT dirty or worn-out.
   – *Contact an authorized Can-Am dealer.*
6. Lack of fuel
   – *Dirty or clogged fuel pump pre-filter. Seek service from an authorized Can-Am dealer, repair shop, or person of your own choosing for maintenance, repair, or replacement. Please refer to the US EPA EMISSIONS-RELATED WARRANTY contained herein for information about warranty claims.*
7. Engine is in limp home mode.
   – *Check multifunction gauge display for messages.*
   – *Multifunction gauge CHECK ENGINE indicator lamp is on and display shows LIMP HOME, seek service from an authorized Can-Am dealer, repair shop, or person of your own choosing for maintenance, repair, or replacement. Please refer to the US EPA EMISSIONS-RELATED WARRANTY contained herein for information about warranty claims.*

ENGINE OVERHEATS

1. Low coolant level in cooling system.
   – *Check coolant level and refill. See MAINTENANCE PROCEDURES. Seek service from an authorized Can-Am dealer, repair shop, or person of your own choosing for maintenance, repair, or replacement. Please refer to the US EPA EMISSIONS-RELATED WARRANTY contained herein for information about warranty claims.*
2. Cooling fan is not working.
   – *Ensure cooling fan is not jammed and working properly.*
   – *Check fan fuse. See FUSES in the MAINTENANCE PROCEDURES subsection.*
3. Dirty radiators fins.
   – *Check and clean radiator fins. See MAINTENANCE PROCEDURES subsection.*

ENGINE MISFIRE

1. Fouled/damaged/worn spark plug.
   – *Replace spark plugs as required.*
2. Water in fuel.
   – *Drain fuel system and refill with fresh fuel.*

THE RPM INCREASES BUT THE VEHICLE DOES NOT MOVE

1. Water in the CVT.
   – *Drain water from CVT. See SPECIAL PROCEDURES subsection.*
2. CVT dirty or worn-out or belt failure.
   – *Contact an authorized Can-Am dealer.*

PARTIAL OR NO RESPONSE FROM THE ACCELERATOR PEDAL INPUTS (CHECK ENGINE IS ON AND PPS FAULT MESSAGE IS DISPLAYED)

1. Partial failure of the accelerator pedal sensors (PPS).
   – *Use the override switch to retrieve accelerator pedal normal operation. Contact an authorized Can-Am dealer.*
2. Total failure of the accelerator pedal sensors (PPS).
   – *Use the override switch to bypass the accelerator pedal in order to move vehicle. Contact an authorized Can-Am dealer.*

MESSAGES IN MULTIFUNCTION GAUGE

If an abnormal engine condition occurs, the following messages can be combined with a pilot lamp.

MESSAGE	DESCRIPTION
D.E.S.S. KEY NOT RECOGNIZED	D.E.S.S. key requires cleaning.
BAD KEY	Indicates that you have used the wrong ignition key or D.E.S.S. key, use the proper key for this vehicle.
CHECK ENGINE	All active or previously activated faults that require attention. No engine limitation engaged.
LIMP HOME	Critical faults requiring diagnostic as soon as possible. An engine limitation is engaged and/or the engine behavior is modified.
ECM CRC ERROR	Error message from ECM.
TPS FAULT	Throttle body fault, generally followed by a Limp Home message.
BRAKE SWITCH FAULT	Brake signal fault.
ECM NOT RECOGNIZED	Message displayed when the gauge is unable to identify the ECM.
CHECK DPS	Check engine pilot light on. Indicates that the DPS (Dynamic Power Steering) does not work properly. See an authorized Can-Am dealer.
PPS FAULT	When one or both sensor of the PPS is/are faulty, erratic or out of range or that the ratio between the two is incorrect, the message will be displayed and the check engine will be lit.
MANUAL LIMP HOME	When the PPS Limp Home is engaged, the message will be displayed.
FUEL SENDER RANGE PERFORMANCE	When the fuel sender resistor value is out of range the multifunction gauge (analog/digital) will detect it and display the message.

WARRANTY

BRP LIMITED WARRANTY USA AND CANADA: 2017 CAN-AM® SSV

1) SCOPE OF THE LIMITED WARRANTY

Bombardier Recreational Products Inc. ("BRP")* warrants its 2017 Can-Am side-by-side vehicles ("SSV") sold by authorized Can-Am SSV dealers (as hereinafter defined) in the United States of America ("USA") and in Canada from defects in material or workmanship for the period and under the conditions described below. This limited warranty will become null and void if: (1) the SSV was used for racing or any other competitive activity, at any point, even by a previous owner; or (2) the SSV has been altered or modified in such a way so as to adversely affect its operation, performance or durability, or has been altered or modified to change its intended use.

Non-factory installed parts and accessories are not covered under this limited warranty. Please refer to the applicable parts and accessories limited warranty text.

2) LIMITATIONS OF LIABILITY

THIS WARRANTY IS EXPRESSLY GIVEN AND ACCEPTED IN LIEU OF ANY AND ALL OTHER WARRANTIES, EXPRESSED OR IMPLIED, INCLUDING WITHOUT LIMITATION ANY WARRANTY OF MERCHANTABILITY OR FITNESS FOR A PARTICULAR PURPOSE. TO THE EXTENT THAT THEY CANNOT BE DISCLAIMED, THE IMPLIED WARRANTIES ARE LIMITED IN DURATION TO THE LIFE OF THE EXPRESS WARRANTY. INCIDENTAL AND CONSEQUENTIAL DAMAGES ARE EXCLUDED FROM COVERAGE UNDER THIS WARRANTY. SOME STATES/ PROVINCES DO NOT ALLOW FOR THE DISCLAIMERS, LIMITATIONS AND EXCLUSIONS IDENTIFIED ABOVE, AS A RESULT, THEY MAY NOT APPLY TO YOU. THIS WARRANTY GIVES YOU SPECIFIC RIGHTS, AND YOU MAY ALSO HAVE OTHER LEGAL RIGHTS WHICH MAY VARY FROM STATE TO STATE, OR PROVINCE TO PROVINCE.

Neither the distributor, any BRP dealer nor any other person has been authorized to make any affirmation, representation or warranty regarding the product, other than those contained in this limited warranty, and if made, shall not be enforceable against BRP. BRP reserves the right to modify this limited warranty at any time, being understood that such modification will not alter the warranty conditions applicable to the products sold while this warranty is in effect.

3) EXCLUSIONS – ARE NOT WARRANTED

The following are not warranted under any circumstances:

- Normal wear and tear;
- Routine maintenance items, tune ups, adjustments;
- Damage caused by failure to provide proper maintenance and/or storage, as described in the Operator's Guide;
- Damage resulting from removal of parts, improper repairs, service, maintenance, modifications or use of parts not manufactured or approved by BRP or resulting from repairs done by a person that is not an authorized servicing Can-Am SSV dealer;
- Damage caused by abuse, abnormal use, neglect or operation of the product in a manner inconsistent with the recommended operation described in the Can-Am SSV Operator's Guide;

– Damage resulting from accident, submersion, fire, theft, vandalism or any act of God;
– Operation with fuels, oils or lubricants which are not suitable for use with the product (see the Operator's Guide);
– Damages from rust, corrosion or exposure to the elements;
– Damage resulting from water or snow ingestion;
– Incidental or consequential damages, or damages of any kind including without limitation towing, storage, telephone, rental, taxi, inconvenience, insurance coverage, loan payments, loss of time, loss of income.

4) WARRANTY COVERAGE PERIOD

This limited warranty will be in effect from (1) the date of delivery to the first retail consumer or (2) the date the product is first put into use, whichever occurs first and for the following period:

– SIX (6) CONSECUTIVE MONTHS, for private use or commercial use owners. For emission-related components; please also refer to the US EPA Emission-related warranty contained herein.

The repair or replacement of parts or the performance of service under this warranty does not extend the life of this warranty beyond its original expiration date.

5) CONDITIONS TO HAVE WARRANTY COVERAGE

This warranty coverage is available **only** if **each** of the following conditions has been fulfilled:

– The 2017 Can-Am SSV must be purchased as new and unused by its first owner from a Can-Am SSV dealer authorized to distribute Can-Am SSV's in the country in which the sale occurred ("Can-Am SSV dealer");
– The BRP specified pre-delivery inspection process must be completed and documented and signed by the purchaser;
– The 2017 Can-Am SSV must have undergone proper registration by an authorized Can-Am SSV dealer;
– The 2017 Can-Am SSV must be purchased in the country in which the purchaser resides;
– Routine maintenance outlined in the Operator's Guide must be timely performed in order to maintain warranty coverage. BRP reserves the right to make warranty coverage contingent upon proof of proper maintenance.

BRP will not honor this limited warranty to any private use owner or commercial use owner if one of the preceding conditions has not been met. Such limitations are necessary in order to allow BRP to preserve both the safety of its products, and also that of its consumers and the general public.

6) WHAT TO DO TO OBTAIN WARRANTY COVERAGE

The customer must cease using the SSV upon the appearance of an anomaly. The customer must notify a servicing BRP dealer within three (3) days of the appearance of a defect, and provide it with reasonable access to the product and reasonable opportunity to repair it. The customer must also present to the authorized BRP dealer, proof of purchase of the product and must sign the repair/work order prior to starting the repair in order to validate the warranty repair. All parts replaced under this limited warranty become the property of BRP.

7) WHAT BRP WILL DO

BRP's obligations under this warranty are limited to, at its sole discretion, repairing parts found defective under normal use, maintenance and service, or replacing such parts with new genuine Can-Am SSV parts without charge for parts and labor, at any authorized BRP dealer during the warranty coverage period under the conditions described herein. BRP's responsibility is limited to making the required repairs or replacements of parts. No claim of breach of warranty shall be cause for cancellation or rescission of the sale of the SSV to the owner.

In the event that service is required outside of the country of original sale, the owner will bear responsibility for any additional charges due to local practices and conditions, such as, but not limited to, freight, insurance, taxes, license fees, import duties, and any and all other financial charges, including those levied by governments, states, territories and their respective agencies.

BRP reserves the right to improve or modify products from time to time without assuming any obligation to modify products previously manufactured.

8) ADDITIONAL SUPPLIER WARRANTIES

A GPS receiver may be supplied by BRP as standard equipment on certain 2017 Can-Am SSV. The GPS receiver is covered under BRP's limited warranty policy. Additional warranty coverage if offered by the GPS receiver "supplier" that is longer than BRP's limited warranty is to be dealt by the dealer or consumer directly with the GPS receiver "supplier".

9) TRANSFER

If the ownership of a product is transferred during the warranty coverage period, this limited warranty, subject to its terms and conditions, shall also be transferred and be valid for the remaining coverage period provided BRP or an authorized Can-Am SSV Distributor/Dealer receives a proof that the former owner agreed to the transfer of ownership, in addition to the co-ordinates of the new owner.

10) CONSUMER ASSISTANCE

In the event of a controversy or a dispute in connection with this limited warranty, BRP suggests that you try to resolve the issue at the dealership level. We recommend discussing the issue with the authorized dealer's service manager or owner.

If the matter still remains unresolved, contact BRP by filling out the customer contact form at www.brp.com or contact BRP by mail at one of the addresses listed under the *CONTACT US* section of this guide.

* In the USA, products are distributed and serviced by BRP US Inc.
© 2016 Bombardier Recreational Products Inc. All rights reserved.
® Trademark of Bombardier Recreational Products Inc. or its affiliates.

US EPA EMISSION-RELATED WARRANTY

Bombardier Recreational Products Inc. ("BRP")* warrants to the ultimate purchaser and each subsequent purchaser that this new engine, including all parts of its exhaust emission control system and its evaporative emission control system, meets two conditions:

1. It is designed, built, and equipped so it conforms at the time of sale to the ultimate purchaser with the requirements of 40 CFR 1051 and 40 CFR 1060.
2. It is free from defects in materials and workmanship that may keep it from meeting the requirements of 40 CFR 1051 and 40 CFR 1060.

Where a warrantable condition exists, BRP will repair or replace, as it elects, any part or component with a defect in materials or workmanship that would increase the engine's emissions of any regulated pollutant within the stated warranty period at no cost to the owner, including expenses related to diagnosing and repairing or replacing emission-related parts. All defective parts replaced under this warranty become the property of BRP.

For all emission-related warranty claims, BRP is limiting the diagnosis and repair of emission-related parts to the authorized Can-Am dealers, unless for emergency repairs as required by item 2 of the following list.

As a certifying manufacturer, BRP will not deny emission-related warranty claims based on any of the following:

1. Maintenance or other service BRP or BRP's authorized facilities performed.
2. Engine/equipment repair work that an operator performed to correct an unsafe, emergency condition attributable to BRP as long as the operator tries to restore the engine/equipment to its proper configuration as soon as possible.
3. Any action or inaction by the operator unrelated to the warranty claim.
4. Maintenance that was performed more frequently than BRP specify.
5. Anything that is BRP fault or responsibility.
6. The use of any fuel that is commonly available where the equipment operates unless BRP written maintenance instructions state that this fuel would harm the equipment's emission control system and operators can readily find the proper fuel. See maintenance information section and fuel requirements of fueling section.

Emission-Related Warranty Period

The emission-related warranty is valid for the following period whichever comes first:

	HOURS	MONTHS	KILOMETERS
Exhaust emission-related components	500	30	5000
Evaporative emission-related components	N/A	24	N/A

Components Covered

The emission-related warranty covers all components whose failure would increase an engine's emissions of any regulated pollutant, including the following listed components:

1. For exhaust emissions, emission-related components include any engine parts related to the following systems:
   - Air-induction system
   - Fuel system
   - Ignition system
   - Exhaust gas recirculation systems
2. The following parts are also considered emission-related components for exhaust emissions:
   - Aftertreatment devices
   - Crankcase ventilation valves
   - Sensors
   - Electronic control units
3. The following parts are considered emission-related components for evaporative emissions:
   - Fuel tank
   - Fuel cap
   - Fuel line
   - Fuel line fittings
   - Clamps*
   - Pressure relief valves*
   - Control valves*
   - Control solenoids*
   - Electronic controls*
   - Vacuum control diaphragms*
   - Control cables*
   - Control linkages*
   - Purge valves
   - Vapor hoses
   - Liquid/vapor separator
   - Carbon canister
   - Canister mounting brackets
   - Carburetor purge port connector
4. Emission-related components also include any other part whose only purpose is to reduce emissions or whose failure will increase emissions without significantly degrading engine/equipment performance.

*As related to the evaporative emission control system

Limited Applicability

As a certifying manufacturer, BRP may deny emission-related warranty claims for failures that have been caused by the owner's or operator's improper maintenance or use, by accidents for which the manufacturer has no responsibility, or by acts of God. For example, an emission-related warranty claim need not be honored for failures that have been directly caused by the operator's abuse of the engine/equipment or the operator's use of the engine/equipment in a manner for which it was not designed and are not attributable to the manufacturer in any way.

* In the USA, products are distributed and serviced by BRP US Inc.

BRP INTERNATIONAL LIMITED WARRANTY: 2017 CAN-AM® SSV

1) SCOPE OF THE LIMITED WARRANTY

Bombardier Recreational Products Inc. ("BRP")* warrants its 2017 Can-Am SSV sold by Can-Am SSV distributors or dealers authorized by BRP to distribute Can-Am SSVs ("Can-Am SSV Distributor/Dealer") outside of the fifty United States, Canada, member states of the European Economic Area (which is comprised of the states of the European Union plus Norway, Iceland and Liechtenstein) ("EEA"), member states of the Commonwealth of the Independent States (including Ukraine and Turkmenistan) ("CIS") and Turkey, from defects in material or workmanship for the period and under the conditions described below.

Non-factory installed parts and accessories are not covered under this limited warranty. Please refer to the applicable parts and accessories limited warranty text.

This limited warranty will become null and void if: (1) The SSV was used for racing or any other competitive activity, at any point, even by a previous owner; or (2) the SSV has been altered or modified in such a way so as to adversely affect its operation, performance or durability, or has been altered or modified to change its intended use.

2) LIMITATIONS OF LIABILITY

TO THE EXTENT PERMITTED BY LAW, THIS WARRANTY IS EXPRESSLY GIVEN AND ACCEPTED IN LIEU OF ANY AND ALL OTHER WARRANTIES, EXPRESSED OR IMPLIED, INCLUDING WITHOUT LIMITATION ANY WARRANTY OF MERCHANTABILITY OR FITNESS FOR A PARTICULAR PURPOSE. TO THE EXTENT THAT THEY CANNOT BE DISCLAIMED, THE IMPLIED WARRANTIES ARE LIMITED IN DURATION TO THE LIFE OF THE EXPRESS WARRANTY. INCIDENTAL AND CONSEQUENTIAL DAMAGES ARE EXCLUDED FROM COVERAGE UNDER THIS WARRANTY. SOME JURISDICTIONS DO NOT ALLOW FOR THE DISCLAIMERS, LIMITATIONS AND EXCLUSIONS IDENTIFIED ABOVE, AS A RESULT, THEY MAY NOT APPLY TO YOU. THIS WARRANTY GIVES YOU SPECIFIC RIGHTS, AND YOU MAY ALSO HAVE OTHER LEGAL RIGHTS WHICH MAY VARY FROM COUNTRY TO COUNTRY. (FOR PRODUCTS PURCHASED IN AUSTRALIA SEE CLAUSE 4 BELOW).

Neither the Can-Am SSV Distributor/Dealer nor any other person has been authorized to make any affirmation, representation or warranty regarding the product, other than those contained in this limited warranty, and if made, shall not be enforceable against BRP.

BRP reserves the right to modify this warranty at any time, being understood that such modification will not alter the warranty conditions applicable to the products sold while this warranty is in effect.

3) EXCLUSIONS ARE NOT WARRANTED

The following are not warranted under this limited warranty under any circumstances:

- Normal wear and tear;
- Routine maintenance items, tune ups, adjustments (parts and labor);
- Damage caused by negligence or failure to provide proper maintenance and/or storage, as described in the Operator's Guide;

– Damage resulting from removal of parts, improper repairs, service, maintenance, modifications or use of parts not manufactured or approved by BRP or resulting from repairs done by a person that is not an authorized servicing Can-Am SSV Distributor/Dealer;
– Damage caused by abuse, abnormal use, neglect or operation of the product in a manner inconsistent with the recommended operation described in the Operator's Guide;
– Damage resulting from accident, submersion, fire, theft, vandalism or any act of God;
– Operation with fuels, oils or lubricants which are not suitable for use with the product (see the Operator's Guide);
– Damage resulting from rust, corrosion or exposure to the elements;
– Damage resulting from water or snow ingestion;
– Incidental or consequential damages, or damages of any kind including without limitation towing, transportation expenses, storage, telephone, rental, taxi, inconvenience, insurance coverage, loan payments, loss of time, loss of income or time missed for downtime experience due to service work.

4) WARRANTY COVERAGE PERIOD

This warranty will be in effect from (1) the date of delivery to the first retail consumer or (2) the date the product is first put into use, whichever occurs first and for a period of:

– SIX (6) CONSECUTIVE MONTHS for private use or commercial use.

The repair or replacement of parts or the performance of service under this warranty does not extend the life of this warranty beyond its original expiration date.

FOR PRODUCTS SOLD IN AUSTRALIA ONLY

Nothing in these Warranty terms and conditions should be taken to exclude, restrict or modify the application of any condition, warranty, guarantee, right or remedy conferred or implied under the Competition and Consumer Act 2010 (Cth), including the Australian Consumer Law or any other law, where to do so would contravene that law, or cause any part of these terms and conditions to be void. The benefits given to you under this limited warranty hereto are in addition to other rights and remedies that you have under Australian law.

Our goods come with guarantees that cannot be excluded under the Australian Consumer Law. You are entitled to a replacement or refund for a major failure and for compensation for any other reasonably foreseeable loss or damage. You are also entitled to have the goods repaired or replaced if the goods fail to be of acceptable quality and the failure does not amount to a major failure.

5) CONDITIONS TO HAVE WARRANTY COVERAGE

This warranty coverage is available **only** if **each** of the following conditions has been fulfilled:

– The 2017 Can-Am SSV must be purchased as new and unused by its first owner from a Can-Am SSV Distributor/Dealer authorized to distribute Can-Am SSVs in the country in which the sale occurred;
– The BRP specified pre-delivery inspection process must be completed and documented;

– The product must have undergone proper registration by an authorized Can-Am SSV Distributor/Dealer;
– The 2017 Can-Am SSV must be purchased in the country or union of countries in which the purchaser resides; and
– Routine maintenance outlined in the Operator's Guide must be timely performed in order to maintain warranty coverage. BRP reserves the right to make warranty coverage contingent upon proof of proper maintenance.

BRP will not honor this limited warranty to any private use owner or commercial use owner if one of the preceding conditions has not been met. Such limitations are necessary in order to allow BRP to preserve both the safety of its products, and also that of its consumers and the general public.

6) WHAT TO DO TO OBTAIN WARRANTY COVERAGE

The customer must cease using the SSV upon the appearance of an anomaly. The customer must notify a servicing Can-Am SSV Distributor/Dealer within two (2) days of the appearance of a defect, and provide it with reasonable access to the product and reasonable opportunity to repair it. The customer must also present to the authorized Can-Am SSV Distributor/Dealer proof of purchase of the product and must sign the repair/work order prior to starting the repair in order to validate the warranty repair. All parts replaced under this limited warranty become the property of BRP.

Note that the notification period is subject to the applicable national or local legislation in customer's country.

7) WHAT BRP WILL DO

To the extent permitted by law, BRP's obligations under this warranty are limited to, at its sole discretion, repairing parts found defective under normal use, maintenance and service; or replacing such parts with new genuine Can-Am SSV parts without charge for parts and labour, at any authorized Can-Am SSV Distributor/Dealer during the warranty coverage period under the conditions described herein. BRP's responsibility is limited to making the required repairs or replacements of parts. No claim of breach of warranty shall be cause for cancellation or rescission of the sale of the Can-Am SSV to the owner. You may have other legal rights which may vary from country to country.

In the event that service is required outside of the country of original sale, the owner will bear responsibility for any additional charges due to local practices and conditions, such as, but not limited to, freight, insurance, taxes, license fees, import duties, and any and all other financial charges, including those levied by governments, states, territories and their respective agencies.

BRP reserves the right to improve or modify products from time to time without assuming any obligation to modify products previously manufactured.

8) TRANSFER

If the ownership of a product is transferred during the warranty coverage period, this limited warranty, subject to its terms and conditions, shall also be transferred and be valid for the remaining coverage period provided BRP or an authorized Can-Am SSV Distributor/Dealer receives a proof that the former owner agreed to the transfer of ownership, in addition to the coordinates of the new owner.

9) CONSUMER ASSISTANCE

In the event of a controversy or a dispute in connection with this limited warranty, BRP suggests that you try to resolve the issue at the Can-Am SSV Distributor/Dealer level. We recommend discussing the issue with the authorized Can-Am SSV Distributor/Dealer's service manager or owner.

If the matter still remains unresolved, contact BRP by filling out the customer contact form at www.brp.com or contact BRP by mail at one of the addresses listed under the *CONTACT US* section of this guide.

* For the territory covered by this limited warranty, products are distributed and serviced by Bombardier Recreational Products Inc. or its affiliates.

© 2016 Bombardier Recreational Products Inc. All rights reserved.
® Trademark of Bombardier Recreational Products Inc. or its affiliates.

BRP LIMITED WARRANTY FOR THE EUROPEAN ECONOMIC AREA, THE COMMONWEALTH OF THE INDEPENDANT STATES AND TURKEY: 2017 CAN-AM® SSV

1) SCOPE OF THE LIMITED WARRANTY

Bombardier Recreational Products Inc. ("BRP")* warrants its 2017 Can-Am SSVs sold by Can-Am SSV distributors or dealers authorized by BRP to distribute Can-Am SSVs ("Can-Am SSV Distributor/Dealer").in member states of the European Economic Area (which is comprised of the member states of the European Union plus Norway, Iceland and Liechtenstein) ("EEA"), in member states of the Commonwealth of the Independent States (including Ukraine and Turkmenistan) ("CIS") and Turkey from defects in material or workmanship for the period and under the conditions described below.

Non-factory installed parts and accessories are not covered under this limited warranty. Please refer to the applicable parts and accessories limited warranty text.

This limited warranty will become null and void if: (1) The SSV was used for racing or any other competitive activity, at any point, even by a previous owner; or (2) the SSV has been altered or modified in such a way so as to adversely affect its operation, performance or durability, or has been altered or modified to change its intended use.

2) LIMITATIONS OF LIABILITY

TO THE EXTENT PERMITTED BY LAW, THIS WARRANTY IS EXPRESSLY GIVEN AND ACCEPTED IN LIEU OF ANY AND ALL OTHER WARRANTIES, EXPRESSED OR IMPLIED, INCLUDING WITHOUT LIMITATION ANY WARRANTY OF MERCHANTABILITY OR FITNESS FOR A PARTICULAR PURPOSE. TO THE EXTENT THAT THEY CANNOT BE DISCLAIMED, THE IMPLIED WARRANTIES ARE LIMITED IN DURATION TO THE LIFE OF THE EXPRESS WARRANTY. INCIDENTAL AND CONSEQUENTIAL DAMAGES ARE EXCLUDED FROM COVERAGE UNDER THIS WARRANTY. SOME JURISDICTIONS DO NOT ALLOW FOR THE DISCLAIMERS, LIMITATIONS AND EXCLUSIONS IDENTIFIED ABOVE, AS A RESULT, THEY MAY NOT APPLY TO YOU. THIS WARRANTY GIVES YOU SPECIFIC RIGHTS, AND YOU MAY ALSO HAVE OTHER LEGAL RIGHTS WHICH MAY VARY FROM COUNTRY TO COUNTRY.

Neither the Can-Am SSV Distributor/Dealer nor any other person has been authorized to make any affirmation, representation or warranty regarding the product, other than those contained in this limited warranty, and if made, shall not be enforceable against BRP.

BRP reserves the right to modify this warranty at any time, being understood that such modification will not alter the warranty conditions applicable to the products sold while this warranty is in effect.

3) EXCLUSIONS – ARE NOT WARRANTED

The following are not warranted under this limited warranty under any circumstances:

– Normal wear and tear;
– Routine maintenance items, tune ups, adjustments (parts and labor);

– Damage caused by negligence or failure to provide proper maintenance and/or storage, as described in the Operator's Guide;
– Damage resulting from removal of parts, improper repairs, service, maintenance, modifications or use of parts not manufactured or approved by BRP or resulting from repairs done by a person that is not an authorized servicing Can-Am SSV Distributor/Dealer;
– Damage caused by abuse, abnormal use, neglect or operation of the product in a manner inconsistent with the recommended operation described in the Operator's Guide;
– Damage resulting from accident, submersion, fire, snow or water ingestion, theft, vandalism or any act of God;
– Operation with fuels, oils or lubricants which are not suitable for use with the product (see the Operator's Guide);
– Damage resulting from rust, corrosion or exposure to the elements;
– Incidental or consequential damages, or damages of any kind including without limitation towing, transportation expenses, storage, telephone, rental, taxi, inconvenience, insurance coverage, loan payments, loss of time, loss of income or time missed for downtime experience due to service work.

4) WARRANTY COVERAGE PERIOD

This warranty will be in effect from (1) the date of delivery to the first retail consumer or (2) the date the product is first put into use, whichever occurs first and for a period of:

– TWENTY-FOUR (24) CONSECUTIVE MONTHS for private use.
– SIX (6) CONSECUTIVE MONTHS for commercial use or rental use.

The product is used commercially when it is used in connection with any work or employment that generates income during any part of the warranty period. The product is also used commercially when, at any point during the warranty period, it is licensed for commercial use.

The repair or replacement of parts or the performance of service under this warranty does not extend the life of this warranty beyond its original expiration date.

Note that the duration and any other modalities of the warranty coverage are subject to the applicable national or local legislation in your country.

5) CONDITIONS TO HAVE WARRANTY COVERAGE

This warranty coverage is available **only** if **each** of the following conditions has been fulfilled:

– The 2017 Can-Am SSV must be purchased as new and unused by its first owner from a Can-Am SSV Distributor/Dealer authorized to distribute Can-Am SSVs in the country in which the sale occurred;
– The BRP specified pre-delivery inspection process must be completed and documented;
– The product must have undergone proper registration by an authorized Can-Am SSV Distributor/Dealer;

– The 2017 Can-Am SSV must be purchased in the country or union of countries in which the purchaser resides; and
– Routine maintenance outlined in the Operator's Guide must be timely performed in order to maintain warranty coverage. BRP reserves the right to make warranty coverage contingent upon proof of proper maintenance.

BRP will not honor this limited warranty to any private use owner or commercial use owner if one of the preceding conditions has not been met. Such limitations are necessary in order to allow BRP to preserve both the safety of its products, and also that of its consumers and the general public.

6) WHAT TO DO TO OBTAIN WARRANTY COVERAGE

The customer must cease using the SSV upon the appearance of an anomaly. The customer must notify a servicing Can-Am SSV Distributor/Dealer within two (2) months of the appearance of a defect and provide it with reasonable access to the product and reasonable opportunity to repair it. The customer must also present to the authorized Can-Am SSV Distributor/Dealer, proof of purchase of the product and must sign the repair/work order prior to starting the repair in order to validate the warranty repair. All parts replaced under this limited warranty become the property of BRP.

Note that the notification period is subject to the applicable national or local legislation in your country.

7) WHAT BRP WILL DO

To the extent permitted by law, BRP's obligations under this warranty are limited to, at its sole discretion, repairing parts found defective under normal use, maintenance and service, or replacing such parts with new genuine Can-Am SSV parts without charge for parts and labor, at any authorized Can-Am SSV Distributor/Dealer during the warranty coverage period under the conditions described herein. BRP's responsibility is limited to making the required repairs or replacements of parts. No claim of breach of warranty shall be cause for cancellation or rescission of the sale of the Can-Am SSV to the owner. You may have other legal rights which may vary from country to country.

In the event that service is required outside of the EEA, the owner will bear responsibility for any additional charges due to local practices and conditions, such as, but not limited to, freight, insurance, taxes, license fees, import duties, and any and all other financial charges, including those levied by governments, states, territories and their respective agencies.

BRP reserves the right to improve or modify products from time to time without assuming any obligation to modify products previously manufactured.

8) TRANSFER

If the ownership of a product is transferred during the warranty coverage period, this warranty shall also be transferred and be valid for the remaining coverage period provided BRP or an authorized Can-Am SSV Distributor/Dealer receives a proof that the former owner agreed to the transfer of ownership, in addition to the co-ordinates of the new owner.

9) CONSUMER ASSISTANCE

In the event of a controversy or a dispute in connection with this limited warranty, BRP suggests that you try to resolve the issue at the Can-Am SSV Distributor/Dealer level. We recommend discussing the issue with the authorized Can-Am SSV Distributor/Dealer's service manager or owner.

If the matter still remains unresolved, contact BRP by filling out the customer contact form at www.brp.com or contact BRP by mail at one of the addresses listed under the *CONTACT US* section of this guide.

* In the EEA, products are distributed and serviced by BRP European Distribution S.A. and other affiliates or subsidiaries of BRP.

© 2016 Bombardier Recreational Products Inc. All rights reserved.
® Trademark of Bombardier Recreational Products Inc. or its affiliated.

ADDITIONAL TERMS AND CONDITIONS FOR FRANCE ONLY

The following terms and conditions are applicable to products sold in France only:

The seller shall deliver goods that are complying with the contract and shall be responsible for defects existing upon delivery. The seller shall also be responsible for defects resulting from packaging, assembling instructions or the installation when it is its responsibility per the contract or if accomplished under its responsibility. To be compliant with the contract, the good shall:

1. Be fit for normal use for goods similar thereto and, if applicable:
   - Correspond to the description provided by the seller and have the qualities presented to the buyer though sample or model;
   - Have the qualities that a buyer may legitimately expect considering the public declarations of the seller, the manufacturer of its representative, including in advertising or labeling; or
2. Have the characteristics mutually agreed upon as between the parties or be fit for the specific use intended by the buyer and brought to the attention of the seller and which accepted.

The action for failure to comply is prescribed after two years after delivery of the goods. The seller is responsible for the warranty for hidden defects of the goods sold if such hidden defects are rendering the good unfit for the intended use, or if they diminish its use in such a way that the buyer would not have acquired the good or would have given a lesser price, had he known. The action for such hidden defects shall be taken by the buyer within 2 years of the discovery of the defect.

CUSTOMER INFORMATION

NOTES

NOTES

⚠ WARNING

To reduce risk of serious injury or death, read this Operator's Guide and safety labels, watch the safety video and:

Be prepared

- Fasten seat belts and make sure nets and doors are securely latched in place.
- Wear an approved helmet and protective gear.
- Each rider must be able to sit with back against seat, foot flat on the floor or on footrest, and hands on steering wheel or handholds. Stay completely inside the vehicle.

Drive responsibly

- Avoid loss of control and rollovers.
- Avoid abrupt maneuvers, sideways sliding, skidding or fishtailing and never do donuts.
- Avoid hard acceleration when turning, even from a stop.
- Slow down before entering a turn.
- Plan for hills, rough terrain, ruts and other changes in traction and terrain.
- Avoid paved surfaces.
- Avoid side hilling (riding across slopes).

Be Qualified and Responsible

- Do not allow careless or reckless driving.
- Driver must be at least 16 years old with a valid driver's license.
- Do not operate after using drugs or alcohol.
- Do not allow operation on public roads (unless designated for off-highway vehicle access) – collisions with cars and trucks can occur.
- Do not exceed vehicle seating capacity.

219 001 884
OPERATOR'S GUIDE MAVERICK X3 Series/ENGLISH
GUIDE DU CONDUCTEUR Séries MAVERICK X3 /ANGLAIS

FAIT AU / MADE IN CANADA U/M:P.C.

2017 ACCESSORIES
RIDING GEAR
GENUINE PARTS

OUTLANDER
RENEGADE
DEFENDER
MAVERICK
COMMANDER







can-am
Can-AmOffRoad.com

WHY CHOOSE CAN-AM ACCESSORIES?

QUALITY & SEAMLESS INTEGRATION.

It's that simple. Our commitment to innovation, high-quality materials and seamless integration means we know exactly what it takes to the accessories for our industry-leading ATVs and Side-by-Side vehicles. Accessories that fit in, fit right, look great, are made to last, and are the only ones that can transform any Can-Am into your Can-Am.

TRUST & RELIABILITY.

Quality and confidence are built into everything we make, even our warranty. That's why off-road enthusiasts trust Can-Am accessories. It's a responsibility we take seriously, so you'll be pleased to know that genuine BRP parts, accessories and riding gear[1] are covered for an entire year[2] - no matter when they're purchased[3]. And if it's a BRP Partner aftermarket product and BRP or an authorized dealer sells it, it's also covered[4]! Add to that a 4-year limited warranty on helmets and it's clear: our commitment to quality and to you is rock solid.

In addition, our limited warranty comes with significant added value, because labor and collateral damage to the vehicle may be covered only if the failed part or accessory was installed by a BRP authorized dealer or distributor. We Back Only The Best - Which is why for generations you've trusted us to get you there, and you know you can trust us to keep you going.

PERFORMANCE & PERSONALITY.

Can-Am. It's power, performance, freedom and versatility driven by unrivalled quality and reliability. Can-Am can quench your thirst for adventure and help get things done. Nothing beats our huge range of customized accessories designed to get the most out of every thrill, every mile, and every job.

CATCH THE VIDEO AT STORE.CAN-AM.BRP.COM

VISIT YOUR DEALER TODAY AND CREATE YOUR VERY OWN CAN-AM.



See your local dealer for details.

[1] BRP or BRP Partner accessories purchased at an authorized BRP dealership / distributor OR on a BRP-authorized online store. This warranty does not apply to factory-installed accessories. Excludes B.E.S.T extended service. Certain conditions apply. See your local dealer for details.

[2] From date of purchase.

[3] This limited warranty is effective as of March 1st, 2016.

[4] Under the limited warranty. Applies only to BRP-made products or aftermarket products made by accredited BRP partners.


MAVERICK
ROTAX

2017 ACCESSORIES RIDING GEAR GENUINE PARTS



Be sure to consult our convenient ATV & Side-by-side vehicle accessory COMPATIBILITY GUIDES before outfitting your vehicle.

ATV ACCESSORIES

16 COMPATIBILITY GUIDE

OUTLANDER, RENEGADE & OUTLANDER 6 X 6

18 CARGO
24 WINDSHIELDS
26 HANDLEBARS & MIRRORS
27 RACKS
30 SKID PLATES
34 BUMPERS
36 LIGHTING & ELECTRICAL
39 WINCHES
41 HITCHES
42 PERFORMANCE
46 APACHE 360 TRACK SYSTEMS
48 PLOWS
55 COVERS, DECALS AND ADD-ONS
56 OUTLANDER 6x6 ACCESSORIES

SIDE-BY-SIDE VEHICLE ACCESSORIES

68 COMPATIBILITY GUIDE

MAVERICK X3

71 ROOFS
73 WINDSHIELDS & MIRRORS
75 DOORS & REAR WIND PROTECTION
76 SKID PLATES
77 BUMPERS & PROTECTION
82 SEATS
83 CARGO & RACKS
84 LIGHTING
87 ELECTRICAL
88 WINCHES & HITCHES
88 PERFORMANCE
89 COVER

DEFENDER, MAVERICK & COMMANDER

96 ROOFS
101 WINDSHIELDS & MIRRORS
105 DOORS
108 REAR WIND PROTECTION
111 SKID PLATES
115 BUMPERS & PROTECTION
130 CARGO & RACKS
144 LIGHTING
150 ELECTRICAL
155 WINCHES & HITCHES
158 SEATS
159 PERFORMANCE
164 APACHE 360 LT TRACK SYSTEM
166 PLOWS
168 COVERS & ADD-ONS

© 2016 Bombardier Recreational Products Inc. (BRP). All rights reserved. ®, ™ and the BRP logo are trademarks of BRP or its affiliates. CARLISLE is a trademark of Carlisle Companies. CHAMUDE and HIPORA are registered trademarks of Kolon Industries, Inc. CLARINO is a trademark of Kuraray Co. Ltd. COOLMAX and THERMOLITE are registered trademark of INVISTA for durable fabrics. DRIRELEASE is a registered trademark of Optimer Inc. FOX is a registered trademark of Fox Racing Canada. GARMIN and MONTANA are registered trademarks of Garmin Ltd. iPod is a registered trademark of Apple Inc. KOLPIN, GUN BOOT and IMPACT are registered trademarks of Kolpin Powersports Inc. KYB is a registered trademark of Kayaba. MicroSD is a registered trademark of SD Card Association. Mud Lite XTR and SS312 are trademarks of ITP Tires. NEXT G-1 VISTA is a trademark of Next Camo, LLC. NGK is a registered trademark of NGK Spark Plugs, Ltd. PRIMALOFT GOLD and PRIMALOFT BLACK are registered trademarks of Albany International Corp. SUPERWINCH and S SUPERWINCH (design) are registered trademarks of Superwinch LLC. TEFLON, TEFLON HT and KEVLAR are trademarks of E.I. DuPont de Nemours & Co. TWINAIR is a trademark of Twin Air USA.UNI is a trademark of UNIFILTER Inc. VELCRO is a registered trademark of Velcro Industries. WARN is a trademark of Warn Industries Inc. YUASA is a registered trademark of YUASA Batteries Inc. ZILLA and BIGHORN 2.0 are trademarks of Maxxis. SCOTT is a trademark of Scott Sports SA. The following trademarks are the property of their respective owners: BLUETOOTH, CREE, DURO, DWT, HELLA, ITP, KENDA, MOSSY OAK, RAM, SUR LAST, VISION, XPS and YOSHIMURA. DRAGONFIRE is a trademark of KRANSCO. Baja Designss is a registered trademark of Baja Designss Inc. S3 POWERSPORTS is a trademark of S3 Power Sports LLC. Some models depicted herein may include optional equipment. Prices, if shown, are based on Manufacturer Suggested Retail Prices. Dealers may sell for a different price. For Canada & US. taxes are not included. Depending on location, products are distributed by BRP US Inc., Bombardier Recreational Products Inc., BRP European Distribution SA, BRP Finland Oy., BRP Australia Pty Ltd. or BRP Brasil Motorsports LTDA. BRP reserves the right, at any time, to discontinue or change specifications, prices, designs, features, equipment without incurring obligation. Printed in Canada.







RIDING GEAR

176 KAPPA
186 SPORTSWEAR
191 TEEN & KIDSWEAR
192 CYCLOPS GEAR CAMERAS
193 HELMETS
201 BLUETOOTH COMMUNICATION SYSTEMS
202 GOGGLES
204 GLOVES
205 JERSEYS
206 JACKETS & PANTS
211 BOOTS
213 TECHNOLOGY GUIDE
214 TECHNICAL WEAR
216 BAGS
217 SIZING CHART

TIRES & RIMS

169 TIRES
171 RIMS

PARTS & MAINTENANCE

218 PARTS
221 OILS & MAINTENANCE

VISIT US AT CAN-AMOFFROAD.COM

Shop the online store for genuine parts, accessories and riding gear.

Explore our interactive online catalog. Instantly explore products, videos, large format images and share with friends!

Check out our videos to learn more about our new innovative riding gear and accessories.

XPS

Learn about and purchase XPS oils and lubricants.

A HUNT IS A SERIOUS THING.

Be ready for anything with our extensive collection of vehicle accessories that'll help you make quick work of any prey, any day. The chase is on…



ATV ACCESSORIES P. 10



SIDE-BY-SIDE VEHICLE ACCESSORIES P. 62



SPORTSWEAR & RIDING GEAR P. 174



RIGHT FOR THE JOB.

Nothing's done until it's done, and you never run out of things to do. Thankfully we're not about to run out of great accessories that'll help you with any of those jobs.



ATV ACCESSORIES P. 10



SIDE-BY-SIDE VEHICLE ACCESSORIES P. 62



SPORTSWEAR & RIDING GEAR P. 174



ADVENTURE TASTES BETTER WHEN SHARED WITH FRIENDS.

There's just something about getting out, and getting away, and nothing makes it easier, or more fun than the right accessories and gear.



ATV ACCESSORIES P. 10



SIDE-BY-SIDE VEHICLE ACCESSORIES P. 62



SPORTSWEAR & RIDING GEAR P. 174

PUMP IT UP.

The new Maverick X3 accessories offer an entirely new level of enjoyment and are designed to enhance your machine's already impressive comfort and great looks.







MAVERICK X3 ACCESSORIES P. 70-89

EXPERT PARTNERSHIPS DELIVER EXCITING PRODUCTS.

In 2017, Can-Am is making the most of its association with world-class partners. Together we'll be bringing the very best in side-by-side gear and accessories that'll make it a year to remember.



CG360



CGX2

CYCLOPSGEAR

CATCH ALL THE ACTION

It'll be easier, and more exciting than ever to catch all the action thanks to our new association with Cyclops Gear. When it comes to high-tech, high-action ultra-durable cameras, Cyclops Gear has it hands down.

We'll be putting their feature-packed CGX2 and CG360 cameras front and center – both ride on the cutting edge of innovative action cams, and together with Can-Am the results are going to be pure adrenaline.

SEE P.192



KAPPA DOES IT IN STYLE!

Kappa, a world leader in sportswear, is about to make its mark on Can-Am drivers everywhere because in 2017, we'll be featuring some of their best - 4 dynamic clothing collections including 6 new exciting jersey designs.

Kappa's sense of style is a perfect reflection of your own and gives a whole new meaning to living life, and riding, your way. Can-Am and Kappa are bound to turn a few heads.

SEE P.176-185

LSR LONESTAR RACING for can-am

RACING-INSPIRED EXCELLENCE THAT'S CUSTOM CAN-AM!

BRP and Lonestar Racing are teaming up to offer Can-Am side-by-side drivers an unparalleled range of distinctive racing-inspired performance accessories including several designed for the all-new Maverick X3.

It's an opportunity to get your hands on premium Commander, Maverick and Maverick X3 components that look great and ride tough: aluminum roofs, bumpers, intrusion bars and much more, all exclusively for Can-Am, available in matching Can-Am colors. It's going to be a win-win year for side-by-side drivers who ride on the edge!

SEE P.72, 78, 86, 89, 122, 123, 161



BEARD FOR can-am

STYLE & COMFORT RIDE SEAT!

Beard, among the leading aftermarket seat manufacturers, is offering exceptional seat packages for Can-Am side-by-side vehicles including an exclusive design engineered for the all-new Maverick X3 and available in 3 matching colors.

Sold in pairs, these innovative welded-steel frame seats are stylish and rugged. Designed to absorb impacts, they're 4-point-harness compatible, offering enhanced side containment that secures the occupant so that they can focus on their drive and not on staying balanced while maneuvering over rough terrain.

SEE P.82, 158





baja designs

BRIGHT LIGHTS FOR MAVERICK X3!

Baja Designs engineers are considered to be the "Scientists of Lighting" in racing circles. They're the standard bearers for innovative motorcycle and automobile lighting, and a great option for your Can-Am vehicle as well.

Baja Design and Can-Am are in lockstep, ensuring our Maverick X3 benefit from superior lighting technology that looks great, and works flawlessly. It's clear: Baja Designs truly are lighting the way ahead.



SEE P.84, 85



S3 FOR can-am



THE ONLY WAY TO GET DOWN AND DIRTY!

Great partners are inspiring – like S3. In 2016 S3 has put its energy and passion for powersports into outstanding accessories for our Defender.

S3 understands, and that's why we're proud of our association with them. They're mad for mud and absolutely obsessed with creating high-quality, trail-tough, work-ready accessories that are practical, and practically indestructible. Time to hit the dirt!

SEE P.119, 162



DragonFire FOR can-am



DEFENDER-TOUGH PROTECTION ALL THE WAY!

Dragonfire is making quite a name for itself for its world-class off-road accessories. Tough and built to last, they're proof that Dragonfire has got the drive and determination to be a select Can-Am partner.

Dragonfire's exceptional range of customized body protection and convenience components are designed specifically for our Defender side-by-side vehicles, and they won't disappoint. And it's only the beginning, because Dragonfire never stops thinking, and we never stop giving them reasons to innovate and excel.

SEE P.120, 122

CAN-AM ATV ACCESSORIES

EXTRA EXCITEMENT & ADDED CONVENIENCE

And we've got everything you need to make it as versatile and adaptable as you have to be every single day. Choosing Can-Am means choosing to do things your way.

ACCESSORY RECOMMENDATIONS

IT'S AN EASY CHOICE.

Whatever you do, and however you want to do it, we've got solutions. And we've made choosing the right accessory easier than ever. Take your pick…



P. 12-15

ACCESSORY COMPATIBILITY GUIDE

THE RIGHT FIT.

Be sure to consult our convenient ATV accessory compatibility guides before outfitting your vehicle.



P. 16-17

CARGO BOX OPTIONS

WHO SAYS YOU CAN'T BRING IT WITH YOU?

We've given plenty of room for your stuff with a range of convenient, flexible and durable storage solutions. There's one built for you, and ready to go.



P. 18-23



OUTLANDER

16 COMPATIBILITY GUIDE
18 CARGO
24 WINDSHIELDS
26 HANDLEBARS & MIRRORS
27 RACKS
30 SKID PLATES
34 BUMPERS
36 LIGHTING & ELECTRICAL
39 WINCHES
41 HITCHES
42 PERFORMANCE
46 APACHE 360 TRACK SYSTEMS
48 PLOWS
55 COVERS, DECALS & ADD-ONS
169 TIRES
172 RIMS



RENEGADE

16 COMPATIBILITY GUIDE
18 CARGO
25 WINDSHIELDS
26 HANDLEBARS & MIRRORS
27 RACKS
32 SKID PLATES
35 BUMPERS
36 LIGHTING & ELECTRICAL
39 WINCHES
41 HITCHES
42 PERFORMANCE
46 APACHE 360 TRACK SYSTEMS
48 PLOWS
55 COVERS, DECALS & ADD-ONS
169 TIRES
172 RIMS



OUTLANDER 6X6

16 COMPATIBILITY GUIDE
56 APACHE 360 LT TRACK SYSTEM
57 HARD TOP
57 LOG BARS
57 TAILGATE EXTENSION/DIVIDER
57 TAILGATE LIMITER KIT
58 18 GAL (70L) UTILITY BOX
58 FLATBED PROTECTION TUBES
58 REAR WINCH KIT
59 TARPAULIN
59 STORAGE COVER
59 FULL BODY SKID PLATE
169 TIRES
172 RIMS

THE CHOICE IS YOURS.







ACCESSORIES FOR YOUR RIDE.

UTILITY ACCESSORIES

1. High Windshield p. 25
2. LinQ Base p. 22
   LinQ Heavy-Duty Basket p. 23
3. 5" (13 cm) Rack Extension p. 28
4. Multi-Fit Holder p. 29
5. Extreme Front Bumper p. 35
6. XT Rear Bumper p. 35
7. XT Front Bumper p. 35
8. Front Bumper Lights p. 38
9. Fender Flare p. 43



OUTLANDER 450 / 570

ADVENTURE ACCESSORIES

1. Deluxe Fairing p. 24
2. High Windshield p. 24
3. LinQ 23 Gal (86 L) Trunk Box p. 20
4. LinQ 6" (15 cm) Rack Extension p. 27



OUTLANDER

TRAIL ACCESSORIES

1. Sport Windshield p. 25
2. Handlebar Wind Deflectors p. 26
3. LinQ Luggage Rack p. 28
4. LinQ 11.5 Gal (43 L) Audio Cargo Box p. 21



RENEGADE

THE CHOICE IS YOURS.



HUNTING

SUCCESS IS YOUR PREY. DETERMINATION IS YOUR STRATEGY.



WINTER

OTHERS HEAD SOUTH. YOU HEAD OUT.



MUD

MUD IS MEAN. YOU'RE MEANER.

ACCESSORIES FOR YOUR RIDE.

HUNTING ACCESSORIES

1. Gear Grips by Kolpin p. 29
2. LinQ Gun Boot Rack p. 29
   Gun Boot 6.0 Impact by Kolpin p. 29
3. XT Front Bumper p. 35
4. XT Rear Bumper p. 35
5. RAM Spotlight p. 38



OUTLANDER

WINTER ACCESSORIES

1. LinQ Base p. 22
   LinQ Heavy-Duty Basket p. 23
2. High Windshield Kit p. 25
3. 8" (20 cm) Rack Extension p. 28
4. XT Rear Bumper p. 35
5. 60" (152 cm) Alpine Flex Plow Kit p. 49



OUTLANDER
450 / 570

MUD ACCESSORIES

1. LinQ Luggage Rack p. 28
2. Yoshimura Slip-On Exhaust p. 44
3. LinQ 12 Gal (45L) Cargo Box p. 21
4. Mud Strap p. 42
5. Renegade Snorkel Kit p. 43
6. Renegade Extreme Front Bumper p. 35
7. Renegade Radiator Relocator Kit p. 43



RENEGADE

ATV ACCESSORY COMPATIBILITY GUIDE

WE'VE MADE THINGS SUPER SIMPLE.

Determine your model year, find your model and engine configuration, and that'll reveal your platform code. This code will let you know at a glance if the accessory is compatible with your vehicle.

EXAMPLE



FULL WRAP ALUMINUM MOUNTING KIT

- Lightweight black die cast aluminum construction.
- Includes complete hardware.
- Handlebar wind deflectors sold separately.

Fits: G2, G2L, G2S

715001378

$84.99

	MODEL	ENGINE	PLATFORM
2012	Outlander	400, 500, 650	G1
	Outlander	800, 1000	G2
	Outlander MAX	400, 500, 650, 800	G1
	Renegade	500	G1S
	Renegade	800, 1000	G2S
	DS	70, 90, 250, 450	DS
2013	Outlander	400	G1
	Outlander	500, 650, 800, 1000	G2
	Outlander MAX	400	G1
	Outlander MAX	500, 650, 800, 1000	G2
	Renegade	500, 800, 1000	G2S
	DS	70, 90, 250, 450	DS



G1



G1S

For G1 and DS accessories, refer to your local dealer.

	MODEL	ENGINE	PLATFORM
2014	Outlander	400	**G1**
	Outlander	500, 650, 800, 1000	**G2**
	Outlander MAX	400	**G1**
	Outlander MAX	500, 650, 800, 1000	**G2**
	Renegade	500, 800, 1000	**G2S**
	DS	70, 90, 250, 450	**DS**
2015	Outlander L	450,500	**G2L**
	Outlander	500, 650, 800, 1000	**G2**
	Outlander L MAX	450, 500	**G2L**
	Outlander MAX	500, 650, 800, 1000	**G2**
	6x6	650, 1000	**G2**
	Renegade	500, 800, 1000	**G2S**
	DS	70, 90, 250, 450	**DS**
2016	Outlander L	450, 570	**G2L**
	Outlander	570, 650, 850, 1000	**G2**
	Outlander L MAX	450, 570	**G2L**
	Outlander MAX	570, 650, 850, 1000	**G2**
	6x6	650, 1000	**G2**
	Renegade	570, 850, 1000	**G2S**
	DS	90, 250	**DS**
2017	Outlander	450, 570	**G2L**
	Outlander	650, 850, 1000	**G2**
	Outlander MAX	450, 570	**G2L**
	Outlander MAX	650, 850, 1000	**G2**
	6x6	650, 1000	**G2**
	Renegade	570, 850, 1000	**G2S**
	DS	70, 90, 250	**DS**

For G1 and DS accessories, refer to your local dealer.



G2



G2L



G2S



G2



CARGO BOX OPTIONS

CHOOSE THE STORAGE SOLUTION THAT FITS YOU.

When it comes to cargo, we've got a cargo box that suits your needs, your vehicle, and everything you need to bring along for the ride, and in the case of our LinQ 11.5 Gal (43L). Audio Cargo Box, that includes your favorite tunes!

All our cargo boxes are built rugged, and install or remove instantly. They're ideal for work or play, ride after ride after ride.

CATCH THE VIDEO AT STORE.CAN-AM.BRP.COM

LinQ SYSTEM™ TRUNK BOXES



LinQ 8 GAL / 30L
715002892 P.20



LinQ 11.5 GAL / 43L
715003018 P.21



LinQ 12 GAL / 45L
715001936 P.21



LinQ 20 GAL / 74L
715002473 P.20



LinQ 23 GAL / 86L
715002474 P.20



LinQ 32 GAL / 124L
715001749 P.19 715001747 P.19

OUTLANDER RENEGADE

LinQ 32 GAL (124L) TRUNK BOXES

SEAMLESS INTEGRATION WITH VEHICLE
- Built from the design stage to specifically match your Can-Am vehicle.
- Totally cohesive design eliminates the need to modifiy your vehicle in any way*.
- Rear tail light.

EASY QUICK-ATTACH INSTALLATION
- Equipped with the LinQ System, the rear trunk box plugs in and out in seconds.
- Instantly transforms your vehicle to suit the need of the moment.

UNPARALLELED STORAGE
- 32 Gal (124L) load capacity with contiguous unobstructed space to maximize storage room and access to the trunk's interior.

BUILD TOUGH
- Made of injection-molded polyethylene, double walled in critical areas.

DUST & WEATHER PROOF
- The fully sealed lid protects your belongings from dust, moisture and the elements.



LinQ 32 GAL (124L) TRUNK BOX
- LinQ Retrofit Adaptor Plate (715001334) is required for G1 models.
- Trunk Box Panels available in many colors to match your vehicle (sold separately).
- LinQ Luggage Rack (715001734) is required for G2S.

Fits: G2 (except MAX models & 6x6), G2S

715001747

$349.99



Ergonomic padding made of closed cell foam.

LinQ 32 GAL (124L) TRUNK BOX FOR OUTLANDER MAX
- Passenger comfort is ensured on active rides as well as longer recreational rides thanks to the ergonomically designed passenger padding comfort-fitted with a portion made of closed cell foam that won't absorb water.
- Very easy to embark even when driver is seated.
- Trunk Box Panels available in many colors to match your vehicle (sold separately).

Fits: G2 (MAX models only)

715001749

$429.99

LinQ 32 GAL (124L) TRUNK BOX PANELS
- Color panels to match the 32 Gal (124L) LinQ Trunk Box to your vehicle.

Fits: LinQ 32 Gal (124L) Trunk Boxes

715001391 • Black
715001392 • Yellow
715001395 • Viper Red
715002481 • White
715002480 • Light Grey
715002984 • Octane Blue
715002985 • Manta Green
715002986 • Can-Am Red

$39.99

EUROPEAN VERSION (EC compliant)
- No rear tail light

715001397 • Black
715001398 • Yellow
715002482 • Light Grey
715002483 • White



CAMO DECALS FOR BLACK TRUNK BOX PANELS
- Camo pattern perfectly matches your camo vehicle.

Fits: Black LinQ 32 Gal (124L) Trunk Box Panel

715002975 • Mossy Oak Break-Up Country Camo

$44.99

715001683 • Next G-1 Vista Camo

$44.99



Mossy Oak Break-Up Country



Next G-1 Vista



LinQ REPLACEMENT PART

715001707

$19.99

* WARNING: You should never accessorize your Can-Am Off-road vehicle with accessories not approved by BRP because your vehicle may no longer meet certain safety and construction standards. This situation could increase the risk of severe injury or death and render your vehicle not legal for use.

NOT SURE IF AN ACCESSORY FITS YOUR MODEL? CHECK OUT OUR ACCESSORY COMPATIBILITY GUIDE ON P.16-17!



OUTLANDER RENEGADE

LinQ SYSTEM™

NEW

LinQ 8 GAL (30L) COOLER BOX

· Rotomolded construction provides exceptional rigidity and durability.
· Premium-quality foam insulation.
· Integrated, fully-removable compartment protects food.
· Weather-resistant, lockable.
· Convenient drain plug.
· Fits on all vehicles using a LinQ rack.
· LinQ Luggage Rack (715001734) is required for G2S.

Fits: G2, G2S

715002892

$349.99





LinQ SYSTEM™

LinQ 20 GAL (74L) TRUNK BOX

• Installs without vehicle modification.
• LinQ mount for easy-on, easy-off installation.
• Lockable and weather-resistant.
• Holds cargo safely and securely while riding.
• LinQ Base (715002350) is required for G2L.
• LinQ Luggage Rack (715001734) is required for G2S.

Fits: G2 (except MAX & 6x6), G2L (except MAX models), G2S

715002473

$259.99



LinQ SYSTEM™

LinQ 23 GAL (86L) TRUNK BOX

• Installs without vehicle modification.
• LinQ mounted for easy-on, easy-off installation.
• Lockable and weather-resistant.
• Holds cargo safely and securely while riding.
• Comfort pads for passenger.
• LinQ Base (715002350) is required for G2L.

Fits: G2 (MAX models only except 6x6), G2L (MAX models only)

715002474

$279.99



OUTLANDER RENEGADE

CATCH THE VIDEO AT STORE.CAN-AM.BRP.COM



MUST HAVE

LinQ SYSTEM

NEW

LinQ 11.5 GAL (43L) AUDIO CARGO BOX

- Delivers the best sound quality on the market to sweeten your ride courtesy of a built-in full range high efficiency amplifier.
- Mounts on/off easily to hold/carry cargo safely and securely.
- Automatic shut-off function protects your battery by turning the system off after 10 minutes of inactivity.
- The Bluetooth enabled receiver and 6.5" (16.5 cm) speakers are smartly concealed and integrated in the cover.
- Backlit control panel perfect for night riding.
- LinQ Base (715002350) is required for G2L.
- LinQ Luggage Rack (715001734) is required for G2S.

Fits: G2 (front only for 6x6 & MAX models 2013-2014), G2L, G2S

715003018

$549.99



LinQ SYSTEM

LinQ 12 GAL (45L) CARGO BOX

- Installs without vehicle modification.
- LinQ mounted for easy-on, easy-off installation.
- Flip-over cover becomes a tray.
- Holds cargo safely and securely while riding.
- LinQ Base (715002350) is required for G2L.
- LinQ Luggage Rack (715001734) is required for G2S.

Fits: G2 (front only for 6x6 & MAX models 2013-2014), G2L, G2S

715001936

$209.99

LinQ SYSTEM

LinQ DELUXE MODULAR BAG

- Tool-less installation and removal.
- Versatile, rugged and spacious.
- Ideal for carrying anything you need in any conditions.
- Weatherproof, scratch-resistant, with molded rubber bottom.
- Central compartment can be used alone on the rack.
- Removable bin.
- LinQ Luggage Rack (715001734) is required for G2S.

Fits: G2 (front only for 6x6), G2S

12 Gal (44L) Bag

715001695

$249.99

20 Gal (73L) Bag

715001694

$289.99



OUTLANDER RENEGADE

SOFT STORAGE BAG

- 3-section bag.
- Transport gear in a weatherproof bag.
- 6" (15 cm) tall soft cargo bag designed with vehicle's rear or front rack and rack extensions in mind to maximize potential storage.
- LinQ Luggage Rack (715001734) is required for G2S.

Fits: G2, G2L, G2S

715001934 • Black

$134.99

NEW **715001935**

Mossy Oak Break-Up Country Camo

$169.99







REAR TRUNK BOX 25 GAL (95L)

- Perfect fit with vehicle.
- Made of impact-resistant polyethylene.
- Fully sealed lid.
- Tray quick-hooks to box.
- Molded handle makes lifting and moving the box easy.
- Equipped with lid key lock.
- Robust double wall lid.
- Improved trunk latch and attachment system on rack.
- Cannot be used with Rear Rack Extensions.
- LinQ Luggage Rack (715001734) is required for G2S.

Fits: G2, G2S (except X mr)

715001842 • Black

$289.99



LinQ SYSTEM

LinQ STORAGE BOX 2 GAL (7.5L)

- Features easy quick-attach LinQ installation on Outlander front and rear racks.
- Also installable behind the driver seat on Outlander MAX.
- Fully sealed box provides additional storage for essential and valuable items.
- LinQ Luggage Rack (715001734) is required for G2S.

Fits: G2, G2S

708200255

$69.99

Fits: G2, G2L (Outlander L MAX only behind the driver seat), G2S

708200408

$69.99

REAR COMPARTMENT STORAGE 2.6 GAL (10L) BAG

- Roll-top dry bag for fully protecting your cargo from the elements.
- Fits in rear compartment of your vehicle.

Fits: G2

2695021210

$29.99



LinQ SYSTEM

LINQ BASE

(Not illustrated)

- Made of polypropylene glass fiber.
- Allows you to install LinQ accessories.

Fits: G2L

715002350

$19.99

CARGO BAG

- Rugged all-purpose cargo bag with rain cover for additional protection against the elements.
- LinQ Luggage Rack (715001734) is required for G2S.

Fits: G2, G2L, G2S

280000539 • Black

$154.99



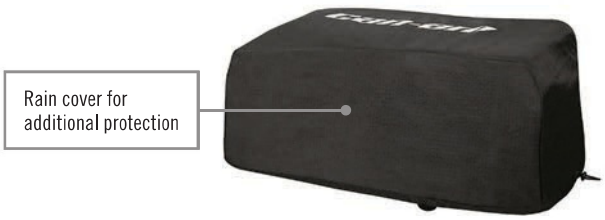



OUTLANDER RENEGADE

CATCH THE VIDEO AT STORE.CAN-AM.BRP.COM



LinQ SYSTEM

LinQ HEAVY-DUTY BASKET

- Made of high-strength, low-alloy steel.
- Installs without vehicle modification.
- LinQ mount for easy-on, easy-off installation.
- Can be placed on both front and back racks of vehicle.
- LinQ Base (715002350) is required for G2L.
- LinQ Luggage Rack (715001734) is required for G2S.

Fits: G2, G2L (front only for MAX), G2S

715001215

$209.99

LinQ SYSTEM

NEW

LinQ LOW PROFILE BASKET

(Not illustrated)

- Low profile, open basket increases cargo space.
- Perfect for easy access to tools, rope, winch and plow accessories.
- Multiple bungee cord and tie-down anchor points.
- Black, impact-resistant injected HDPE.
- LinQ base (715002350) is required for G2L.

Fits: G2L (front only for MAX models)

715003027

$159.99

RENEGADE

REAR BAG FOR RENEGADE 4.5 GAL (17L)

- Weatherproof, scratch-resistant, with a molded rubber bottom.
- Tool-less installation and removal.
- With 2 straps that go underneath the rack and click into the front of the bag.
- Requires Rear Aluminum Rack (715001360).

Fits: G2S

715002391

$179.99



WINDSHIELDS

OUTLANDER

CREATE YOUR ULTIMATE WIND PROTECTION IN 3 EASY STEPS

01 CHOOSE A DELUXE FAIRING COLOR

DELUXE FAIRING

- Innovative, richly-featured wind protection.
- Quick tool-less removal once base brackets are mounted on handlebar.
- 2 cup holders.
- GPS-mounting-kit-ready.
- Optional mirrors and auxiliary lighting.
- Requires low, high or extra high windshield (715001227, 715001211 or 715000936).
- Tapered Handlebar Adaptor Kit (715002470) is required for vehicles with 1 1/8" (28 mm) tapered aluminum handlebars.

Fits: G2 (except X mr), G2L

715000935 • Yellow
715001231 • Red
715001232 • Black
715002479 • Light Grey

$199.99



CAMO DECALS FOR BLACK DELUXE FAIRING

- Camo pattern perfectly matches your camo vehicle.

Fits: Deluxe Fairing

715002976
Mossy Oak Break-Up Country Camo
$44.99

715001684
Next G-1 Vista Camo
$44.99



Mossy Oak Break-Up Country



Next G-1 Vista

TAPERED HANDLEBAR ADAPTOR KIT

- Required to install Deluxe Fairing on a Renegade, on an Outlander X-TP and on any vehicle equiped with 1 1/8" (28 mm) tapered aluminum handlebars.

Fits: Deluxe Fairing

715002470
$24.99

02 CHOOSE A DELUXE WINDSHIELD



LOW WINDSHIELD

- 6" (15 cm) windshield allows you to keep your vehicle looking sporty while giving you some protection from the elements and the possibility of enjoying directional lighting.
- Tool-less installation and replacement.

Fits: Deluxe Fairing

715001227
$59.99



HIGH WINDSHIELD

- 11" (28 cm) high, for wind protection and winter applications.
- Tool-less installation and replacement.

Fits: Deluxe Fairing

715001211
$69.99



EXTRA HIGH WINDSHIELD

- 16" (41 cm) windshield provides the ultimate protection against the elements while touring.
- For wind protection and winter applications.
- Tool-less installation and replacement.

Fits: Deluxe Fairing

715000936
$94.99

03 YOU MIGHT ALSO LIKE...

AUXILIARY WINDSHIELD LIGHTING

- 2 premium LED spots for Deluxe Fairing for both increased output and directional lighting.

Fits: Deluxe Fairing

715001214
$309.99

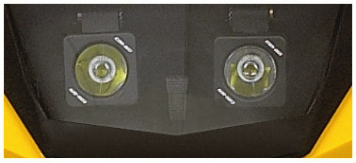

DELUXE MIRROR KIT

- Improved mounting system.
- Wide rear view.
- Perfect fit with your Deluxe Fairing and Deluxe Windshield.

Fits: Deluxe Fairing

715002353
$59.99





OUTLANDER RENEGADE

HIGH WINDSHIELD KIT

- Provides excellent wind protection.
- Fits straight and tapered handlebars.
- Easy mounting system allows you to install it effortlessly.

Fits: G2, G2L, G2S

715001937 • Yellow
715001938 • Black
715002061 • Red

$184.99



SPORT WINDSHIELD

- Offers your Renegade wind protection without compromising its sporty look.
- Fits straight and tapered handlebars.
- Easy mounting system allows you to install it effortlessly.

Fits: G2S

715001212 • Yellow
715001429 • White
715001468 • Black

$179.99



HANDLEBARS & MIRRORS

OUTLANDER RENEGADE



HANDLEBAR WIND DEFLECTORS

- Rugged injected plastic construction with Can-Am logo.
- Include removable cap for air flow adjustment.
- Mounting kit sold separately (715001378, 715001379).

Fits: G2, G2L, G2S

715000525 • Black / Yellow
715000537 • White / Black
715001706 • Black / Black
715000733 • Yellow / Black
715003811 - Can-Am Red / Black
715003812 - Manta Green / Black
715003813 - Orange / Black
715003814 - Octane Blue / Black

$24.99



PASSENGER WIND DEFLECTORS

- These wind deflectors fit on the passenger handles and provide greater comfort while riding.
- Easy to install and remove.

Fits: G2 & G2L (MAX models only)

715001669

$79.99

FULL WRAP ALUMINUM MOUNTING KIT

- Lightweight black die cast aluminum construction.
- Includes complete hardware.
- Handlebar wind deflectors sold separately.

Fits: G2, G2L, G2S

715001378

$84.99



SHORT ALUMINUM MOUNTING KIT

- Lightweight black die cast aluminum construction.
- Includes complete hardware.
- Handlebar wind deflectors sold separately.

Fits: G2, G2L, G2S

715001379

$59.99





ALUMINUM TAPERED HANDLEBAR

- 7/8"- 1 1/8" (22 mm - 28 mm) tapered handlebar made of 6061-T6 aluminum.
- Includes all hardware, center steering foam and cover.

Fits: G2, G2L, G2S

715000550

$99.99





MIRROR KIT FOR HANDLEBAR WIND DEFLECTORS

- Do not fit with Full Wrap Aluminum Mounting Kit (715001378).
- Sold in pairs.

Fits: Handlebar Wind Deflectors

860200080

$24.99



XT HANDLEBAR PROTECTOR KIT

- Not compatible with Mud Strap (715003053).

Fits: G2, G2L

703100352 • Black

$74.99

MIRRORS

- True vision surface 5" x 3" (13 cm x 8 cm).
- Matte finish.
- Stem includes 3/8" (10 mm) thread.

Left - 3/8" (10 mm)

- Bracket (715000190) is required for installation on DS 450.
- Braket not required for installation on Outlander and Renegade.

709400406

$29.99

Right - 3/8" (10 mm)

- Bracket (715000190) required except for vehicles with right hand break.

709400523

$29.99





OUTLANDER RENEGADE



LinQ SYSTEM™

LinQ 4" (10 CM) RACK EXTENSION

- Fits front or rear.
- Strong and durable.
- Helps keep cargo securely in place.
- Easy and tool-less installation thanks to the LinQ System.
- Anti-corrosion coating with durable powder coat finish.
- LinQ Luggage Rack (715001734) is required for G2S.

Fits: G2, G2S

715001711 • Silver
715001665 • Black

$174.99

CATCH THE VIDEO AT STORE.CAN-AM.BRP.COM



LinQ SYSTEM™

LinQ 6" (15 CM) RACK EXTENSION

- Fits front or rear.
- Strong and durable.
- Helps keep cargo securely in place.
- Easy and tool-less installation thanks to the LinQ System.
- Anti-corrosion coating with durable powder coat finish.
- LinQ Luggage Rack (715001734) is required for G2S.

Fits: G2, G2S

715001712 • Silver
715001671 • Black

$184.99



OUTLANDER

5" (13 CM) RACK EXTENSION

- Fits front or rear.
- Made of carbon steel.
- Provides tie-down points to secure cargo on racks.
- Easy installation on tubular rack.
- Anti-corrosion coating with durable powder coat finish.

Fits: G2L

715001913

$104.99



8" (20 CM) RACK EXTENSION

- Fits front or rear.
- Made of carbon steel.
- Provides tie-down points to secure cargo on racks.
- Easy installation on tubular rack.
- Anti-corrosion coating with durable powder coat finish.

Fits: G2L

715001914

$119.99



RENEGADE

LinQ SYSTEM™

LinQ LUGGAGE RACK

- Bolt-on rack.
- Enables use of LinQ mounted accessories on the G2S.

Fits: G2S (except X mr models)

715001734

$239.99



REAR ALUMINUM RACK

- 30 lb (14 kg) capacity.
- Compact, lightweight aluminum construction.
- Engraved Can-Am logo.
- Stamped 5052 aluminum center plate.
- Easy to install.

Fits: G2S

715001360

$194.99





OUTLANDER

LinQ GUN BOOT RACK

(Not illustrated)

- This lightweight Gun Boot Rack can be mounted on either side of your Outlander using the tool-less LinQ System.
- For use with Gun Boot 6.0 Impact by Kolpin (715001419).

Fits: G2 (except MAX & 6x6 models)

715002112 • Black

$134.99

Fits: G2 (MAX models only)

715002113 • Black

$129.99



715001919

GUN BOOT RACK

- Made of steel.
- Designed for the tubular rack.
- For use with Gun Boot 6.0 Impact by Kolpin (715001419).
- Can be mounted to either side of the vehicle.

Fits: G2L (except MAX models)	Fits: G2L (MAX models only)
715001918	715001919
$114.99	$114.99

GEAR GRIPS BY KOLPIN

- Durable, flexible grips cushion and protect while providing a custom fit for a variety of items from 1" to 4" (2.5 cm to 10 cm) in diameter.
- Heavy-duty design for carrying bows, fishing poles, rakes, farm tools and more.
- Quick-release button opens grip quickly for easy access to gear.
- Heavy-duty base system built for the toughest adventures.
- Sold in pairs.
- Easy installation on tubular racks, extension racks, brackets or bumpers.

Fits: G2L

715001421

$69.99





GUN BOOT 6.0 IMPACT† BY KOLPIN†

- Extra room for pistol-grip-type weapons and small bipods.
- Easily fits firearms up to 51" (130 cm) in total length.
- Provides ample room for 2 3/8" (60 mm) scopes.
- Hatchback design allows easy access.
- Ergonomically designed handle and molded attachment points for sling.
- Snap-close cover with locking capability.
- Designed to accommodate left and right hand bolt-action rifles and shotguns.
- Includes removable, shock absorbing foam and nylon impact liner for superior interior protection.
- Requires appropriate mounting kit for installation (715002112, 715002113, 715001918 or 715001919).

715001419

$79.99

MULTI-FIT HOLDER

- Open u-shaped bracket for carrying tools (shovel, axe) and hunting weapons (rifle, bow) that are safely secured, but easily accessible.
- Easy installation on tubular rack, extension racks, basket or bumpers.
- Sold in pairs.

Fits: G2, G2L Single	Fits: G2, G2L Double
715002354	715001945
$49.99	$69.99



OUTLANDER RENEGADE

LinQ MOUNTED GEAR GRIPS BY KOLPIN

(Not illustrated)

- Same features as Gear Grip by Koplin (715001421).
- Make transporting your tools a snap by combining the Gear Grips with the LinQ System.
- 360° orientation.
- LinQ Luggage Rack (715001734) is required for G2S.

Fits: G2, G2S

715001351

$104.99

LinQ TOOL HOLDER

- Ultra-versatile tool holder.
- Convenient swivel-latch allows tools to be stored in any orientation.
- LinQ Luggage Rack (715001734) is required for G2S.
- Sold in pairs.

Fits: G2, G2S

715003059

$49.99



SKID PLATES

OUTLANDER

ALUMINUM SKID PLATES

Our Aluminum Plates are made with high strength 5052 H32 aluminum.
A must-have for rugged terrain.

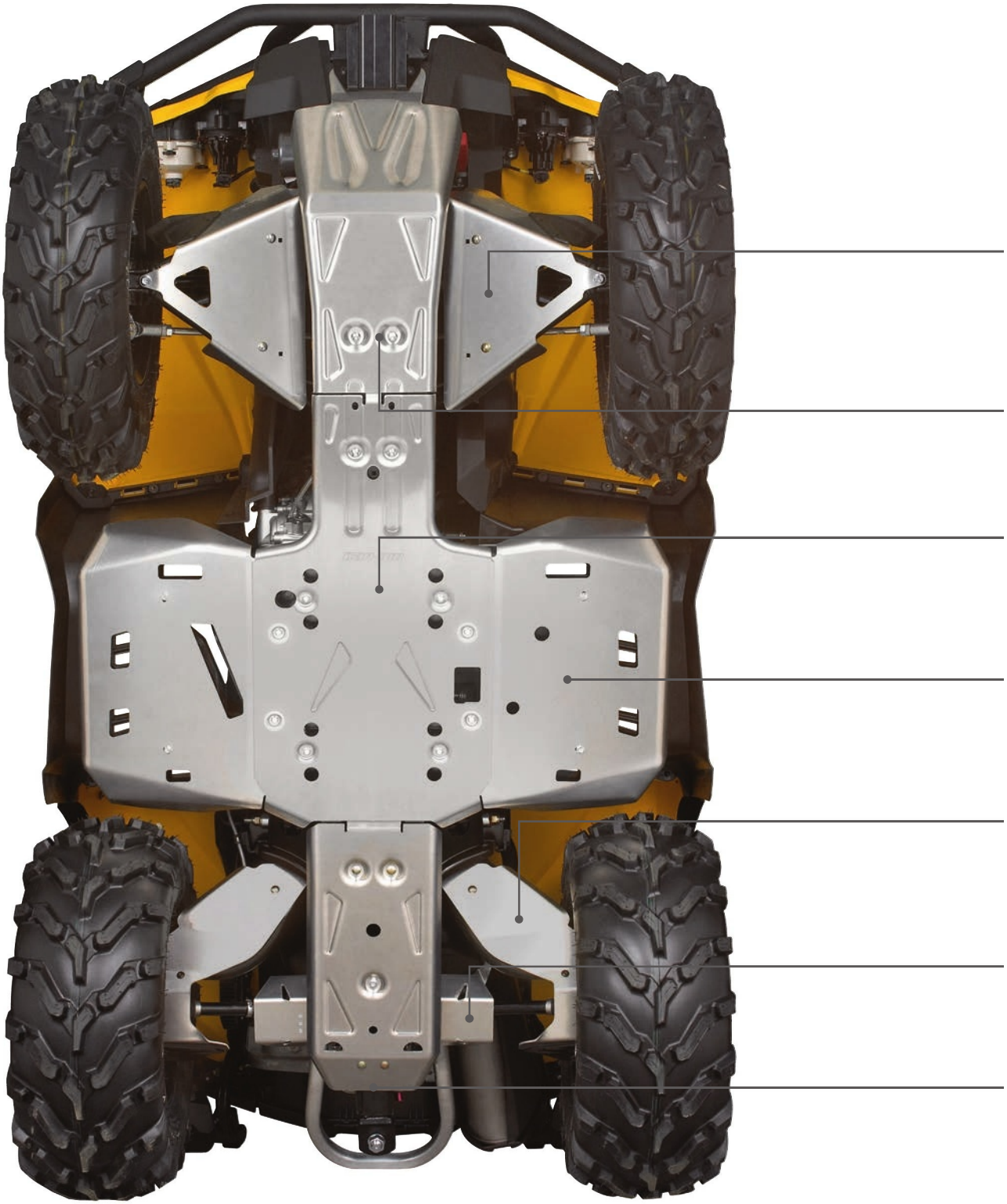

FIND YOUR PLATFORM

G2 (EXCEPT MAX MODELS)	G2 (MAX MODELS & OUTLANDER X MR 1000 ONLY)	G2L (EXCEPT MAX MODELS)	G2L (MAX MODELS ONLY)	G2 (6X6 ONLY)

ALUMINUM SKID PLATE PROTECTION KIT

INCLUDES:
- Front Skid Plate
- Rear Differential Protectors
- A-Arm Protectors
- Rear Skid Plate
- Central Skid Plate
- Trailing Arm Protectors (not included for Outlander L and Outlander L MAX)
- Footwell Protector Plates

715002137* $649.93	715002138* $679.93	715002299 $579.94	715002300 $594.94	

* Fits: 2016 & prior models

INDIVIDUAL ALUMINUM SKID PLATES

A-ARM PROTECTORS

- 1/8" (3 mm) thick lightweight and durable design.
- Add more protection to the CV joints and rubber boots.
- Drain holes to release water, mud and debris.
- Easy to install.
- Replace stock plastic protectors.
- Can-Am logo.
- Sold in pairs.
- Except X mr

715001667 $119.99	715001667 $119.99	715001667 $119.99	715001667 $119.99	715001667 $119.99

FRONT SKID PLATE

- 3/16" (4.5 mm) thick and die-formed for strength and durability.
- Use in conjunction with the central skid plate for full frame protection.

715000926 $69.99	715000926 $69.99	715001906 $94.99	715001906 $94.99	

CENTRAL SKID PLATE

- 3/16" (4.5 mm) thick for durability and strength.
- Drain holes to release water, mud and debris.
- Allows access to oil drain plug.
- Can-Am Logo.
- Must be installed with front skid plate.

715002078 $94.99	715002078 $94.99	715002078 $94.99	715002078 $94.99	

FOOTWELL PROTECTOR PLATES

- 1/8" (3 mm) thick lightweight and durable design.
- Use in conjunction with the central skid plate.
- Drain holes to release water, mud and debris.
- Sold in pairs.

715000922 $124.99	715000922 $124.99	715000922 $124.99	715000922 $124.99	

TRAILING ARM PROTECTORS

- 1/8" (3 mm) thick lightweight and durable design.
- Replace stock plastic protectors.
- Can-Am logo.
- Sold in pairs.
- Fits: G2 2016 & prior.

715001129 $109.99	715001129 $109.99			715001129 $109.99

REAR DIFFERENTIAL PROTECTORS

- 1/8" (3 mm) thick lightweight and durable design.
- Replace stock plastic protector.

715000920 $59.99	715000920 $59.99	715000920 $59.99	715000920 $59.99	

REAR SKID PLATE

- 3/16" (4.5 mm) thick for durability and strength.
- Must be installed with the central and front skid plates.

715002028 $84.99	715002029 $99.99	715002028 $84.99	715002029 $99.99	

RENEGADE

ALUMINUM SKID PLATES

Our Aluminum Plates are made with high strength 5052 H32 aluminum. A must-have for rugged terrain.

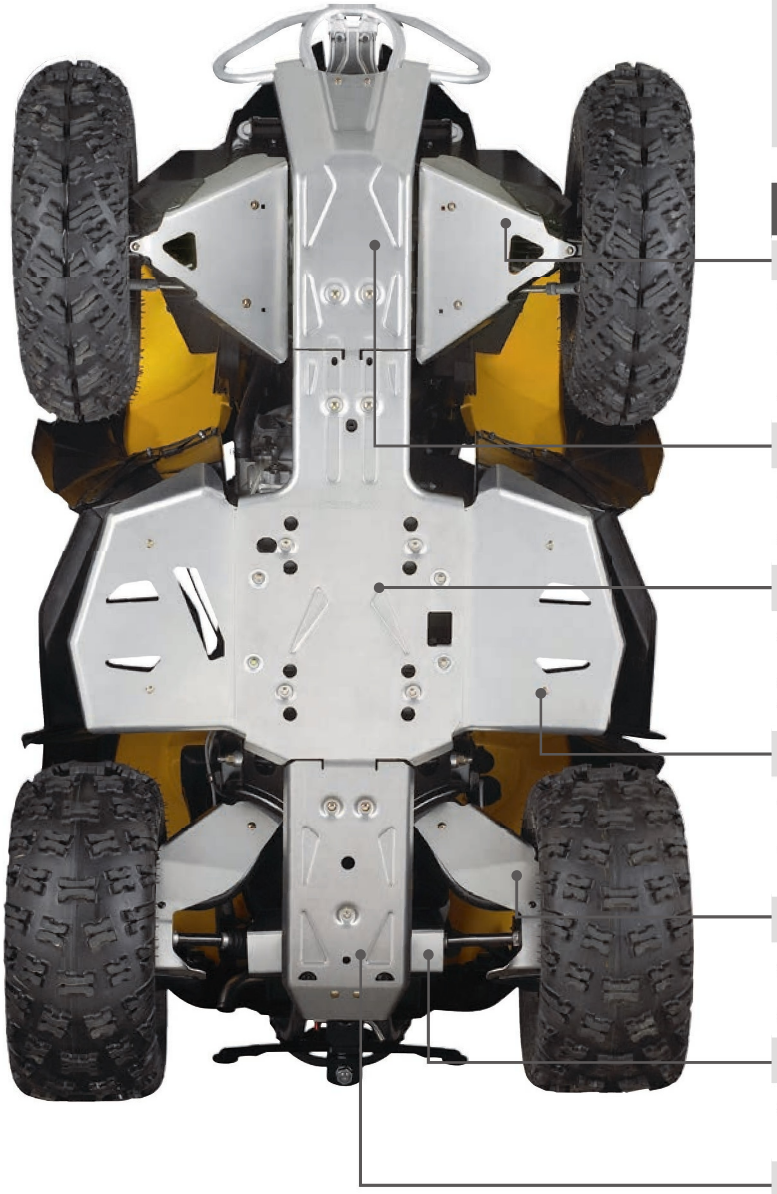

G2S

ALUMINUM SKID PLATE PROTECTION KIT

INCLUDES:
- Front Skid Plate
- Central Skid Plate
- Rear Differential Protectors
- Trailing Arm Protectors
- A-Arm Protectors
- Footwell Protector Plates
- Rear Skid Plate

Fits: 2016 & prior

715002139
$669.93

INDIVIDUAL ALUMINUM SKID PLATES

A-ARM PROTECTORS

- 1/8" (3 mm) thick lightweight and durable design.
- Add more protection to the CV joints and rubber boots.
- Drain holes to release water, mud and debris.
- Easy to install.
- Replace stock plastic protectors.
- Can-Am logo.
- Sold in pairs.

715001667
$119.99

FRONT SKID PLATE

- 3/16" (4.5 mm) thick and die-formed for strength and durability.
- Recessed bolt holes.
- Can-Am logo.

715000925
$69.99

CENTRAL SKID PLATE

- 3/16" (4.5 mm) thick for durability and strength.
- Drain holes to release water, mud and debris.
- Allows access to oil drain plug.
- Can-Am logo.
- Standard on Renegade X xc.
- Must be installed with Front Skid Plate.

715002078
$94.99

FOOTWELL PROTECTOR PLATES

- 1/8" (3 mm) thick lightweight and durable design.
- Drain holes to release water, mud and debris.
- Use in conjunction with Central Skid Plate.
- Sold in pairs.

715001359
$144.99

TRAILING ARM PROTECTORS

- 1/8" (3 mm) thick lightweight and durable design.
- Replace stock plastic protectors.
- Can-Am logo.
- Sold in pairs.
- Fits: G2S 2016 & prior.

715001129
$109.99

REAR DIFFERENTIAL PROTECTORS

- 1/8" (3 mm) thick lightweight and durable design.
- Replace stock plastic protector.

715000920
$59.99

REAR SKID PLATE

- 3/16" (4.5 mm) thick for durability and strength.
- Must be installed with the central and front skid plates.

715002028
$84.99

OUTLANDER RENEGADE

HMWPE SKID PLATES

Our Plastic Plates glide smoothly and silently over obstacles, offering great protection in rough terrain. Made of 1/4" (6 mm) thick abrasion-resistant thermoformed High Molecular Weight Polyethylene (HMWPE). Lighter than aluminum. Cold cracking resistant. High impact energy absorbtion.

CATCH THE VIDEO AT STORE.CAN-AM.BRP.COM

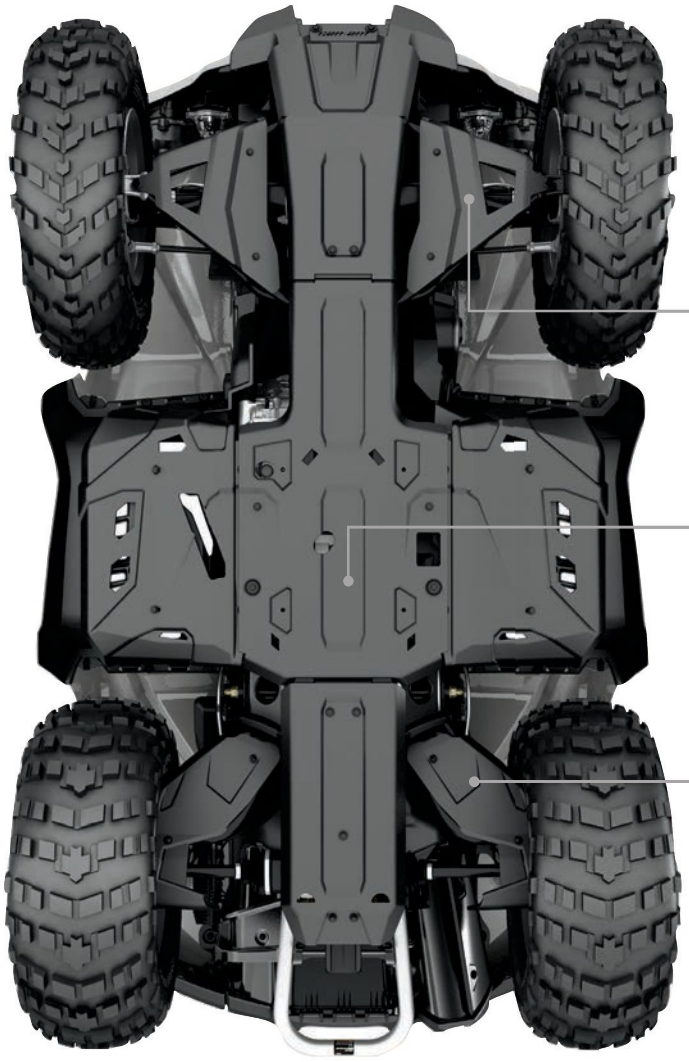

FIND YOUR PLATFORM

G2 2017	G2 2016 & PRIOR	G2 MAX 2017	G2 MAX 2016 & PRIOR	G2L	G2L MAX	G2S 2017

HMWPE PLASTIC SKID PLATE PROTECTION KIT

INCLUDES: • A-Arm Protectors • Underbelly plates • Trailing Arm Protectors

G2 2017	G2 2016 & PRIOR	G2 MAX 2017	G2 MAX 2016 & PRIOR	G2L	G2L MAX	G2S 2017
NEW 715004209 $639.99	NEW 715004214 $639.99	NEW 715004210 $659.99	NEW 715004215 $659.99	NEW 715004211 $639.99	NEW 715004212 $659.99	NEW 715004213 $639.99

INDIVIDUAL HMWPE PLASTIC SKID PLATES

A-ARM PROTECTORS

- Protect CV joints and rubber boots.
- Include water and mud drainage holes.
- Can-Am logo.
- Sold in pairs.

G2 2017	G2 2016 & PRIOR	G2 MAX 2017	G2 MAX 2016 & PRIOR	G2L	G2L MAX	G2S 2017
715002924 $109.99	715002924 $109.99	715002924 $109.99	715002924 $109.99	715002924 $109.99	715002924 $109.99	715002924 $109.99

UNDERBELLY PLATES

- Includes Front Skid Plate, Central Skid Plate, Footwell Protector Plates and Rear Skid Plate.
- Allows access to oil drain plug.
- Include water and mud drainage holes.
- Can-Am logo.

G2 2017	G2 2016 & PRIOR	G2 MAX 2017	G2 MAX 2016 & PRIOR	G2L	G2L MAX	G2S 2017
715002926 $419.99	715002926 $419.99	715002927 $439.99	715002927 $439.99	NEW 715002928 $419.99	NEW 715002929 $439.99	NEW 715002974 $419.99

TRAILING ARM PROTECTORS

- Include water and mud drainage holes.
- Sold in pairs.

G2 2017	G2 2016 & PRIOR	G2 MAX 2017	G2 MAX 2016 & PRIOR	G2L	G2L MAX	G2S 2017
NEW 715003466 $109.99	715002925 $109.99	NEW 715003466 $109.99	715002925 $109.99	NEW 715003466 $109.99	NEW 715003466 $109.99	NEW 715003466 $109.99

PLASTIC SKID PLATES

FRONT AND CENTRAL PLASTIC SKID PLATES

(Not illustrated)
- Designed to protect frame and engine from rough terrain conditions.
- Standard on Outlander L DPS® and Outlander L MAX DPS.

Fits: G2L (STD only)
715002374
$49.99

BUMPERS



OUTLANDER

CATCH THE VIDEO AT STORE.CAN-AM.BRP.COM

NEW

COMPLETE RANCHER PROTECTION KIT

(Not illustrated)

- Introducing a whole new level of surround protection for your ATV thanks to this Full Body Protection Kit that includes a Rancher Front Bumper (715003461), Rancher Rear Bumper (715003462), and Body Side Protector (715003459).
- Requires Body Side Protector Extensions (715003460) for installation on MAX models.

Fits: G2, G2L

715003463

$789.99

NEW

BODY SIDE PROTECTOR EXTENSIONS

(Not illustrated)

- This specially designed extension for Body Side Protector (715003459 or 715003614) is made specifically to fit and seamlessly integrate the look of Outlander MAX models.

Fits: G2, G2L (MAX models only)

715003460

$59.99



NEW

RANCHER REAR BUMPER

- The heavy-duty bumper designed to pull double duty: protect your ATV and anything it comes in contact with, while also enhancing the look of your ATV.
- Made tough and designed to deliver a rugged appearance, this bumper offers rear protection for farmer, rancher and forestry applications.
- Ideal for using your ATV within cattle herds and guard the safety of both the vehicle and the animals.
- Coverage extends to provide an extra layer of defense to your tail lights.
- Inside and outside anti-corrosion coating with durable powder coat finish.
- Not compatible with track systems.

Fits: G2, G2L

715003462

$229.99



NEW

BODY SIDE PROTECTOR

- The heavy-duty fender guard designed to pull double duty: protect your ATV and also enhance the look of your ATV.
- Made tough and designed to deliver a rugged appearance, this fender guard offers full side protection for farmer, rancher and forestry applications.
- Built of durably bold 1.25" (3 cm) diameter steel-tube construction, with inside and outside anti-corrosion coating with durable powder coat finish.
- XT Front Bumper, XT Rear Bumper, Rancher Front Bumper or Rancher Rear Bumper required for installation.
- Sold in pairs.

Fits: G2 with XT or Rancher Bumpers, G2L with Rancher Bumpers

- Requires Body Side Protector Extensions (715003460) for installation on MAX models.

715003459

$289.99

Fits: G2L with XT Bumpers

715003614

$319.99



NEW

RANCHER FRONT BUMPER

- The heavy-duty bumper designed to pull double duty: protect your ATV and anything it comes in contact with, while also enhancing the look of your ATV.
- Made tough and designed to deliver a rugged appearance, this bumper offers front protection for farmer, rancher and forestry applications.
- The low front end protection and plates allow you to use your ATV within cattle herds and guard the safety of both the vehicle and the animals.
- The flat front portion facilitates gently prodding cattle or pushing light objects, e.g. closing a fence.
- The full frontage coverage extends to provide an extra layer of defense to your headlights and radiator.
- Inside and outside anti-corrosion coating with durable powder coat finish.
- Not compatible with track systems and plows.

Fits: G2, G2L

715003461

$269.99

OUTLANDER



XT FRONT BUMPER

- Provides additional protection against the elements.
- Tough and durable, can be added on base Outlander model to convert vehicle into XT model.
- Large tube construction with textured black finish.
- Standard on XT model.

Fits: G2

715000947

$164.99



XT FRONT BUMPER

- Large tube construction.
- Protects vehicle frame against obstacles.
- Winch compatible.

Fits: G2L

715001910

$134.99



EXTREME FRONT BUMPER

- Ultra-sturdy build.
- Enhances front-vehicle protection.
- Compatible with XT Front Bumper.
- Fits the Apache 360 Track System (when side panels are removed).

Fits: G2

715001286

$239.99



EXTREME FRONT BUMPER

- Ultra-sturdy build.
- Enhances front-vehicle protection.
- Compatible with XT Front Bumper.
- Fits the Apache 360 Track System (when side panels are removed).

Fits: G2L

715004279

$224.99



XT REAR BUMPER

- Provides additional protection against the elements.
- Tough and durable, can be added on base Outlander model to convert vehicle into XT model.
- Large tube construction with textured black finish.
- Standard on XT model.

Fits: G2

715000948

$154.99



XT REAR BUMPER

- Large tube construction.
- Protects vehicle frame against the obstacles.

Fits: G2L

715001911

$104.99

RENEGADE

RENEGADE EXTREME FRONT BUMPER

- Enhanced vehicle front protection.
- Required as a mounting point for Radiator Relocator (715001929).

Fits: G2S

715002469

$214.99





OUTLANDER RENEGADE

CATCH THE VIDEO AT STORE.CAN-AM.BRP.COM

LinQ SYSTEM

NEW

LinQ 11.5 GAL (43L) AUDIO CARGO BOX

- Delivers the best sound quality on the market to sweeten your ride courtesy of a built-in full range high efficiency amplifier.
- Mounts on/off easily to hold/carry cargo safely and securely.
- The Bluetooth enabled receiver and 6.5" speakers are smartly concealed and integrated in the cover.
- Automatic shut-off function protects your battery by turning the system off after 10 minutes of inactivity.
- Backlit control panel perfect for night riding.
- LinQ Base (715002350) is required for G2L.
- LinQ Luggage Rack (715001734) is required for G2S.

Fits: G2 (front only for 6x6 & MAX models 2013-2014), G2L, G2S

715003018

$549.99



MUST HAVE

OUTLANDER RENEGADE

HEATED HAND GRIPS & THROTTLE COMBO

Fits: G2, G2L (Wiring Cable (710004567) required for installation), G2S

715001849

$174.99

NEW 715003250

$229.99

MUST HAVE

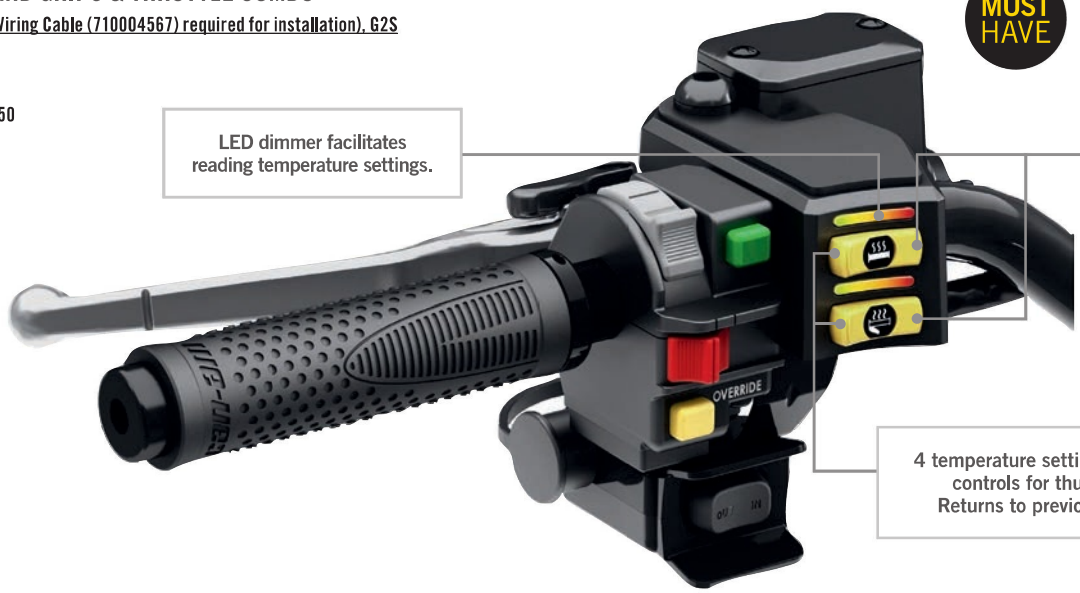



THERE'S MUCH MORE TO SEE – CHECK OUT THE CYCLOPS 360 ON PAGE 192

CGX2 CAMERA

- 4K HD and 1080p at 60fps.
- 2" LCD display screen.
- Waterproof housing of up to 165 ft (50 m) underwater and the 2.4gh waterproof remote.
- Comes with 32gb micro SD card class 10 and 9 mounts.
- WIFI available to control your camera from your smart phone or tablet with the free iCyclops App for IOS and Android.

2866860090

$299.99

OUTLANDER

HEATED PASSENGER GRIPS & VISOR OUTLET

- Replace your stock passenger handles.
- Dual temperature switch integrated into seat arm for 3-zone heated handles and grips.
- Heated visor outlet integrated into seat arm.

Fits: G2, G2L (MAX models only)

715001926

$209.99

Fits: G2 (2013-2014) (MAX models only)

715002116

$209.99



HEATED VISOR OUTLET

- Strategically positioned on vehicle to maintain your agility.
- Optional visor outlet that delivers fog-free riding.
- Quick and easy installation.
- Sold individually.
- Heated Visor not included.

Fits: G2, G2L

715001246

$49.99



WIRING CABLE

- Required for installation of Heated Hand Grips & Throttle Combo (715001849).

Fits: G2L

710004567

$9.99



DPS MODULE

(Not illustrated)

Fits: G2L (except base models), G2 (except base models)

715001202

$179.99

OUTLANDER RENEGADE

FRONT BUMPER LIGHTS

- 2 x 900 lumens 10W LED Cree light kit.
- Long-range illumination up to 350' (107 m), drawing less than 1 amp per light.
- Include multi-position clamps that fit on various tubing sizes.
- Not EC compliant.

Fits: G2, G2L

715001741

$259.99



AUXILIARY WINDSHIELD LIGHTING

- 2 premium LED spots for Deluxe Fairing for both increased output and directional lighting.
- 1,800 lumens.
- 2 10W LED Cree light kit.
- Long-range illumination up to 350' (107 m), drawing less than 1 amp per light.

Fits: Deluxe fairing

715001214

$309.99

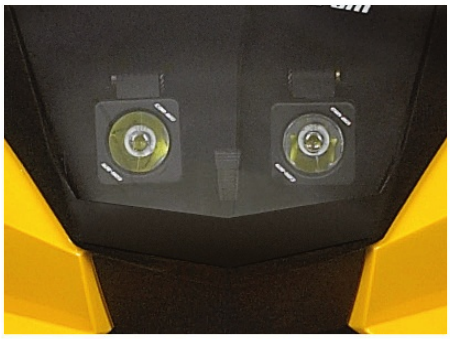

NEW

RAM LED SPOTLIGHT

- 540 lumens LED light (9 Watt) heavy-duty spotlight standard-equipped with 1" (2.5 cm) diameter rubber-coated double ball and socket system.

710005423 • Black

$119.99



CENTER CONSOLE DAY LIGHT

- Mountable on top end of center console.
- Enhances look of vehicle.

Fits: G2S

715000691

$59.99





NEW

GARMIN† MONTANA† 680T GPS

- Rugged and waterproof, the Montana 680T is element-proof.
- 4-inch dual-orientation, sunlight-readable touchscreen and glove-friendly touchscreen display, to give you vivid colors and high-resolution images.
- 8-megapixel autofocus camera automatically geotags photos.
- Tracks both GPS and GLONASS satellites for improved positioning and typically faster fixes.
- Preloaded TOPO maps, plus 1-year BirdsEye Satellite Imagery subscription.
- 3-axis compass with barometric altimeter.
- Specific GPS cradle included (vehicle mounting kit required).
- Includes a preloaded map for US.

Fits: G2, G2L, G2S

715002830

$659.99

EUROPEAN VERSION

- EC compliant.
- Includes preloaded European recreation map.

715003456

NEW

CANADIAN MAP FOR GARMIN MONTANA 680T GPS

- Additional and readily-programmable Canadian basemap for Garmin Montana 680T GPS system.
- Requires Garmin Montana 680T GPS (715002830).

710005065

$129.99



GPS RAM®MOUNT FOR HANDLEBAR

- Convenient bracket for installing the Garmin Montana GPS (not included) onto your unit's handlebar.

Fits: G2, G2L, G2S

715001985

$59.99

OUTLANDER

CAN-AM TERRA BY SUPERWINCH†

- Heavy-duty 4-way roller fairlead.
- Ergonomic clutch handle.
- Rugged all-steel gears and bushings, provides more torque and longer life.
- 100% mechanical load holding brake and electronic dynamic brake.
- Sealed solenoid for all weather protection.
- Corded 10' (3m) weather sealed hand-held remote.
- Weather sealed handlebar mounted switch.
- EC Compliant.



CAN-AM TERRA 35 WINCH BY SUPERWINCH

- Pulling strength capability of 3,500 lb (1,588 kg).
- 50 ft. of 13/64" (15.2 m of 5.2 mm) wire steel cable.

Fits: G2, G2L

715003476

$359.99



CAN-AM TERRA 25 WINCH BY SUPERWINCH

- Pulling strength capability of 2,500 lb (1,134 kg).
- 50 ft. of 3/16" (15.2 m of 4.8 mm) wire steel cable.

Fits: G2, G2L

715003475

$319.99

OUTLANDER RENEGADE

WARN† PROVANTAGE

- Patented roller disc brake for outstanding control while winching.
- Ergonomic clutch handle.
- Three-stage planetary gear train for smooth, efficient operation.
- All-metal gear housing and gears.
- Fully sealed motor and drive train to keep the elements out.
- Corded remote and mini-rocker control switch with integrated socket.
- Limited lifetime warranty for mechanical components and 3-year warranty for electrical components.
- Winch mounting plate (715000927) is required for G2S.
- Winch wire harness (715002453) is required for G2L.
- EC Compliant.



WARN PROVANTAGE 3500-S WINCH

- Double powder coated hawse fairlead.
- Pulling strength capability of 3,500 lb (1,588 kg).
- 50 ft. of 3/16" (15.2 m of 4.8 mm) synthetic rope.

Fits: G2, G2L, G2S

715003473

$679.99



WARN PROVANTAGE 3000 WINCH

- Roller fairlead.
- Pulling strength capability of 3,000 lb (1,361 kg).
- 50 ft. of 3/16" (15.2 m of 4.8 mm) wire steel cable.

Fits: G2, G2L, G2S

715003474

$549.99



WARN PROVANTAGE 2500-S WINCH

- Double powder coated hawse fairlead.
- Pulling strength capability of 2,500 lb (1,134 kg).
- 50 ft. of 3/16" (15.2 m of 4.8 mm) synthetic rope.

Fits: G2, G2L, G2S

715003472

$579.99

OUTLANDER RENEGADE

WINCH MOUNTING PLATE



- Adds functionality to your Renegade.
- Fits Can-Am winches by Warn.

Fits: G2S

715000927

$109.99

WIRELESS REMOTE CONTROL



- The system is quick and easy to install, thanks to a wiring harness with an integrated antenna and all necessary mounting hardware.
- The system allows you to operate your winch from anywhere within a 50' (15.2 m) radius, increasing your recovery options.
- All components are weatherproof.

Fits: Warn winches

715002542

$179.99

WIRED REMOTE CONTROL



- This kit allows winch owners to add the hand-held remote to their winch.
- Works in conjunction with the mini-rocker switch.

Fits: 2016 models & prior

710002270

Fits: G2, G2S, G2L

- Remote socket (715003651) is required.

710001002

$59.99

WARN REMOTE SOCKET

(Not illustrated)

715003651

$24.99

WINCH WIRE HARNESS

(Not illustrated)

- Required plug-and-go wiring to install Warn winch only.
- Not required for Can-Am Terra winch.

Fits: G2L

715002453

$39.99

HARDWARE ADAPTER KIT

(Not illustrated)

- Required to install Warn Winch Kit (715002500, 715002561, 715002499) on 2016 & up models.
- Required to install Can-Am Terra 25 Winch (715002167) and Can-Am Terra 35 Winch (715002057) on G2L 2017 & up models.

715003477

$29.99

WINCH ACCESSORIES KIT



- Get the most out of your winch.
- Double your pulling power, change your pulling direction and keep your winch in proper working order.
- Includes tree straps, snatch block, shackle and winching gloves.

715002409

$104.99

SYNTHETIC WINCH CABLE



- Easier to manipulate than steel cable.
- Replaces the original cable on any factory installed Warn winch or sold as an accessory by BRP.
- Kit includes synthetic rope and rock guard sleeve.
- Always use with new Roller Fairlead (715000011) to prevent premature wear.

50' (15.2 m), 3,500 lb (1,588 kg) pulling strength

715000539

$114.99

REPLACEMENT WIRE ROPE



- Play it safe, always carry a replacement wire rope.
- 50' (15.2 m) aircraft grade steel wire.
- 3/16" (4.8 mm) diameter.
- 3,500 lb (1.588 kg) pulling strength.

Fits: All Warn winches

715000047

$59.99

ROLLER FAIRLEAD



- Features top, bottom and side rollers for less cable wear and smoother operation from any direction for easier winching.

715000011

$59.99

HOOK WITH SAFETY LATCH & STRAP KIT



- Heavy-duty winch-rope hook with stainless steel snap.
- Includes a nylon safety strap.

715000069

$17.99



OUTLANDER



FRONT HITCH

- Front hitch for Outlander with or without a winch.
- This hitch offers 1,300 lb (590 kg) of towing capacity.
- Allows you to maneuver your trailer easily in tight, confined areas.
- Hitch bar sold separately.

Fits: G2

715000921

$84.99

OUTLANDER RENEGADE



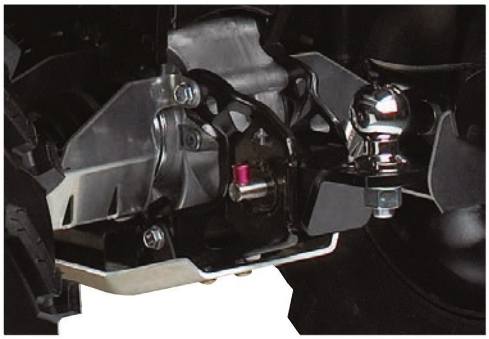

FRONT & REAR HITCH DRAWBAR

- Fits 2" (5 cm) receiver hitch that comes standard on Outlanders.
- Hitch ball not included.
- This hitch offers 1,300 lb (590 kg) of towing capacity.

Fits: G2, G2L, G2S

715000972

$79.99

EUROPEAN VERSION

715001473 • Drawbar with 50mm European ball

REAR RECEIVER HITCH

- E-coat finish.
- Does not affect ground clearance.
- Trailer ball not included.
- This hitch offers 1,300 lb (590 kg) of towing capacity.

Fits: G2L, G2S

715001329

$84.99



REAR RECEIVER HITCH

- E-coat finish.
- Fixed hitch ball mounting bracket.
- Provides fixed mounting point for trailer ball to provide vehicle with towing capabilities.
- This hitch offers 1,300 lb (590 kg) of towing capacity.

Fits: G2, G2L, G2S

715001925

$49.99



RUBBER RECEIVER PLUG

- Rubber cap for 2" (5 cm) hitch receiver.

705204503

$10.99





OUTLANDER



OUTLANDER RADIATOR RELOCATOR KIT

- Relocates radiator to top mount position.
- Prevents cooling performance loss in muddy conditions.
- Uses existing radiator.
- Includes support, hardware and hoses.
- Engineered for easy cooling system bleeding and maintenance.
- Radiator not included.

Fits: G2, G2L

715001930 • Black

$379.99



OUTLANDER SNORKEL KIT

- Comprehensive kit.
- Extended air intakes and CVT exhaust.
- CVT Outlet integrates into pod cover.
- Ideal for muddy conditions.
- Must be installed on a vehicle without XT handlebar protector kit.
- For 6x6, appropriate gauge support is required for best fit and finish.

Fits: G2, G2L

715002392

$359.99

Fits: G2 (X mr models only), G2L (X mr models only)

- Raised horn only.
- Provides higher intake.
- For best fit and finish, appropriate gauge support is required.

715002518

$89.99

Fits: G2 (2012-2014 only)

715001730

$359.99



X MR TRACTION PLATES

- Provide extra foot grip for driver when riding in extreme mud conditions.
- Help driver to maintain ideal riding position to maximize vehicle traction.
- Made of aluminum.
- Not meant for a passenger.

Fits: G2, G2L (MAX models only)

715001752 • Aluminum

$99.99

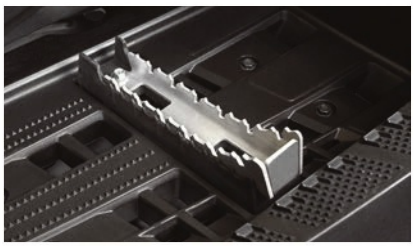

FOOTPEG KIT

- Provides maximum integrated grip and more stability during vigorous riding.
- Kick-up end generates added grip during hard cornering.
- Made of aluminum.
- Sold in pairs.

Fits: G2, G2L

715001131

$44.99

OUTLANDER RENEGADE



MUD STRAP

- Convenient sturdy grab-handle.
- Lets drivers redistribute their weight for improved traction in demanding conditions.
- Not compatible with XT Handlebar Protector Kit (703100352).

Fits: G2, G2L, G2S

715003053

$39.99

RENEGADE



RENEGADE SNORKEL KIT

- Comprehensive kit.
- Extended air intakes and CVT exhaust.
- CVT Outlet integrates into pod cover.
- Ideal for muddy conditions.

Fits: G2S

715001928

$449.99

ADAPTOR KIT

(Not illustrated)

- Necessary to install the G2S Snorkel Kit (715001928) on 2012 to 2014 models.

Fits: G2S (for 2012-2014 models only)

715003122

$44.99



RENEGADE RADIATOR RELOCATOR KIT

- Relocates radiator to top mount position.
- Prevents cooling performance loss in muddy conditions.
- Uses existing radiator.
- Includes support, hardware and hoses.
- Engineered for easy cooling system bleeding and maintenance.
- Radiator not included.
- Renegade Extreme Front Bumper (715002469) required for installation (except X mr).

Fits: G2S

715001929

$379.99

OUTLANDER

FENDER FLARE

- Kit designed to deliver extra protection from dirt and debris, therefore a must if you enjoy riding in the mud.
- Made of injected plastic that hugs your vehicle fenders perfectly.
- Gives vehicle added flair for that rugged cool look.
- Includes front and rear extensions and all mounting hardware.

Fits: G2 (except X mr 850 & 1000R)

715001764

Fits: G2L

715001909

Fits: G2 (X mr models only)

715004250

$129.99



NEW

FENDER FLARE EXTENSIONS

- Block terrain debris from kicking up onto you as you ride or damaging your vehicle thanks to these extra-large Fender Flare Extensions, which also include mud flaps for added protection from mud/snow, especially when riding with track kits.
- Made of High Molecular Weight Polyethylene (HMWPE) for advanced abrasion resistance.
- Include front and rear extensions.

Fits: G2

- Must be used with Fender Flare for G2 (715001764).

715003458

$199.99

Fits: G2L

- Must be used with Fender Flare for G2L (715001909).

715003615

$199.99



RENEGADE



FENDER FLARE

- Integrated extended Fender Flare for sporty look and full body protection from dirt and water.
- Includes front and rear extensions and all mounting hardware.

Fits: G2S (except X mr models)

715001681

$169.99



OUTLANDER



YOSHIMURA can-am

YOSHIMURA SLIP-ON EXHAUST

- Made from 304-grade stainless steel.
- Better sounding, better looking and lighter than stock muffler.
- USDF/USDA approved spark arrester.
- NON EPA compliant (for racing application only).
- Not EC compliant.
- Fuel injection system tuning not required.

Fits: G2 (except 6x6 models)

715001738

$429.99

RENEGADE



YOSHIMURA can-am

YOSHIMURA SLIP-ON EXHAUST

- Made from 304-grade stainless steel.
- Better sounding, better looking and lighter than stock muffler.
- USDF/USDA approved spark arrester.
- NON EPA compliant (for racing application only).
- Not EC compliant.
- Fuel injection system tuning not required.

Fits: G2S (except X mr models)

715001739

$529.99

CATCH THE VIDEO AT STORE.CAN-AM.BRP.COM

OUTLANDER

OUTLANDER MAX PASSENGER SEAT KIT

- Perfect to replace used or damaged passenger seat.

Fits: G2 2015 & up, G2L (MAX models only)
715002373
$589.99

Fits: G2 2013-2014 (MAX models only except with 400 engine)
715002032
$589.99



OUTLANDER RENEGADE



FRONT SHOCK COVERS

- Feature ventilation holes.
- Offer added protection in rough terrain and weather conditions.
- Sold in pairs.

Fits: G2, G2L, G2S
715500301
$39.99

HEAVY-DUTY SPRINGS

- Heavy-duty springs provide enhanced stiffness.
- Perfect for snow clearing and hauling heavy loads.
- Improves handling and helps prevent accidental overturns.
- Sold in pairs.
- Standard on Outlander Pro & Mossy Oak models

Fits: G2

Front
G2 (base model, DPS, XT, X mr with 650 engine only & Limited), G2S (base model with 500 & 570 engines only)
715003199
$99.99


Front

Rear
G2 (base model, DPS, XT & X mr with 650 engine only), G2S (base model with 500 & 570 engines only)
715003200
$99.99


Rear

FOX PERFORMANCE SHOCKS 1.5 PODIUM X RC2 HPG

- High-performance front and rear shocks.
- Allow handling to readily adapt to terrain and riding style.
- Easy-adjust dual-speed compression, rebound and preload settings.
- Standard on X xc.

Fits: G2 (except with 400 engine, X mr, Limited, & 6x6), G2 X mr 650 & G2S (base model & X mr 570 only)
715003201
$1,999.99



RADIATOR PROTECTOR

- Metal shield which mounts over radiator face, providing protection from stones and branches.

Fits: G2, G2S (except Renegade with 500 engine)
715001744
$59.99

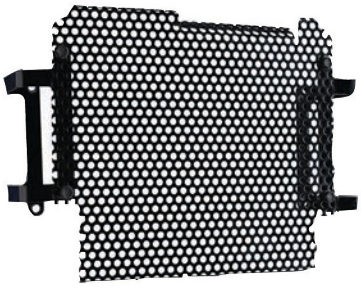

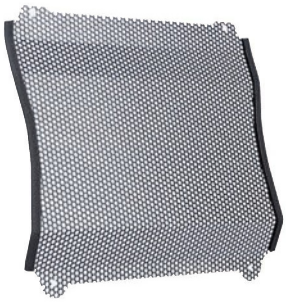

FOAM AIR FILTER BY TWINAIR†

- Maximizes performance by increasing air flow throughout RPM range.
- Maintenance-friendly, i.e. just wash, re-oil and re-use after riding in severely dusty/muddy environments.

Fits: G2, G2S
715001333
$69.99



FOX SHOCKS

- Engineered for the more agressive riders.
- Offers increased bump absorption and better roll control.
- Offers a slightly firmer ride than standard kits but remains very useable for all-around use.
- Kit includes 4 shocks and springs.
- Rebuildable.
- Threaded preload adjusters.

Fits: G2 (except with 400 engine, X mr, XT-P, Limited & 6x6), G2 X mr 650 & G2S (base model with 500 & 570 only)
715001471
$579.99



APACHE 360 TRACK SYSTEMS

BEST TRACK SYSTEM OF ITS KIND.



OUTLANDER RENEGADE

APACHE 360 TRACK SYSTEMS

- Highly engineered track system provides ultimate traction in snow and any other type of ground surface for your Can-Am vehicle.
- Front track design reduces vibration, eases turning and enhances performance in any hard packed conditions.
- The angled front lugs minimize resistance, and the way the lugs overlap over the wheels ensures smooth rolling.
- The rear track pattern and lug height are balanced for greater traction.
- Unique adjustable contact patch enables you to tackle the toughest conditions year round.
- This new system has two settings: the user can choose a better attack angle in rough terrain or greater flotation in deep snow.
- Thanks to the heightened rubber over molded heavy-duty double bearing wheels and offset wheel spacing, friction and vibration are reduced to a minimum while ensuring reliability.
- Easy installation and quick conversion from tires to tracks once the Apache 360 Mounting Kit is installed (sold separately).
- The DPS† module, included in the Apache 360 Mounting Kit, optimizes your Dynamic Power Steering (DPS) performance, maximizing steering agility at lower speeds while providing firmer steering at cruising speeds. It also provides a speed correction factor for the speedometer.
- EC compliant.

APACHE 360 TRACK SYSTEM

- Apache 360 Mounting Kit (715002388) is required (sold separately).

Fits: G2 (except 6x6 models), G2L, G2S

715001981

$3,799.99

APACHE 360 LT TRACK SYSTEM

- The Apache 360 LT Track System offers the same features and technology as the Apache 360 Track System, plus some specific design elements.
- Heavy-duty components ensure reliability and the design offers excellent acceleration, turning, braking and side-hilling performance.
- Larger contact patch than the Apache 360 Track System by 15 in² (97 cm²) at front and 41 in² (265 cm²) at back.
- Higher ground clearance than the Apache 360 Track System by 3/4" front and 1.25" rear.
- Higher rear angle of attack.
- Apache 360 Mounting Kit (715002388) and Apache 360 LT ATV Adaptor (715003063) are required (sold separately).

Fits: G2 (except 6x6 models), G2S

715003064

$4,699.99

APACHE 360 LT ATV ADAPTOR

(Not illustrated)

- Required to install an Apache 360 LT Track System (715003064).
- Apache 360 Mounting Kit (715002388) also required.

Fits: G2 (except 6x6 models), G2L, G2S

715003063

$149.99

APACHE 360 MOUNTING KIT

(Not illustrated)

- Simple system that reduces installation time.
- Includes DPS Module.
- Requires Apache 360 LT ATV Adaptor (715003063) for installation of the Apache 360 LT Track System.

Fits: G2 (except 6x6 models), G2L, G2S

715002388

$309.99

AIR INTAKE PRE-FILTER

- Adds extra protection for your engine in harsh riding conditions.
- Filter blocks particles larger than 0.005".
- A pre-filter is necessary to maintain the vehicle warranty when an Apache 360 Track System or an Apache 360 LT Track System is installed.

Fits: G2, G2L, G2S

715000291

$29.99



HIGHLY ENGINEERED TRACK DESIGN PROVIDES ULTIMATE TRACTION IN ANY TERRAIN AND LOWEST STEERING EFFORT.

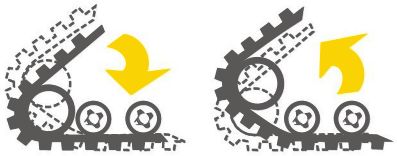

Unique adjustable contact patch system to tackle the toughest year-round conditions.



Easy installation and quick conversion from tires to tracks.

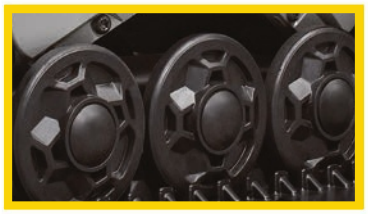

Rubber over molded heavy-duty double bearing wheels and offset wheel spacing reduce friction and vibration while ensuring reliability.


Can-am
OUTLANDER L

PLOW KITS

OUTLANDER

60" (152 CM) ALPINE FLEX PLOW KIT

Fits: G2, G2L
715003149
$984.97

THIS KIT INCLUDES

60" (152 cm) Alpine Flex Plow
715001181 • Black

Alpine Flex Push Frame with Quick-Attach System
715001847

Plow Mounting Kit
715001411



60" (152 CM) ALPINE SUPER-DUTY STRAIGHT PLOW KIT

Fits: G2 (except 6x6 models), G2L
715003148
$714.97

THIS KIT INCLUDES

60" (152 cm) Alpine Super-Duty Straight Plow
715000648 • Yellow

Alpine Super-Duty Push Frame with Quick-Attach System
715001182

Plow Mounting Kit
715001411



OUTLANDER RENEGADE

54" (137 CM) ALPINE SUPER-DUTY STRAIGHT PLOW KIT

Fits: G2 (except 6x6 models), G2L, G2S
715003147
$574.97

THIS KIT INCLUDES

54" (137 cm) Alpine Super-Duty Straight Plow
715000208 • Black

Alpine Super-Duty Push Frame
715001064

Plow Mounting Kit
715002858



ALPINE FLEX PLOWS



OUTLANDER RENEGADE

PLOWS

ALPINE FLEX PLOW 54" (137 CM) & 60" (152 CM)

- Clears 50" (127 cm) or 54" (137 cm) when plow is angled.
- Ideal for clearing narrower areas, like sidewalks.
- Plow made of flexible UHMWPE, which delivers the highest impact strength of any thermoplastic presently made.
- Enormous flex action prevents damaging your plow when accidental impact happens.
- Impact absorption properties return plow to its original shape.
- Rearward release action practically eliminates jolts from being transferred to the driver or unit.
- Attaches and detaches effortlessly thanks to a fast and easy mounting system.
- Blade-turning mechanism mounted high to eliminate having to bend down to change or adjust blade's angle.
- High pivot point keeps plow on pavement.
- Compatible with all Alpine Flex Plow accessories to further enhance plow versatility.

Fits: G2, G2L, G2S

54" (137 cm)	60" (152 cm)
715001677	715001181
$339.99	$369.99



60" (152 cm)

BUILD YOUR CUSTOM ALPINE FLEX PLOW SYSTEM

01 FIND YOUR PLATFORM	02 MATCH THE PUSH FRAME	03 MATCH THE MOUNTING KIT	04 CHOOSE THE PLOW WIDTH	
G2, G2L	715001847	715001411	60" (152 cm) Alpine Flex Plow **715001181** OR 54" (137 cm) Alpine Flex Plow **715001677**	ADD ALPINE FLEX PUSH FRAME EXTENSION (715001389) IF USING ALPINE FLEX UHMW THERMOPLASTIC PLOW WITH APACHE 360 TRACK SYSTEM
G2S	715001848			

PUSH FRAME

ALPINE FLEX PUSH FRAME WITH QUICK ATTACH SYSTEM

- Refer to the chart on page 54 for the fitting.

715001848

$509.99

715001847

- Includes cable saver limit switch and plow roller fairlead.

$509.99



ALPINE FLEX PUSH FRAME EXTENSION

- Bolt-on push frame extension for use with Apache 360 Track System.
- Does not alter plow functionality.
- Fits Alpine Flex Push Frames (715001847 & 715001848).

Fits: Alpine Flex Plows

715001389

$104.99



MOUNTING KIT

PLOW MOUNTING KIT

(Not illustrated)

- Required to install Alpine Super-Duty Push Frames with Quick Attach system (715001182, 715001474) and Alpine Flex Push Frames (715001847, 715001848).
- Mounting plate precision-designed to stay on year round without compromising ground clearance.
- Fits with or without Can-Am Skid Plates.

715001411

$104.99

ALPINE FLEX PLOW ACCESSORIES

ALPINE FLEX PLOW EDGE MARKERS

- For a more accurate view of the width of your plow so you avoid damaging your curb, your car or your house.

Fits: Fit Alpine Flex Plows

715001388

$39.99

ALPINE FLEX 8" (20 CM) PLOW EXTENSIONS

- These conveniently extend your Alpine Flex Plow.

Fits: Fit Alpine Flex Plows

715001385

$134.99

ALPINE FLEX DRIFT CUTTER

- Keeps snow securely in the plow.
- Fits on either left or right side.
- Sold individually.
- Requires 8" (20 cm) Alpine Flex Extensions.

Fits: Alpine Flex Plows

715001386

$94.99



ALPINE FLEX WEAR BLADE (STEEL)

- Long lasting wear blade that provides a sharper cut than the stock wear blade.
- Replaces stock wear blade.

Fits: Alpine Flex Plow 54" (137 cm)

715001704

$89.99

Fits: Alpine Flex Plow 60" (152 cm)

715001476

$89.99

- Stock replacement blade that is versatile for general plowing.

Fits: Alpine Flex Plow 54" (137 cm)

705203199

$89.99

Fits Alpine Flex Plow 60" (152 cm)

705202835

$89.99

ALPINE FLEX WEAR BLADE (PLASTIC)

- Flexible UHMWPE plastic construction won't scratch your driveway.
- Replaces stock wear blade.

Fits: Alpine Flex Plow 54" (137 cm)

715001703

$134.99

Fits Alpine Flex Plow 60" (152 cm)

715001475

$134.99

ALPINE FLEX PLOW RUBBER FLAP

(Not illustrated)

- Keeps snow away from the driver.
- Minimizes snow flowing over plow.
- Increases snow rolling effect.

Fits: Alpine Flex Plow 60" (152 cm)

715001387

$59.99

Fits: Alpine Flex Plow 54" (137 cm)

715001767

$59.99

ALPINE SUPER-DUTY STEEL PLOWS



OUTLANDER RENEGADE

PLOWS

ALPINE SUPER-DUTY STRAIGHT PLOW

- Super-duty plow blades made from 12-gauge steel.
- Replaceable wear blades.
- Blades swivel left or right, 5 positions.
- Large pin designed for easy blade rotation to eliminate dirt and snow buildup at pivot point.
- Blade design provides best snow/dirt roll-off at any angle.
- Yellow-colored version Can-Am branded.

Fits: G2, G2L, G2S

60" (152 cm)
- When angled, clears 53½" (136 cm) path.

715000209 • Black
715000648 • Yellow
$229.99

54" (137 cm)
- When angled, clears 48" (123 cm) path.

715000208 • Black
715000647 • Yellow
$219.99



54" (137 cm)

ALPINE SUPER-DUTY ONE WAY STATE PLOW

- One-way "winged" state plow designed to throw snow higher.
- Wing end of plow measures 25" (63 cm) high and tapers down to 16" (41 cm).
- Rubber flap designed to keep snow away from driver.
- Yellow-colored version Can-Am branded.

Fits: G2, G2L, G2S

60" (152 cm)

715000649 • Yellow
715000207 • Black
$309.99

66" (168 cm)

715000650 • Yellow
$349.99



60" (152 cm)

BUILD YOUR CUSTOM ALPINE SUPER-DUTY STEEL PLOW SYSTEM

01 FIND YOUR PLATFORM	02 CHOOSE YOUR TYPE OF PUSH FRAME	03 MATCH THE MOUNTING KIT	04 CHOOSE THE PLOW WIDTH	
G2, G2L	715001064 + 715002858 OR 715001182 + 715001411		66" (168 cm) Alpine Super-Duty One Way State Plow **715000650 • Yellow** **OR** 60" (152 cm) Alpine Super-Duty One Way State Plow **715000649 • Yellow** **715000207 • Black** **OR** 60" (152 cm) Alpine Super-Duty Straight Plow **715000648 • Yellow** **715000209 • Black** **OR** 54" (137 cm) Alpine Super-Duty Straight Plow **715000647 • Yellow** **715000208 • Black**	ADD ALPINE SUPER-DUTY PUSH FRAME EXTENSION (703500603) IF USING ALPINE SUPER-DUTY STEEL PLOW WITH APACHE 360 TRACK SYSTEM
G2S	715001064 + 715002858 OR 715001474 + 715001411			

PUSH FRAME

ALPINE SUPER-DUTY PUSH FRAME WITH QUICK ATTACH SYSTEM

- Tubes withstand roughest use.
- Mid-mount carriage provides up to 11½" (29 cm) lift.
- Fits all steel blade styles.
- Improved auto aligning quick-attach system, easy foot lever release pedal, cable saver limit switch preventing cable breakage by automatically stopping the winch.
- Fits on Plow Mounting Kit (715001411 & 715002858) depending on your vehicle platform.
- Refer to the chart above for the fitting.

715001182 • Includes plow roller fairlead
715001474

$379.99



ALPINE SUPER-DUTY PUSH FRAME

- Super-duty push tubes withstand the roughest use.
- Mid-mount carriage provides up to 11½" (29 cm) of lift.
- Fits all steel blade styles.
- Quick-attach not included.
- Refer to the chart above for the fitting.

715001064

$249.99



MOUNTING KIT

PLOW MOUNTING KIT

(Not illustrated)

- Required to install Alpine Super-Duty Push Frames with Quick Attach System (715001182, 715001474) and Alpine Flex Push Frames (715001847 & 715001848).
- Mounting plate precision-designed to stay on year round without compromising ground clearance.
- Fits with or without Can-Am Skid Plates.
- Refer to the chart above for the fitting.

715001411

$104.99

PLOW MOUNTING KIT

(Not illustrated)

- Required to install Alpine Super-Duty Push Frame (715001064).
- Quick-release pins attach and detach plow blade and base assembly in minutes.
- Simplified installation.
- Can be used with or without Alpine Super-Duty Quick Attach System (715000731).
- No frame drilling required.
- Refer to the chart above for the fitting.

715002858

$104.99

ALPINE SUPER-DUTY ACCESSORIES





ALPINE SUPER-DUTY REMOTE ANGLING SYSTEM

- Increases operator convenience.
- Swivel system allows the driver to manually pivot the plow blade from the driver's seat.
- Cannot be used with the Push Frame Extension (703500603) and Push Frames with Quick Attach System (715001182 & 715001474).
- Does not fit Alpine Flex Plows.

715000260

$229.99

ALPINE SUPER-DUTY DRIFT CUTTER

- Helps keep snow in the plow.
- Designed with a rear pivot point.
- Works with both Straight and One Way State Blades.

Fits: Alpine Super-Duty Plow

Left	Right
715000217	715000218
$84.99	$84.99



ALPINE SUPER-DUTY QUICK ATTACH SYSTEM

- Available as an option to upgrade Alpine Super-Duty Push Frame (715001064).
- The plow will be easy to install with this quick attach system.
- Durable with a powder-coated rust-resistant finish.

715000731

$174.99



ALPINE SUPER-DUTY PUSH FRAME EXTENSION

- 12 1/4" (31 cm) chassis extension for use with Apache 360 Track System.
- Increases angle and enables extra blade rotation.
- Fits on Alpine Super-Duty Push Frame (715001063, 715001064, 715001182 & 715001474).

703500603

$149.99



ALPINE SUPER-DUTY PULLEY KIT

- Pulley kit to be used in conjunction with the winch when using a snow plow.
- Recommended to increase winch efficiency.
- To be used with the XT Front Bumper.

Fits: Alpine Super-Duty Plow

715000279

$49.99



OTHER PLOW ACCESSORIES

ALPINE SYNTHETIC WINCH CABLE

- Specially designed for plowing applications.
- 8' (2.4 m) section of durable, extra-strong synthetic rope.
- Stands up to repeated, sharp angle pulls used to lift heavy plow blades.
- Temporarily replace your winch rope for plow season to save wear and tear on wire rope.

715000540

$39.99



PLOW LIGHTS

- Featuring 35W H3 halogen bulbs and a lens design that achieves 110-degree beam spread to provide excellent lighting for plowing.

Fits: G2L

715000063

$69.99



PLOW ROLLER FAIRLEAD

- Larger diameter lower roller reduces wear on wire rope for plow application.
- For use with Alpine Super-Duty Plow.

Fits: G2

705005715

$59.99



REAR TIRE CHAINS

- Improve your traction in mud and snow.
- Sold in pairs.

26" x 10" x 12"	25" x 10" x 12"
715500218	715000225
$79.99	$79.99



COVERS, DECALS & ADD-ONS

TRAILERING COVERS

- X-attachment system.
- 300-denier solution-dyed, water-repellent 100% polyester construction.
- Fits with or without mirrors and windshield.
- Key areas are reinforced.
- Snug fitting and weather tough.

- Fits with or without trunk box and passenger seat.
- Has opening for access to the fuel tank.

Fits: G2 (except MAX models)
715001737
$194.99

Fits: G2 (MAX models only)
715001736
$219.99

- Fits with rack extensions.
- Has opening for access to the fuel tank.

Fits: G2L (except MAX models)
715002026
$194.99

Fits: G2L (MAX models only)
- Fits with passenger seat.

715002025
$219.99

- Fits with or without mirrors and windshield attachment brackets (windshield must be removed).

Fits: G2S (except X mr models)
715000683
$159.99

STORAGE COVERS

- For storage use only.
- Fits with or without windshield and mirrors.
- Heavy-duty elastic cord around bottom for secure fit.
- Snug fitting and weather tough.

- 100-denier water-repellent 100% polyester construction.
- Fits with or without trunk box and passenger seat.

Fits: G2 (except MAX models)
715001720
$144.99

Fits: G2 (MAX models only)
715001668
$154.99

- 100-denier water-repellent 100% polyester construction.

Fits: G2L (except MAX models)
715001916
$134.99

Fits: G2L (MAX models only)
715001917
$144.99

- All-season, all-weather, 300-denier solution-dyed water-repellent polyester protection for your vehicle.

Fits: G2L (except MAX models)
715001597 • Mossy Oak Break-Up Country Camo
$209.99

Fits: G2L (MAX models only)
715001735 • Mossy Oak Break-Up Country Camo
$219.99

- 100-denier water-repellent 100% polyester construction.

Fits: G2S
715000678
$109.99



LOCKABLE GAS TANK CAP
- Protects your fuel.
- Meets EPA requirements.

Fits: G2, G2L, G2S
860200387 • Black
$39.99



CUP HOLDER
- Mounts easily to handlebars or racks.

715000121
$79.99



LICENSE PLATE BRACKET
- Provides specific area to install license plate.
- Mounts to rear of vehicle.

Fits: G2L
715002498
$19.99

Fits: G2S
715001401
$19.99

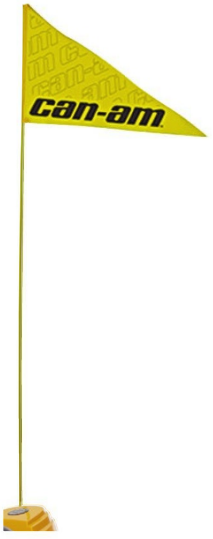

FLAG
- Make sure everyone knows what you're riding.
- Perfect for the dunes and new riders.
- 8-foot (2.4 m) length.
- Includes flag mount (715000127).

715000277 • Yellow
$24.99

FLAG MOUNT
715000127
$19.99



DECAL
- Set of 2
- 2" x 6" (5 cm x 15 cm)

704901480
$9.99



DECAL
- 9 per sheet
- 24" x 8" (60 cm x 20 cm)

704901481
$11.99



DECAL
- 6" x 12 3/4" (15 cm x 32 cm)

704901483
$13.99



DECAL
- 6" x 12 3/4" (15 cm x 32 cm)

704901484
$13.99

OUTLANDER 6X6 ACCESSORIES



OUTLANDER 6X6

APACHE 360 LT TRACK SYSTEM

- Exclusively for the Outlander 6x6.
- Cross obstacles up to 12" (30 cm).
- Enjoy superior acceleration, turning, braking, and side-hilling.
- Switch easily between enhanced attack angle or improved flotation.
- Reliable heavy-duty build.
- Can-Am designed technology.
- Delivers the highest ground clearance on the market.
- Mounting kit included.
- For winter use only.
- EC Compliant.

Fits: G2 (6x6 2016 and up models only)

715002386

$5,999.99

Fits: G2 (6x6 2014-2015 models only)

619590299

$6,049.98





OUTLANDER 6X6



HARD TOP

- The hard top provides a 116 Gal (440L) cargo box.
- Locking secures your belongings.
- The cover raises assisted by gas cylinders.

Fits: G2 (6x6 models only)

715002490

$849.99



LOG BARS

- Log bars allow you to convert the cargo bed into a perfect transport space for 4' (120 cm) timber.
- The driver's safety is guaranteed by the protective front screen.

Fits: G2 (6x6 models only)

715002486

$919.99



TAILGATE EXTENSION/DIVIDER

- The sturdy tailgate extension provides a 10" (25 cm) extension to the cargo space.
- Thanks to the longer cargo bed, even large loads pose no problem.
- With the help of LinQ quick locks, the extension also acts as a solid space divider for the cargo bed.

Fits: G2 (6x6 models only)

715002488

$439.99



TAILGATE LIMITER KIT

- 2 L-shape brackets that hold the tailgate open horizontally.
- Keeps tailgate flush with the rest of the flatbed for longer oversized cargo.

Fits: G2 (6x6 models only)

715002534

$59.99



OUTLANDER 6X6



18 GAL (70L) UTILITY BOX

- Wherever you go and whatever you do, this handy 18 Gal (70L) utility box is your mobile storage.
- The lid keeps your equipment safe from the elements in all conditions.
- Slides under the flatbed with handles for easy access.

Fits: G2 (6x6 models only)

715002487

$439.99



FLATBED PROTECTION TUBES

- Bolt-on bumpers for the sides of the 6x6 flatbed.
- Protects the exterior plastic components of the flatbed from rocks, trees and other obstacles when traversing enclosed areas or loading cargo onto the bed.

Fits: G2 (6x6 models only)

715002489

$409.99



REAR WINCH KIT

- The remote-controlled rear winch is a godsend when you want to pull yourself out of a tough spot or move heavy loads.
- Includes a fully-sealed Warn winch and all wiring and hardware needed for an easy and quick installation.
- Pulling strength capability of 3,000 lb (1,361 kg).
- 50 ft. of 3/16" (15.2 m of 4.8 mm) wire steel cable.

Fits: G2 (6x6 models only)

715002484

$999.99



OUTLANDER 6X6



TARPAULIN

- Fitted to cover all of the items in your cargo box thoroughly.
- Prevents splash from entering cargo box.
- Easily removable for quick access.

Fits: G2 (6x6 models only)

715002491

$309.99

STORAGE COVER

(Not illustrated)

- For storage use only.
- Heavy-duty elastic cord around bottom for secure fit.
- 100-dernier polyester construction.
- Fits with or without windshield and mirrors.

Fits: G2 (6x6 models only)

715002492

$259.99



FULL BODY SKID PLATE

- A full body plastic skid plate (10 mm HDPE) designed to protect the frame and the engine case from rough terrain conditions.
- The plastic allows your ATV to slide easily over stumps and logs.

Fits: G2 (6x6 models only)

715002485

$559.99

EXCLUSIVE WRAP KITS

SHOW OFF YOUR INDEPENDENCE WITH ANY OF THESE BOLD STATEMENTS FROM SCS.

The creative minds at SCS are constantly collaborating with BRP designers, coming up with innovative, perfectly-sized wrap designs that will complement your vehicle and refresh its look. You're unique. Your ride should be too.

MAVERICK X3



XTRA


UNDERTAKER


ONYX


BUZZARD


PHARSYDE


SQUADRON

MAVERICK


STYLES


BLUBLOCK

Adding doors? We can add graphics that are a perfect match to any of our Maverick Wrap Kits!

DEFENDER


TREAD

SCS wraps are of the highest quality, made with 0.004" engineering-grade vinyl overlaid with a 0.008" UV-protective laminate. That means vibrant colors, easy installation and a wrap that will hold up to the rigors of the off-road.
> SCS can even customize the color combinations; adding names, numbers and logos according to your exact specifications.
> Available for both 2-seat and 4-seat Maverick, Maverick X3 and Defender models.

Produit Autorisé Licensed Product

Available at participating Can-Am dealers and **scscanamgraphics.com**



BRP BACKS THE BEST.[1]

BRP LIMITED WARRANTY[2]

FOR NEW PARTS, ACCESSORIES AND RIDING GEAR.

GENUINE BRP PARTS AND ACCESSORIES
installed by you or your authorized BRP dealer

1 YEAR LIMITED WARRANTY**

AFTERMARKET PRODUCTS SOLD THROUGH BRP[3]

1 YEAR LIMITED WARRANTY**

RIDING GEAR

1 YEAR LIMITED WARRANTY**

HELMETS

4 YEARS LIMITED WARRANTY**

GET ALL THE DETAILS FROM YOUR CAN-AM OFF-ROAD DEALER

[1]Use other than which the product is designed for will void the product lifetime warranty. [1]Applies only to BRP-made products or aftermarket products made by accredited BRP partners. [2]Purchased at an authorized BRP dealership / distributor or on a BRP-authorized online store. Other exclusions may apply, see complete limited warranty or contact your Can-Am off-road authorized dealer. [3]Includes only BRP-approved aftermarket products and products made by currently accredited BRP partners. **Unless otherwise stipulated or required by law. This limited warranty does not apply to factory installed accessories. This limited warranty does not apply on Evinrude parts and accessories. This limited warranty is effective as of March 1st 2016.

CAN-AM SIDE-BY-SIDE VEHICLE ACCESSORIES



68 COMPATIBILITY GUIDE
71 ROOFS
73 WINDSHIELDS & MIRRORS
75 DOORS & REAR WIND PROTECTION
76 SKID PLATES
77 BUMPERS & PROTECTION
82 SEATS
83 CARGO & RACKS
84 LIGHTING
87 ELECTRICAL
88 WINCHES & HITCHES
88 PERFORMANCE
89 COVERS



68 COMPATIBILITY GUIDE
91 HARD CAB ENCLOSURES
93 SOFT CAB ENCLOSURES
96 ROOFS
101 WINDSHIELDS & MIRRORS
105 DOORS
108 REAR WIND PROTECTION
111 SKID PLATES
115 BUMPERS & PROTECTION
130 CARGO & RACKS
144 LIGHTING
150 ELECTRICAL
155 WINCHES & HITCHES
164 APACHE 360 LT TRACK SYSTEM
166 PLOWS
168 COVERS & ADD-ONS



MAVERICK

68 COMPATIBILITY GUIDE
94 SOFT CAB ENCLOSURES
98 ROOFS
103 WINDSHIELDS
104 MIRRORS
106 DOORS
110 REAR WIND PROTECTION
112 SKID PLATES
122 BUMPERS & PROTECTION
137 CARGO & RACKS
144 LIGHTING
151 ELECTRICAL
155 WINCHES & HITCHES
158 SEATS
159 PERFORMANCE
164 APACHE 360 LT TRACK SYSTEM
166 PLOWS
168 COVERS & ADD-ONS



COMMANDER

68 COMPATIBILITY GUIDE
92 HARD CAB ENCLOSURES
95 SOFT CAB ENCLOSURES
98 ROOFS
103 WINDSHIELDS
105 MIRRORS
106 DOORS
110 REAR WIND PROTECTION
114 SKID PLATES
125 BUMPERS & PROTECTION
137 CARGO & RACKS
144 LIGHTING
151 ELECTRICAL
155 WINCHES & HITCHES
158 SEATS
159 PERFORMANCE
165 APACHE 360 LT TRACK SYSTEM
166 PLOWS
168 COVERS & ADD-ONS

THE CHOICE IS YOURS.



DUNE

MAKING IT THERE IS GREAT. MAKING IT THERE FIRST IS BETTER.



UTILITY

GETTING IT DONE. IT'S IN YOUR BLOOD.



ADVENTURE

ALONE, IT'S A RIDE. WITH FAMILY, IT'S AN ADVENTURE.

ACCESSORIES FOR YOUR RIDE.

DUNE ACCESSORIES

1. Dune Front Bumper p. 81
2. Dune Rear Bumper p. 81
3. Front Intrusion Bar p. 79
4. Rear Cage Extension p. 80
5. Lower Door Panels p. 75
6. 40" (102 cm) Baja Designs OnX6 Arc LED Light Bar p. 84
7. Light Support Bar p. 85
8. Lighted Whip Flag p. 87
9. Aluminum Roof p. 72
10. Complete MTX Audio System p. 87
11. Baja Designs Squadron Sport LED Light p. 85
12. Racing Side Mirrors p. 74
13. Electronic Device Holder p. 87



MAVERICK X3

UTILITY ACCESSORIES

1. Bed Wall Extender p. 131
2. Headache Rack p. 130
3. Side Mirror p. 104
4. Xtreme Front Bumper Plates p. 117
5. Front Bumper p. 116
6. Front Corner Protectors p. 116
7. Half Windshield p. 102
8. Sport Roof p. 96
9. Light Rack p. 146
10. HID Lights by Hella p. 146
11. 4" (10 cm) Round LED Lights (2 X 25 Watts) p. 147



DEFENDER

ADVENTURE ACCESSORIES

1. Rear Wind Screen p. 110
2. Half Windshield p. 103
3. Sport Roof p. 99
4. XT Front Bumper p. 128



COMMANDER

THE CHOICE IS YOURS.

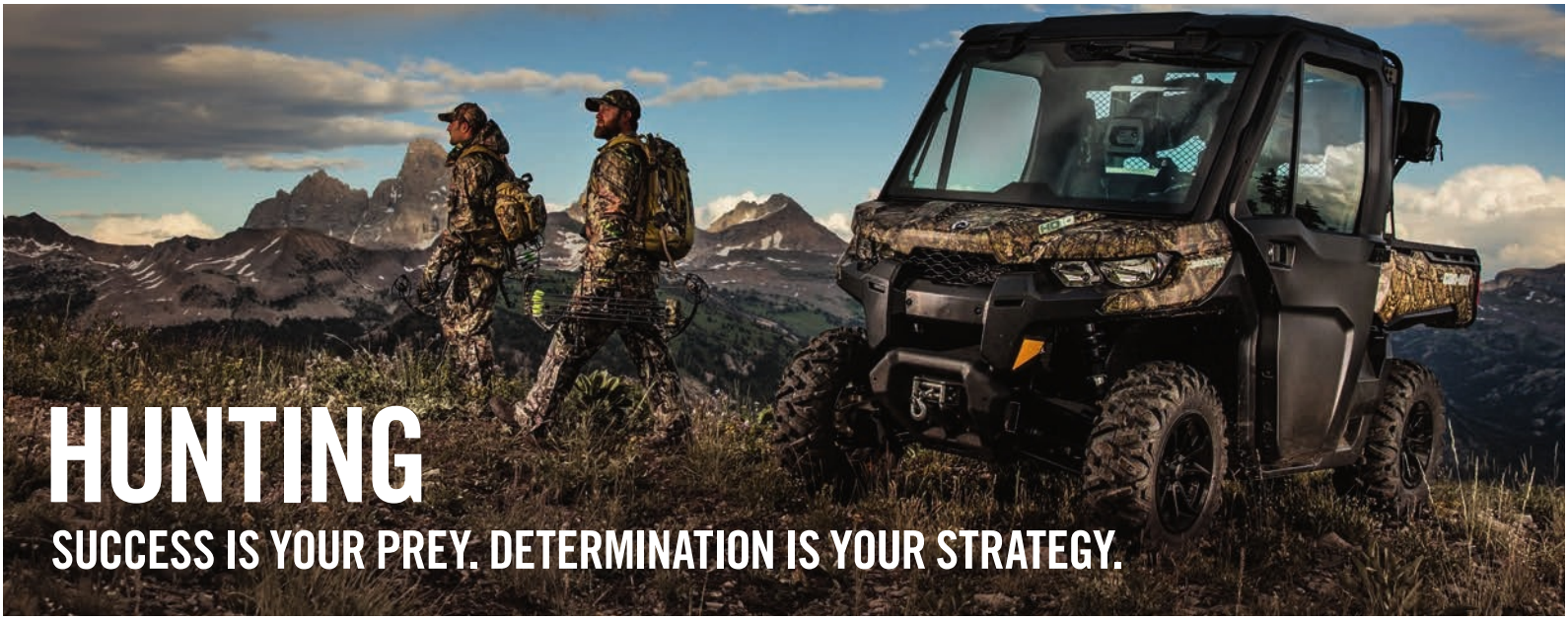

HUNTING

SUCCESS IS YOUR PREY. DETERMINATION IS YOUR STRATEGY.



MUD

MUD IS MEAN. YOU'RE MEANER.



WINTER

OTHERS HEAD SOUTH. YOU HEAD OUT.

ACCESSORIES FOR YOUR RIDE.

HUNTING ACCESSORIES

1. Sport Roof p. 96
2. Half Windshield p. 102
3. Headache Rack p. 130
4. Front Bumper p. 116
5. Gear Rail p. 138
6. Gun Boot 6.0 Impact by Kolpin p. 137
   Gun Boot Mount by Kolpin p. 137



DEFENDER

MUD ACCESSORIES

1. Sport Aluminum Roof p. 99
2. Half Windshield p. 103
3. Front Pre-Runner Bumper p. 124
4. Rear Bumper p. 125
5. Rock Sliders p. 127
6. Radiator Protector p. 163
7. 39" (99 cm) Double Stacked LED Light Bar (270 Watts) p. 144
8. Super Extended Fender Flare p. 160
9. Snorkel Kit p. 161



MAVERICK X xc

WINTER ACCESSORIES

1. Soft Cab Enclosure p. 93
2. Apache 360 LT Track System p. 164
3. Alpine Flex Plow Kit p. 166
4. Xtreme Front Bumper Plates p. 117
5. Front Bumper p. 116
6. Front Corner Protectors p. 116
7. Side Mirror p. 104
8. Can-Am Terra 45 by Superwinch p. 155
9. Light Rack p. 146
10. 4" (10 cm) Round LED Lights (2 X 25 Watts) p. 147
11. 15" (38 cm) Double Stacked LED Light Bar (90 Watts) p. 144



DEFENDER

SIDE-BY-SIDE VEHICLES ACCESSORY COMPATIBILITY GUIDE

WE'VE MADE THINGS SUPER SIMPLE.

Determine your model year, find your model and engine configuration, and that'll reveal your platform code. This code will let you know at a glance if the accessory is compatible with your vehicle.

EXAMPLE



AIR INTAKE PRE-FILTER

- Adds extra protection to your engine in harsh riding conditions.
- Filter blocks particles larger than 0.005" (0.1 mm).
- Necessary to maintain the vehicle warranty when tracks are installed.

Fits: RS (except X mr, X ds Turbo, Turbo, X rs Turbo 2016 & up models), RU

715000953

$39.99

RS = Maverick & Maverick MAX for all option packages (DPS, XC DPS, X xc, X mr, X ds & X rs)
RU = Commander & Commander MAX for all option packages (DPS, X, XT, Mossy Oak Edition, XT-P & Limited)
UR = Defender for all option packages (DPS, XT, XT CAB)
SSP = Maverick X3 for all options packages (X ds, X rs)

	MODEL	ENGINE	PLATFORM
2011	Commander	800, 1000	RU
2012	Commander	800, 1000	RU
2013	Commander	800, 1000	RU
	Maverick	1000	RS
2014	Commander	800, 1000	RU
	Commander MAX	1000	RU
	Maverick	1000	RS
	Maverick MAX	1000	RS



RU



RU

	MODEL	ENGINE	PLATFORM
2015	Commander	800, 1000	RU
	Commander MAX	1000	RU
	Maverick	1000	RS
	Maverick MAX	1000	RS
2016	Commander	800, 1000	RU
	Commander MAX	800, 1000	RU
	Maverick	1000	RS
	Maverick MAX	1000	RS
	Defender	HD8, HD10	UR
2017	Commander	800, 1000	RU
	Commander MAX	800, 1000	RU
	Defender	HD8, HD10	UR
	Defender MAX	HD8, HD10	UR
	Maverick	1000	RS
	Maverick MAX	1000	RS
	Maverick X3	Turbo R	SSP



RS



RS



UR



SSP


NEW
MAVERICK X3
ACCESSORIES
THE ALL NEW
MAVERICK X3
can-am



MAVERICK X3



NEW

BIMINI ROOF WITH SUN VISOR

- Soft top with hard visor.
- UV-resistant, water-repellent 600-denier solution-dyed polyester with Can-Am branding.
- Allows user to stow the soft top on the hard visor.
- Easy, tool-less installation and removal with quick release 1/2 turn fasteners.

Fits: SSP

715002901

$299.99



NEW

SPORT ROOF

- Impact-resistant injected polypropylene.
- Excellent protection from the elements.
- Provides excellent downhill visibility.
- Easy, tool-less installation.
- Standard on Maverick X3 X rs.
- Windshield compatible.

Fits: SSP

715002902

$374.99



MAVERICK X3

NEW

ALUMINUM ROOF

· Formed aluminum roof 0.09" (2.3 mm) thick.
· Durable and lightweight.
· Sporty look.
· Windshield compatible.
· Easy and tool-less installation.

Fits: SSP

715002900

$499.99



NEW

LONESTAR RACING ALUMINUM ROOF

· 0.083" (2.1 mm) thick aluminum roof.
· Durable and lightweight.
· Enhances the vehicle's racing appearance thanks to an authentic sporty look combined with unique graphics.
· Offers you protection from the elements with a personalized touch.
· Includes middle intrusion X bars for installation.
· Lower profile than other roofs.
· Compatible with Lonestar Racing Light Bar Racks.
· Not compatible with Light Support Bar and with Full Windshields.
· "Lonestar Racing for Can-Am" branded.

Fits: SSP

715003923 · Black (with wrap kit)
715004160 · Can-Am Red (with wrap kit)

$749.99





MAVERICK X3

NEW

HALF WINDSHIELD

- High-impact-resistant durable polycarbonate half windshield.
- Formed polycarbonate construction for enhanced rigidity.
- Formulated to be non-yellowing, non-crazing, non-cracking with excellent UV resistance and optical clarity.
- Protects driver and passenger from the elements.
- Features reverse angle lip to deflect air flow.
- Quick and easy tool-less installation or removal.

Fits: SSP

715002909

$279.99





MAVERICK X3



NEW

FULL WINDSHIELD

· High-impact-resistant durable polycarbonate full windshield.
· Formed polycarbonate construction for enhanced rigidity.
· Formulated to be non-yellowing, non-crazing, non-cracking with excellent UV resistance and optical clarity.
· Protects driver and passenger from the elements.
· Quick and easy tool-less installation or removal.

Fits: SSP

715002907

$399.99



NEW

FULL WINDSHIELD - HARDCOATED

· High-impact-resistant Quantum† hardcoated polycarbonate full windshield.
· Formed polycarbonate construction for enhanced rigidity.
· Provides excellent optical clarity and better abrasion resistance.
· Protects driver and passenger from the elements.
· Quick-attach brackets procure fast, easy and tool-less installation and removal.

Fits: SSP

715002908

$599.99

NEW

RACING SIDE MIRRORS

· Race-inspired design features rugged black nylon 6/6 construction with coated cast-aluminum mount.
· Dual-adjustment provides optimal field of view (FOV).
· Multi-position adjustable ball-joint mounted mirrors.
· Flat optics deliver improved distance perception.
· Spring-loaded pivots let mirrors fold back completely.
· Not compatible with Lonestar Racing Light Racks.
· Sold in pairs.

Fits: SSP

715002898

$199.99





MAVERICK X3



NEW

LOWER DOOR PANELS

- Robust injection-molded polypropylene construction designed to match vehicle.
- Extends stock doors at bottom to protect cab area.
- A great-looking add-on.
- Easy and quick installation.
- Sold in pairs.

Fits: SSP

715002903

$349.99



NEW

REAR WIND SCREEN

- Full rear mesh coverage reduces windshield backdraft.
- Roll-bar mounted.
- Can-Am logo on black mesh.

Fits: SSP

715002897

$79.99

SKID PLATES

HMWPE SKID PLATES

Our Plastic Plates glide smoothly and silently over obstacles, offering great protection in rough terrain. Made of abrasion-resistant thermoformed High Molecular Weight Polyethylene (HMWPE). Lighter than aluminum. Cold cracking resistant. High impact energy absorbtion.

MAVERICK X3

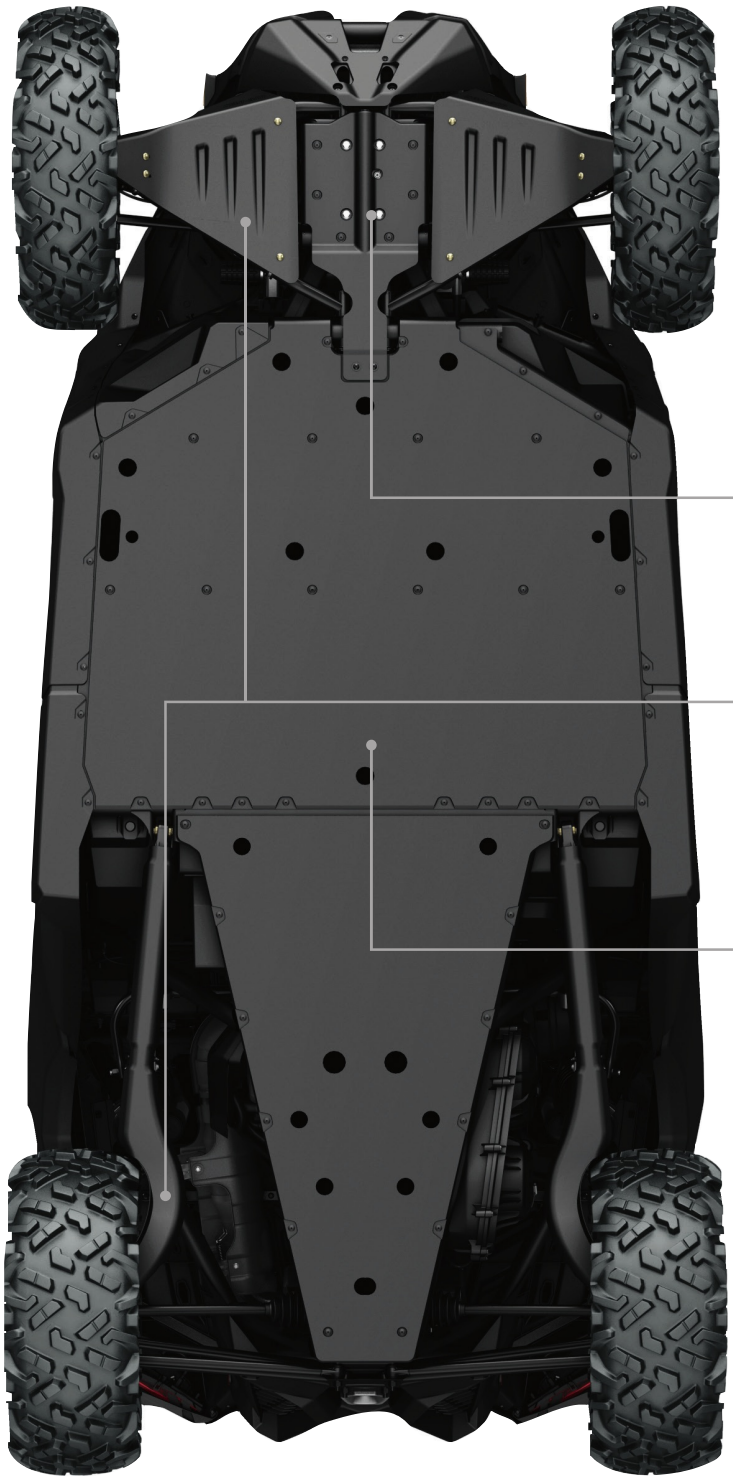

SSP (except X rs)	SSP (X rs only)

HMWPE SKID PLATE PROTECTION KIT

INCLUDES:
- HMWPE Front A-Arm and Trailing Arm Protectors
- HMWPE Front Skid Plates
- HMWPE Underbelly Plates

SSP (except X rs)	SSP (X rs only)
NEW 715003713 $799.99	

INDIVIDUAL HMWPE SKID PLATES

HMWPE FRONT SKID PLATE

· Thermoformed HMWPE construction.

SSP (except X rs)	SSP (X rs only)
NEW 715003933 $99.99	NEW 715003933 $99.99

HMWPE FRONT A-ARM AND TRAILING ARM PROTECTORS

· Thermoformed HMWPE construction.
· Includes Front A-Arm and Trailing Arm protectors.
· Can-Am branded.

SSP (except X rs)	SSP (X rs only)
NEW 715002905 $249.99	

HMWPE UNDERBELLY PLATE

· Ultra-sturdy 3/8" (9.5 mm) thickness.
· Provides mid and rear protection.
· Standard on Maverick X3 X rs.

SSP (except X rs)	SSP (X rs only)
NEW 715002904 $449.99	

MAVERICK X3





NEW

LONESTAR RACING FRONT BUMPER

- Made of 1.5" (3.8 cm) diameter steel tubing with durable powder coat finish with a 1/8" (3 mm) thick aluminum plate for added vehicle-front protection in extreme driving conditions.
- Sleek styling enhances the vehicle's race-inspired look.
- Not winch compatible.
- "Lonestar Racing for Can-Am" branded.

Fits: SSP

715003914 · Black
715004161 · Can-Am Red

$399.99



NEW

LONESTAR RACING REAR BUMPER

- Made of 1.5" (3.8 cm) diameter steel tubing with durable powder coat finish.
- Provides additional vehicle-rear bodywork and exhaust system protection in extreme driving conditions.
- Sleek styling enhances the vehicle's race-inspired look.
- Compatible with Lonestar Spare Tire Holder and Lonestar Racing Rear Intrusion Bar.
- Not hitch compatible.
- "Lonestar Racing for Can-Am" branded.

Fits: SSP

715003915 · Black
715004162 · Can-Am Red

$419.99

MAVERICK X3



NEW

LONESTAR RACING FRONT INTRUSION BAR

- Made of 1.5" (3.8 cm) diameter steel tubing with durable powder coat finish.
- Enhances the racing look of the vehicle.
- Compatible with Lonestar Racing Aluminum Roof.
- Not compatible with windshields, bimini roof and sport roof.
- "Lonestar Racing for Can-Am" branded.

Fits: SSP

715003916 · Black
715004163 · Can-Am Red

$429.99



NEW

LONESTAR RACING REAR INTRUSION BAR

- Made of 1.5" (3.8 cm) diameter steel tubing with durable powder coat finish.
- Sleek styling enhances the vehicle's race-inspired look.
- Required for the installation of the Lonestar Racing Spare Tire Holder.
- "Lonestar Racing for Can-Am" branded.

Fits: SSP

715003918 · Black
715004164 · Can-Am Red

$349.99



NEW

LONESTAR RACING SPARE TIRE HOLDER

- Made of 1.5" (3.8 cm) diameter steel tubing with durable powder coat finish.
- Ajustable heigth for different tire width and sizes.
- Requires Lonestar Racing Rear Bumper and Lonestar Racing Rear Intrusion Bar for installation.
- Not compatible with the Wheel Jack.
- Spare tire not included.
- "Lonestar Racing for Can-Am" branded.

Fits: SSP

715003922 · Black
715004166 · Can-Am Red

$249.99



NEW

LONESTAR RACING ROCK SLIDERS

- Made of 1.5" (3.8 cm) diameter steel tubing with durable powder coat finish filled with 1/8" (3 mm) aluminum plate.
- Protects vehicle sides from large obstacles.
- Sleek styling enhances the vehicle's race-inspired look.
- Sold in pairs.
- "Lonestar Racing for Can-Am" branded.

Fits: SSP

715003921 · Black
715004165 · Can-Am Red

$349.99



MAVERICK X3



NEW

FRONT INTRUSION BAR

· Matches vehicle styling.
· Inside and outside anti-corrosion coating with durable powder coat finish steel intrusion bar.
· Tube design reduces obstructed lines of sight and blind spots for better visibility.
· Not compatible with windshields and Lonestar Racing Aluminum Roof.

Fits: SSP

715002889 · Black
$329.99

715003435 · Can-Am Red
$379.99





MAVERICK X3

NEW

FRONT PRE-RUNNER BUMPER

- Made of 1.5" (3.8 cm) diameter steel tubing with a 1/8" (3 mm) aluminum plate for extra durability.
- Inside and outside anti-corrosion coating with durable powder coat finish.
- Added heavy-duty protection in extreme driving conditions.
- Includes integrated winch mounting plate and mount points for lights.

Fits: SSP

715002878 · Black

$349.99

715003433 · Can-Am Red

$399.99



NEW

REAR PRE-RUNNER BUMPER

- Extra-durable 1.5" (3.8 cm) diameter steel tubing with a 1/8" (3 mm) aluminum plate.
- Inside and outside anti-corrosion coating with durable powder coat finish.
- Protects vehicle bodywork and exhaust system.
- Rear receiver hitch compatible.
- Required for installion of the Rear Cage Extension.

Fits: SSP

715002880 · Black

$349.99

715003436 · Can-Am Red

$399.99



NEW

REAR CAGE EXTENSION

- Durable 1.5" (3.8 cm) diameter steel tubing.
- Inside and outside anti-corrosion coating with durable powder coat finish.
- Allows holding a spare tire in place (tire not included).
- Custom tie-down strap for fast tire installation or removal.
- Rear Pre-Runner Bumper required for installation.
- Not compatible with LinQ Pivoting Rack and cargo boxes (except LinQ 20 Gal (73L) Deluxe Modular Bag).

Fits: SSP

715002890 · Black

$299.99

715003434 · Can-Am Red

$349.99



MAVERICK X3



NEW

DUNE FRONT BUMPER

· Made of 1.5" (3.8 cm) diameter aluminum tubing with a 1/8" (3 mm) aluminum plate.
· Inside and outside anti-corrosion coating with durable powder coat finish.
· Provides added protection without sacrificing the agility and performance advantages of a lighter weight design.
· Features a more pronounced attack angle and integrated mounting points for lights.
· Not winch compatible.

Fits: SSP

715002961 · Black
$299.99

715003432 · Can-Am Red
$349.99



NEW

DUNE REAR BUMPER

· Made of 1.5" (3.8 cm) diameter aluminum tubing with a 1/8" (3 mm) aluminum plate.
· Inside and outside anti-corrosion coating with durable powder coat finish.
· Provides added protection without sacrificing the agility and performance advantages of a lighter weight design.
· Protects vehicle bodywork and exhaust system.
· Rear receiver hitch compatible.
· Not compatible with Rear Cage Extension.

Fits: SSP

715002962 · Black
$299.99

715003437 · Can-Am Red
$349.99



NEW

ROCK SLIDERS

· Made of heavy-duty 1.5" (3.8 cm) diameter steel tubing.
· Inside and outside anti-corrosion coating with durable powder coat finish.
· Protect vehicle's sides and undercarriage against large obstacles.
· Support plate adds rigidity and style.
· Sold in pairs.

Fits: SSP

715002963 · Black
$299.99

715003438 · Can-Am Red
$349.99



NEW

SUPER EXTENDED FENDER FLARES

· Extended fender flares made from injection-molded polypropylene.
· Keep mud and debris out of vehicle.
· Designed for quick and easy intallation.
· Include front and rear extensions and mounting hardware.

Fits: SSP

715002973
$299.99



MAVERICK X3

BEARD for can-am

NEW

BEARD SEATS

- True performance seating for driver and passenger.
- Designed specifically for side-by-side vehicle applications.
- Offer great posture for both driver and passenger during intense riding conditions, thanks to the ideal seat angle and wide pitch range.
- Feature a high level of containment support, which gives superior comfort and stability.
- Hard fiberglass shell covered with sculpted foam and wrapped with a custom cover of premium marine-grade vinyl, which is durable in all driving conditions and resistant to mildew and fading.
- Enhance the racing look of the vehicle.
- No additional seat mounts required.
- Requires 4-point harness (715003767, 715003766).
- Sold in pairs.



Fits: SSP

715004194 · Circuit Yellow
715004195 · Can-Am Red
715004196 · Steel Grey

$999.99

NEW COMING SOON

4-POINT HARNESS

- Reduce submarining.
- Exclusive controlled decelarator absorbs energy in case of an accident.
- No uncomfortable crotch strap.
- Easy one-click latch and release.
- Drivers harness includes safety buckle switch.
- Patent pending.

715003767 · Passenger
715003766 · Driver





MAVERICK X3

LinQ SYSTEM

NEW

LinQ 8 GAL (30L) COOLER BOX

- Rotomolded construction provides exceptional rigidity and durability along with optimal ice retention.
- Premium-quality foam insulation.
- Integrated, fully-removable compartment protects food.
- Weather-resistant, lockable.
- Convenient drain plug.
- Fits on all vehicles using a LinQ rack.



Fits: RS, SSP

715002892

$349.99







LinQ SYSTEM

NEW

LinQ PIVOTING RACK

- LinQ latched rack allows for extra LinQ mounted accessories or for carrying a spare tire.
- Includes custom tie-down strap for fast spare tire installation or removal.
- Gas-cylinder pivot action, locks in the raised position.
- Trunk Boxes over 20 Gal (74L) do not fit on the vehicle when the rack is installed.
- Not compatible with Rear Intrusion Bars and Rear Cage Extension.

Fits: SSP

715002881 · Black

$449.99

715003439 · Can-Am Red

$499.99

FOR OTHER CARGO AND RACK ACCESSORIES THAT FIT YOUR MAVERICK X3 CONSULT P.141-143



MAVERICK X3



baja designs

NEW

40" (102 CM) BAJA DESIGNS ONX6 ARC LED LIGHT BAR

- Made by Baja Designs.
- 25,800 lumens utilizing 24 Cree XM-L2 LEDs.
- Driving/Combo light pattern for smooth blend of light for both near field applications and distance.
- Dual intensity (high/low) settings + strobe mode.
- Designed for installation onto Light Support Bar equipped roofs.
- Requires Light Power Cable and Light Support Bar.

Fits: SSP

710004630

$1,699.99



baja designs

NEW

10" (25 CM) BAJA DESIGNS ONX6 LED LIGHT BAR

- Made by Baja Designs.
- 6,450 lumens utilizing 6 Cree XM-L2 LEDs.
- Driving/Combo light pattern for smooth blend of light for both near field applications and distance.
- Dual intensity (high/low) settings + strobe mode.
- Designed for installation onto Pre-Runner and Dune bumpers and/or Light Support Bar equipped roofs.
- Requires Light Power Cable.

Fits: SSP

710004881

$439.99

FOR OTHER LIGHTING ACCESORIES THAT FIT YOUR MAVERICK X3 CONSULT P.144-147

MAVERICK X3



NEW

BAJA DESIGNS XL SPORT LED LIGHTS

- Made by Baja Designs.
- 1,800 lumens utilizing 4 Cree XP-G2 LEDs.
- Spotlight pattern for long range lighting.
- High Speed Spot features a longer and narrower beam focus for illumination farther down.
- Designed for installation onto Pre-Runner and Dune bumpers and/or Light Support Bar equipped roofs.
- Require Light Power Cable.
- Sold in pairs.

Fits: SSP

710005287

$409.99



NEW

BAJA DESIGNS SQUADRON SPORT LED LIGHTS

- Made by Baja Designs.
- 1,800 lumens utilizing 4 Cree XP-G2 LEDs.
- Designed for installation onto Pre-Runner bumpers and/or Light Support Bar equipped roofs.
- Wide cornering light pattern designed specifically for cornering, dust and/or fog conditions.
- Require Light Power Cable.
- Sold in pairs.

Fits: SSP

710004648

$239.99



NEW

BAJA DESIGNS XL80 LED LIGHTS

- Made by Baja Designs.
- 9,500 lumens utilizing 4 Cree XHP50 LEDs.
- Dual intensity (high/low) settings.
- Driving/Combo light pattern for smooth blend of light for both near field applications and distance.
- Designed for installation onto Pre-Runner and Dune bumpers and/or Light Support Bar equipped roofs.
- Require Light Power Cable.
- Sold in pairs.

Fits: SSP

710005041

$829.99

SSP VEHICLES

01 CHOOSE YOUR MOUNT POINT

02 CHOOSE YOUR LIGHTS

	BAJA DESIGNS					CAN-AM			
	10" (25 CM) ONX6 LED LIGHT BAR	40" (102 CM) ONX6 ARC LED LIGHT BAR	XL SPORT LED LIGHTS (SOLD IN PAIRS)	SQUADRON SPORT LED LIGHTS (SOLD IN PAIRS)	XL80 LED LIGHTS (SOLD IN PAIRS)	10" (25 CM) DOUBLE STACKED LED BAR	15" (38 CM) DOUBLE STACKED LED BAR	39" (99 CM) DOUBLE STACKED LED BAR	4" (10 CM) ROUND LED (SOLD IN PAIRS)
						Consult p.144 for more information on these lights			
FRONT PRE-RUNNER OR DUNE BUMPERS	710004881 **PLUS** 715002885 (Power Cable)	NA	710005287 **PLUS** 715002884 (Power Cable)	710004648 **PLUS** 715002884 (Power Cable)	710005041 **PLUS** 715003729 (Power Cable)	715002933 **PLUS** 715003417 (Power Cable)	715002934 **PLUS** 715003417 (Power Cable)	NA	715002935 **PLUS** 715003417 (Power Cable)
LONESTAR RACING FRONT BUMPER	NA	NA	NA	NA	NA	NA	NA	NA	NA
LIGHT SUPPORT BAR	710004881 **PLUS** 715002885 (Power Cable)	710004630 **PLUS** 715002885 (Power Cable)	710005287 **PLUS** 715002884 (Power Cable)	710004648 **PLUS** 715002884 (Power Cable)	710005041 **PLUS** 715003729 (Power Cable)	715002933 **PLUS** 715003417 (Power Cable)	715002934 **PLUS** 715003417 (Power Cable)	715002932 **PLUS** 715003141 (Light Mounting Kit)	715002935 **PLUS** 715003417 (Power Cable)
LONESTAR RACING 40" (102 CM) LED LIGHT BAR RACK	NA	710004630 **PLUS** 715002885 (Power Cable)	NA	NA	NA	NA	NA	NA	NA
LONESTAR RACING LIGHT RACK	NA	NA	710005287 **PLUS** 715002884 (Power Cable)	NA	710005041 **PLUS** 715003729 (Power Cable)	NA	NA	NA	NA

03 ORDER

ORDER ALL PART NUMBERS IN INTERSECTING BOX

*NOTE: For each Light Kit bought, one Light Power Cable or Mounting Kit is required.
When installing more than one lights kits, additionnal Light Power Cable or Mounting Kit is required.

*All lights are intended for Off-Road use only.

MAVERICK X3



NEW

LIGHT SUPPORT BAR

· Sleekly-styled rugged aluminum construction.
· Accommodates light bars and spotlights with or without any roof and windshield combination.
· Full vehicle width to allow the installation of any large LED light bar.
· Required for light installation on vehicle's roof.
· Lights sold separately.

Fits: SSP

715003529

$199.99

NEW

LIGHT POWER CABLE

(Not illustrated)
· Required for installation of Baja Designs LED lights onto roof or bumper.

Fits: SSP

715002885 · 10" (25 cm) & 40" (102 cm) Baja Designs OnX6 LED Light Bars

$84.99

715002884 · Baja Designs XL Sport LED Light & Baja Designs Squadron Sport LED Light

$59.99

715003729 · Baja Designs XL80 LED Light

$89.99

NEW

LIGHT MOUNTING KIT FOR LED LIGHT BAR

(Not illustrated)
· Required for installation of the 39" (99 cm) single and double LED Light Bars.
· Light Support Bar required for installation.

Fits: SSP

715003141

$99.99

NEW

LIGHT POWER CABLE

(Not illustrated)
· Required for installation of 10" (25 cm), 15" (38 cm) and 17" (43 cm) single and double LED Light Bars and 4" (10 cm) Round LED Lights.
· For bumper and roof mounting locations.

Fits: SSP

715003417

$49.99

NEW

LONESTAR RACING 40" (102 CM) LED LIGHT BAR RACK

· Designed for use with 40" (102 cm) Baja Designs OnX6 Arc LED Light Bar.
· Enhances the vehicle's race-inspired look.
· Compatible with Aluminum Roof, Lonestar Racing Aluminum Roof and Sport Roof.
· Not compatible with Racing Side Mirrors.
· Lights sold separately.

Fits: SSP

715003920

$299.99



NEW

LONESTAR RACING LIGHT RACK

· Designed for use with Baja Designs XL80 LED Light and Baja Designs XL Sport LED Light.
· Accommodates up to two pairs of XL Lights.
· Compatible with Lonestar Racing Aluminum Roof, Aluminum Roof and Sport Roof.
· Not compatible with Racing Side Mirrors.
· Lights sold separately.

Fits: SSP

715003948

$299.99





MAVERICK X3

NEW COMING SOON

COMPLETE MTX AUDIO SYSTEM

- Bluetooth 5™ equipped 400(RMS)/800W Audio System by MTX.
- Designed to be Can-Am-tough in the most demanding riding conditions.
- Includes front-dashboard and rear-roll-cage mounted stereo speakers and head unit with an integrated 6.5" (16.5 cm) subwoofer.
- Add the Electronic Device Holder to securely hold your Bluetooth device ready to play your favorite tunes.

715002873



MAVERICK X3



NEW

LIGHTED WHIP FLAG

- A must for riding the dunes.
- 5W Cree LED.
- 5 colored lenses to allow personalization.
- Glow-through whip, quickly-removable and replaceable pole.
- Increases vehicle's visibility.
- Meets most dune-area requirements.
- Die cast aluminum base, acetal hand nut.
- Includes mounting brackets and wiring.
- 4' (1.2 m) flag mounts on top of the roll cage.
- Can be installed on both sides of a vehicle.

Fits: SSP

715002886

$249.99



NEW

ELECTRONIC DEVICE HOLDER

- A great in-ride entertainment system platform.
- Robust injected-polypropylene construction allows for right fit and easy installation.
- Adjustable unit safely holds most tablets and smartphones between dimensions of 5.1" (13 cm) and 10" (25,4 cm) (with protective case).
- Combines seamlessly with Complete MTX Audio System.
- Allows the installation of Garmin Montana 680T GPS.
- Integrated storage (1 Gal (3.8L) capacity) with access to the dash 12V outlet for device charging.

Fits: SSP

715002874

$139.99





FOR OTHER ELECTRONICAL ACCESORIES THAT FIT YOUR MAVERICK X3 CONSULT P.151-154

WINCHES & HITCHES

MAVERICK X3

NEW

REAR RECEIVER HITCH

- E-coated finish.
- Fixed mounting point for trailer ball to provide vehicle with towing capabilities.
- This hitch offers 1,300 lb (590 kg) of towing capacity.
- Rugged lightweight steel construction.

Fits: SSP

715002883 · Black

$119.99

715003938 · Can-Am Red

$144.99



NEW

WINCH ELECTRICAL HARNESS

(Not illustrated)

- Required for winch installation.

Fits: SSP

715003585

$99.99

FOR OTHER ACCESSORIES, CONSULT THE WINCHES & HITCHES SECTION FOR DEFENDER / MAVERICK / COMMANDER P.155-157

MAVERICK X3

NEW

LONESTAR RACING FIRE EXTINGUISHER SUPPORT



- Quick release support that allows you to slide the fire extinguisher out in a matter of seconds in an emergency situation.
- Made of billet anodized black aluminum.
- Fits 1.85" (4.7 cm) tubing.
- Can be fixed everywhere on the cage.
- Provides you with the safety and security of having dependable emergency equipment on board.
- Comes with both billet mounts, quick-pull pin, mounting plate and 2 clamps.
- Fire extinguisher sold separately.
- "Lonestar Racing for Can-Am" branded.

Fits: SSP

715003734

$169.99

NEW



LONESTAR RACING NUMBER PLATE HOLDER

- Includes a pair of sturdy aluminum number plates that mount on either side of the vehicle rear.
- Styling enhances the vehicle's race-inspired look while adding a personal touch.
- Black background.
- Not compatible with LinQ Pivoting Rack.
- Numbered decals are available through SCS Unlimited.
- "Lonestar Racing for Can-Am" branded.

Fits: SSP

715003943

$174.99

NEW

PERFORMANCE TWIN AIR FILTER



- The best choice for the harshest conditions.
- Multiple staged oiled filtering foam for superior dust retaining capacity with high airflow.
- Washable and reusable.

Fits: SSP

715002895

$99.99

NEW

FOAM REPLACEMENT

(Not illustrated)

- Replacement foam for Twin Air Filter.

Fits: SSP

707800713

$39.99



COVER

MAVERICK X3

NEW

TRAILERING COVER



- Can-Am branded 300-denier solution-dyed, water-repellent polyester construction.
- Allows access to fuel and passenger compartments.
- Heavy-duty strap around bottom for secure fit.
- Lined with soft fabric in the windshield area to prevent scratching.
- Fits with or without accessories.
- Airflow design reduces aerodynamic drag and improves fuel economy.

Fits: SSP

715002877

$329.99



DEFENDER
MAVERICK
COMMANDER
ACCESSORIES









HARD CAB ENCLOSURES

ADD FLEXIBILITY AND PRACTICALITY TO YOUR VEHICLE WITH OUR READY-TO-GO HARD CAB ENCLOSURES.

We've got an option that lets you enjoy your Can-Am in perfect comfort, in any season. It's totally up to you… make things really easy and choose one of our ready-to-go, ready-for-anything cab enclosures or create your own from an extensive range of components and accessories.

Mix and match to suit your exact needs by taking advantage of our innovative modular approach to cabs. There's an endless number of possible combinations, so let your imagination run wild.

DEFENDER



NEW

DELUXE XT RIGID CAB ENCLOSURE

- Rigid cab enclosure ideal for Defender XT vehicles that come stock with a roof, but also fits on Base and DPS models with the addition of a roof.
- Offers good driver and passenger protection from the elements.

Included:
- Flip Glass Windshield (715002942)
- Rear Polycarbonate Window (715002922)
- Full Doors with Power Windows (715001968)
- Wiper and Power Windows Cable (710004462)
- Roof Power Cable (715003094)
- Sport Roof Seal Kit (715003126)

Fits: UR (except MAX models)

715003482 · Black

$4,799.99

NEW

PREMIUM RIGID CAB ENCLOSURE

(Not illustrated)

- Provides driver and passenger with the best protection from the elements and the cold, and features the most complete top-of-the-line accessories our product line-up has to offer.

Included:
- Sport Roof with Liner (715002511)
- Flip Glass Windshield with Wiper and Washer Kit (715002441)
- Full Doors with Power Windows (715001968)
- Rear Glass Window with Sliding Panel (715002440)
- Wiper and Powered Windows Cable (710004462)
- Roof Power Cable (715003094)

Fits: UR (except MAX models)

715001966

$5,999.99

NEW

SPORT ROOF SEAL KIT

(Not illustrated)

Fits: UR (except MAX models)

- Necessary when installing individual cab components with Sport Roof (715002430) or when installing the front and rear roof liners (715003098, 715003099).

715003126

$29.99

100% MODULAR. IT'S YOUR CAB, YOUR WAY.

Can-Am's got a wide selection of components, so if you feel like designing your own cab, your own way, our modular system can make it happen. This is flexibility and versatility at work for you. Simply pick the windshield (p.102), doors (p.105), rear window (p.108) and roof (p.96) of your choice, and you're off. Whatever you choose to build your cab with we guarantee the components will work together, because they were designed to work together.

COMMANDER



RIGID CAB ENCLOSURE

- Encloses cab of vehicle to protect rider and passenger from the elements and cold.
- Compatible with gear rail bar with an adaptor.
- Cannot be used with Snorkel Kit (715001978).

CATCH THE VIDEO AT STORE.CAN-AM.BRP.COM

Included:

- Sport Roof (715001679)
- Full Doors (715001301)
- Glass Windshield with wiper package (715001678)
- Rear Window (715001300)

Fits: RU 2014 & up (except MAX models)

715001299

$4,299.99

100% MODULAR. IT'S YOUR CAB, YOUR WAY.

Can-Am's got a wide selection of components, so if you feel like designing your own cab, your own way, our modular system can make it happen. This is flexibility and versatility at work for you. Simply pick the windshield (p.103), doors (p.107), rear window (p.110) and roof (p.98) of your choice, and you're off. Whatever you choose to build your cab with we guarantee the components will work together, because they were designed to work together.

SOFT CAB ENCLOSURES

GET MORE OUT OF YOUR CAN-AM WITH OUR SOFT CAB ENCLOSURES OR CREATE ONE OF YOUR OWN.

Looking for a complete soft cab enclosure? Or do you already have the roof and windshield and are looking to add more cab components? Either way we've got everything you need to begin getting more out of your Can-Am today.

Check out our off-the-shelf soft cabs or choose from a wide selection of soft cab components and you'll see at once that our commitment to complete modularity means everything just works. We love making your life easier.

DEFENDER



SOFT CAB ENCLOSURE

• Protection for rider and passenger from the elements.

Included:
- Bimini Roof with Sun Visor (715002918 (not sold separately)/715003030)
- Full Windshield - Hardcoated (715002432)
- Soft Doors (715002919/715003033)
- Soft Rear Panel (715002920)

Fits: UR (except MAX models)

715002917 • Black

$1,849.99

Fits: UR (MAX models only)

NEW 715003032 • Black

$2,999.99

Included:
- Bimini Roof with Sun Visor (715002849/715003469)
- Full Windshield - Hardcoated (715002432)
- Soft Doors (715003402/715003470)
- Soft Rear Panel (715003403)

Fits: UR (except MAX models)

715003401 • Mossy Oak Break-Up Country Camo

$2,199.99

Fits: UR (MAX models only)

NEW 715003468 • Mossy Oak Break-Up Country Camo

$3,489.99



100% MODULAR. IT'S YOUR CAB, YOUR WAY.

Can-Am's got a wide selection of components, so if you feel like designing your own cab, your own way, our modular system can make it happen. This is flexibility and versatility at work for you. Simply pick the windshield (p.101), doors (p.105), rear window (p.108) and roof (p.96) of your choice, and you're off. Whatever you choose to build your cab with we guarantee the components will work together, because they were designed to work together.

MAVERICK



SOFT CAB ENCLOSURE

- Offers good protection from the elements for driver and passenger.
- Complete with roof, sun visor, doors, and rear panel.
- Cannot be used with Snorkel Kit (715001728).

Included:
- Bimini Roof With Sun Visor (715001198/715001965)
- Soft Doors and Rear Panel (715003451/715003525)
- Full Windshield (715001786)

Fits: RS 2014 & up (except Turbo, X mr, X ds Turbo, X rs Turbo 2016 & up & MAX models)

715003452 • Black

$1,299.99

Fits: RS 2014 & up (MAX models except Turbo, X mr, X ds Turbo & X rs Turbo 2016 & up)

NEW **715003453 • Black**

$1,999.99



SOFT DOORS & REAR PANEL

- Doors and rear panel are made of a solution dyed polyester Sur Last Series 70 for added durability.
- High UV, water and mildew resistance and has excellent tear and abrasion resistance.
- Windows are made of laminated polished vinyl material.
- Aluminum frame.
- Zip-Down windows.
- Quick and easy installation and easy to remove on hot and sunny days.
- Standard automotive type door opening.
- Can only be installed with Bimini Roof.
- Cannot be used with Snorkel Kit (715001728).

Fits: RS 2014 & up (except Turbo, X mr, X ds Turbo, X rs Turbo 2016 & up & MAX models)

715003451 • Black

$769.99

Fits: RS 2014 & up (MAX models except X mr, Turbo, X ds Turbo & X rs Turbo 2016 & up)

NEW **715003525 • Black**

$1,399.99

COMMANDER



SOFT CAB ENCLOSURE

- Offers good protection from the elements for driver and passenger.
- Complete with roof, sun visor, doors, and rear panel.
- Cannot be used with the Snorkel Kit (715001728).
- Cannot be used with half windshields for Commander MAX Limited.

Included:
- Bimini Roof with Sun Visor (715001198/715001965)
- Soft Doors and Rear Panel (715002438/715002106)
- Full windshield (715001697)

Fits: RU 2014 & up (except MAX models)

715003394 • Black

$1,299.99

RU 2014 & up (MAX models only)

NEW 715002105 • Black

$1,999.99



SOFT DOORS & REAR PANEL

- Doors and rear panel are made of Series 70 Sur Last® solution-dyed polyester for added durability.
- High UV, water and mildew resistance, and excellent tear and abrasion resistance.
- Windows are made of laminated polished vinyl material.
- Aluminum frame.
- Zip-down windows.
- Quick and easy installation, and easy to remove on hot and sunny days.
- Standard automotive type door opening.
- Cannot be used with the Snorkel Kit (715001728).
- Cannot be used with half windshields for Commander MAX Limited.
- Can only be installed with Bimini Roof.

Fits: RU 2014 & up (except MAX models)

715002438 • Black

$769.99

Fits: RU 2014 & up (MAX models only)

NEW 715002106 • Black

$1,399.99



DEFENDER

SPORT ROOF

- Robust injection-molded polypropylene construction.
- Provides added protection for rider and passenger from the elements.

Fits: UR (except MAX models)

715002430

$399.99

Fits: UR (MAX models only)

NEW 715003038

$649.99



NEW

DELUXE SPORT ROOF

(Not illustrated)

- Complete roof kit provides extra driver and passenger protection and also diminishes noise within the cab.
- Perfect fit and finish thanks to the seal kit and the liners included.
- Includes Sport Roof (715002430), Sport Roof Seal Kit (715003126), Front Roof Liner (715003098) and Rear Roof Liner (715003099) .

Fits: UR (except MAX models)

715002511

$849.99





NEW

BIMINI ROOF WITH SUN VISOR

- Innovative soft top comes with a hard visor which allows for storage of rolled-up soft top and permits the mounting of the Light Rack for Sport Visor.
- Offers good protection from the elements, falling debris and overhead obstacles, and excellent shade from sun and heat.

Fits: UR (MAX models only)

- UV-resistant, water-repellent and coated weather-though fabric.

715003030 • Black

$479.99

- UV-resistant, water-repellent 600-denier coated fabric.

715003469 • Mossy-Oak Break-Up Country Camo

$549.99



BIMINI ROOF WITH SUN VISOR

- Innovative soft top comes with a hard visor which allows for storage of rolled-up soft top and permits the mounting of the Light Rack for Sport Visor.
- Offers good protection from the elements, falling debris and overhead obstacles, and excellent shade from sun and heat.

Fits: UR (except MAX models)

- UV-resistant, water-repellent 600-denier solution-dyed polyester with Can-Am branding.
- Not compatible for use with soft and rigid full doors.

NEW **715003418 • Black**

$299.99

- UV-resistant, water-repellent 600-denier coated fabric.

715002849 • Mossy Oak Break-Up Country Camo

$419.99



FRONT ROOF LINER

- Vehicle enhancement.
- Integrates seamlessly with roof-mounted light switch.
- Must be used for light installation on the roof.
- Must be used for radio and allows a better integration of Windshield Wiper and Washer Kit (715001638).

Fits: UR

715003098

$199.99

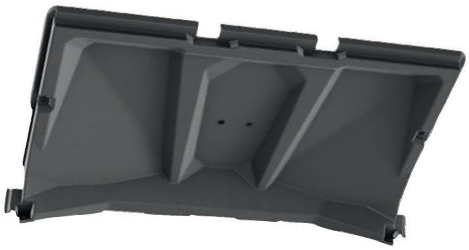

NEW

REAR ROOF LINER

- Quick and easy vehicle enhancement.
- Allows better integration of other accessories installed on the roof.
- Needs to be installed with Sport Roof (715002430).

Fits: UR (except MAX models)

715003099

$249.99



MAVERICK COMMANDER

CATCH THE VIDEO AT STORE.CAN-AM.BRP.COM

LTR LONESTAR RACING for can-am

NEW

LONESTAR RACING ALUMINUM ROOF

- 0.083" (2.1 mm) thick aluminum roof.
- Durable and lightweight.
- Enhances the vehicle's racing appearance thanks to an authentic sporty look combined with unique eye-popping graphics.
- Not compatible with light racks and with full windshields.
- Offers you protection from the elements with a personalized touch.
- "Lonestar Racing for Can-Am" branded.

Fits: RS 2014 & up, RU 2014 & up (except MAX models)

715003590 • Manta Green
715003805 • Octane Blue
715003806 • Can-Am Red

$479.99

Fits: RS, RU (MAX models only)

715003591 • Manta Green
715003807 • Octane Blue
715003808 • Can-Am Red

$699.99



MAVERICK COMMANDER

SPORT ROOF

· Excellent protection from the elements.
· Can be assembled with Light Rack for Cage or Sport Roof.
· Easy and tool-less installation.

Fits: RS 2014 & up, RU 2014 & up

· Injected HDPE construction.

NEW **715003020 • Black**

$429.99

Fits: RS, RU (except MAX models)

· Thermoformed TPO construction.

715003061 • Mossy Oak Break-Up Country Camo
715001444 • Next G-1 Vista Camo

$849.99

715001679 • Black

$499.99



SPORT ALUMINUM ROOF

• Formed aluminum roof 2.25 mm thick.
• Durable and lightweight.
• Sporty look.
• Not compatible with full windshields (715001678, 715001697, 715001698, 715001786, 715001787).
• Not compatible with Intrusion Bar (715002979, 715002980, 715002863).

Fits: RS, RU (except MAX models)

715001659 • Bare Aluminum

$579.99



SPORT ROOF WITH SKYLIGHT

• Roof for protection against the elements without compromising exposure to natural outside light.
• Thermoformed TPO construction.
• Tinted skylight.
• Can be assembled with Light Rack for Sport Roof (715001686 or 715001094).

Fits: RS, RU (MAX models only)

715001967 • Black
715002504 • Light Grey

$849.99

ROLL CAGE COVER

• Plastic cover shields roll cage.
• Gives a color accent and more a finished look.
• Standard on Maverick MAX X rs DPS and XT models.

Fits: RS, RU (MAX models only)

705009840 • Octane Blue
705009841 • Viper Red
705008450 • Black
705008976 • Can-Am Red
705007956 • White
705007955 • Yellow

$129.99



MAVERICK COMMANDER



DELUXE CONVERTIBLE ROOF

- Ultimate in protection, style and integration.
- Twinsheet HDPE manufacturing delivers premium look, and complete coverage when combined with Sport Visor.
- Quick-attach bracket procures fast, easy and tool-less installation and removal.

Fits: RS 2013, RU 2011-2013 (except MAX models)

715001306 • Red
715001478 • Black
715001479 • Yellow

$499.99

Fits: RS 2014 & up, RU 2014 & up (except MAX models)

715001951 • Red
715001949 • Black
715001950 • Yellow
715002503 • Light Grey

$499.99

SPORT VISOR

- Twinsheet HDPE sport visor complete with integrated driver and passenger inner storage pockets.
- Required for installation of Light Rack (715001718 or 715001687).
- Complete with integrated light switch knock outs.
- Creates full roof for maximum element protection when combined with the Deluxe Convertible Roof.
- Easy installation and removal.
- Can be used in conjunction with any windshield.

Fits: RS 2013, RU 2011-2013

- Standard on Limited model.

715000762 • Black

$319.99

Fits: RS 2014 & up, RU 2014 & up

715001952 • Black
715002502 • Light Grey

$319.99

BIMINI ROOF WITH SUN VISOR

- Soft top with hard visor.
- Allows user to stow the soft top on the hard visor.
- Hard visor allows the possibility of installing the light rack.
- UV-resistant, water-repellent 600-denier solution-dyed polyester with Can-Am branding.

Fits: RS, RU (except MAX models)

715001198 • Black

$259.99

NEW 715001316 • Mossy Oak Break-Up Country Camo

$279.99

Fits: RS, RU (MAX models only)

715001965 • Black

$329.99

CATCH THE VIDEO AT STORE.CAN-AM.BRP.COM







SOFT ROOF

- Provides protection from falling debris and overhead obstacles.
- UV-resistant, water-repellent 600-denier solution-dyed polyester with Can-Am branding.
- Velcro straps for quick and easy installation.
- Roof can be folded on the cage.
- Compatible with Light Rack for Cage or for Sport Roof (715001094, 715001686).
- Allows user to stow the soft top on the cage.

Fits: RS, RU (except MAX models)

715003395

$99.99



MESH ROOF

- Provides protection from falling debris and overhead obstacles.
- UV-resistant with Can-Am branding.
- Velcro® straps for quick and easy installation.
- Allows user to stow the soft top on the cage.
- Compatible with Light Rack for Cage or for Sport Roof (715001094, 715001686).

Fits: RS, RU (except MAX models)

715003130

$99.99



DEFENDER



NEW

FLIP GLASS WINDSHIELD WITH WIPER & WASHER KIT

- Curved and laminated glass full windshield in metal frame.
- Provides excellent optical clarity.
- Seals firmly against the cage and protects rider and passenger from the elements while allowing for controlled airflow.
- 3-position flip can be set at fully closed, ¼ open, or fully open.
- Ideal for muddy conditions.
- Gas-shock-assisted operation and pivots on 2 hinges located at the top of the windshield.
- Single-speed wiper with washer fluid dispenser.
- Requires Wiper and Power Cable (710004462) and Roof Power Cable (715003094).
- Not EC compliant.

Fits: UR

715002441

$1,599.99



MUST HAVE

NEW

FLIP GLASS WINDSHIELD

- Curved and laminated glass full windshield in metal frame.
- Provides excellent optical clarity.
- Seals firmly against the cage and protects rider and passenger from the elements while allowing for controlled airflow.
- 3-position flip can be set at fully closed, ¼ open, or fully open.
- Gas-shock-assisted operation and pivots on 2 hinges located at the top of the windshield.
- Ideal for muddy conditions.
- Can be used with Windows Wiper & Washer Kit (715001638).
- Not EC compliant.

Fits: UR

715002942

$1,149.99

NEW

WIPER AND POWER WINDOWS CABLE

(Not illustrated)

- Required to install Full Doors with Power Windows (715001968) and/or Windshield Wiper and Washer Kit (715001638).
- Necessary if you want to build your own cab enclosure from modular components.

Fits: UR

710004462

$59.99

NEW

WINDSHIELD WIPER AND WASHER KIT

- An ideal way to keep your windshield clear in rain, or while riding through mud and water.
- Includes single-speed wiper, washer fluid dispenser and windshields frame mount.
- Must be used with the Glass Windshield (715001303) or Flip Glass Windshield (715002942).
- Requires Wiper and Power Windows Cable (710004462) and Roof Power Cable (715003094).
- Not EC compliant.

Fits: UR

715001638

$549.99



DEFENDER



NEW

FLIP WINDSHIELD - HARDCOATED

- High-impact-resistant Makrolon hardcoated polycarbonate full windshield in metal frame.
- Provides excellent optical clarity and better abrasion resistance.
- Seals firmly against the cage and protects rider and passenger from the elements while allowing for controlled airflow.
- 3-position flip can be set at fully closed, ¼ open, or fully open.
- Gas-shock-assisted operation.
- Ideal for muddy conditions.

Fits: UR

715002442

$849.99



NEW

GLASS WINDSHIELD

- Curved and laminated glass full windshield in metal frame.
- Seals firmly against the cage and protects rider and passenger from the elements while providing excellent optical clarity.
- Must be used with Windshield Wiper and Washer Kit (715001638) to maintain clear visibility during severe riding conditions, such as mud riding.
- Not EC compliant.

Fits: UR

715001303

$899.99



FULL WINDSHIELD-HARCOATED

- High-impact-resistant Makrolon hardcoated polycarbonate full windshield.
- Provides excellent optical clarity and better abrasion resistance.
- Protects driver and passenger from the elements.
- Quick and easy tool-less installation or removal.

Fits: UR

715002432

$539.99



FULL WINDSHIELD

- High-impact-resistant durable polycarbonate full windshield.
- Formulated to be non-yellowing, non-crazing, non-cracking with excellent UV resistance and optical clarity.
- Protects driver and passenger from the elements.
- Quick and easy tool-less installation or removal.

Fits: UR

715002431

$359.99

HALF WINDSHIELD

- High-impact-resistant durable polycarbonate half-windshield.
- Formulated to be non-yellowing, non-crazing, non-cracking with excellent UV resistance and optical clarity.
- Protects driver and passenger from the elements.
- Features reverse angle lip to deflect air flow.
- Quick and easy tool-less installation or removal.
- Not compatible with Soft Doors.

Fits: UR

715002433

$229.99



MAVERICK COMMANDER

FLIP WINDSHIELD

MUST HAVE



- Made of thick 6 mm polycarbonate.
- 3-position flip can be set at fully closed, 1/4 open or 1/2 open.
- Allows rider to obtain the air flow of a half windshield with the protection of a full windshield without changing any parts.
- Top can be removed without tools.
- Windshield pivots on 2 fixed points on cage.
- Ideal for muddy conditions.

Fits: RS	Fits: RU
715002465	715002466
$509.99	$509.99

CATCH THE VIDEO AT STORE.CAN-AM.BRP.COM

HALF WINDSHIELD

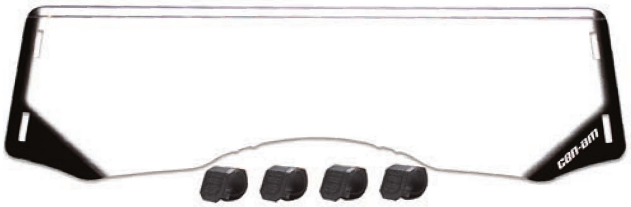

- High-impact-resistant durable polycarbonate.
- Non yellowing, non crazing, non cracking with excellent UV resistance and optical clarity.
- Protects driver and passenger from the elements.
- Features reverse angle lip to deflect air flow.
- Quick-attach brackets procure fast, easy and tool-less installation and removal.
- Not compatible with Full Doors.

Fits: RS	Fits: RU
715001653	715001696
$239.99	$219.99

GLASS WINDSHIELD WITH WIPER & WASHER KIT



- Glass windshield with wipers and washer fluid dispenser.
- Metal frame with D.O.T. approved glass.
- Wide coverage (2 wipers).
- 2-speed wiper control.
- Windshield washer tank integrated in the vehicle service center.
- Requires power cable (715002036) for Commander MAX.

Europe:

- Not EC compliant.
- Requires Defrost, Heat and Ventilation System (715001390) for installation on EC homologated vehicles.

Fits: RU
715001678
$1,169.99



FULL WINDSHIELD - HARDCOATED

- High-impact-resistant Makrolon hardcoated polycarbonate full windshield.
- Quick-attach brackets procure fast, easy and tool-less installation and removal.
- Provides excellent optical clarity and better abrasion resistance.
- Protects driver and passenger from the elements.

Fits: RS	Fits: RU
715001787	715001698
$559.99	$539.99



FULL WINDSHIELD

- High-impact-resistant polycarbonate full windshield.
- Non yellowing, non crazing, non cracking with excellent UV resistance and optical clarity.
- Quick-attach brackets procure fast, easy and tool-less installation and removal.
- Protects driver and passenger from the elements.

Fits: RS	Fits: RU
715001786	715001697
$389.99	$359.99

DEFENDER

SIDE MIRROR
- Molded heavy-duty aluminum mirror.
- Stays in place on rough trails.
- Ball-joint design for steady multi-angle adjustment and outstanding vision.
- Use with or without roof, or windshield.
- Not for road use.
- Fits either side.
- Sold individually.

Fits: UR

715002459

$99.99





PANORAMIC CENTER MIRROR
- Wide-angle convex mirror.
- Offers enhanced visibility.
- Can be used with or without roof or windshield.

Fits: UR

715002512

$79.99

MAVERICK COMMANDER

ALUMINUM SIDE MIRROR
- Molded heavy-duty aluminum mirror.
- Stays in place on rough trails.
- Ball-joint design for steady multi-angle adjustment and outstanding vision.
- Use with or without roof, or windshield.
- Not for road use.
- Fits either side.
- Not compatible with Cab Enclosure.
- Sold individually.

Fits: RS, RU

715002091

$99.99



ALUMINUM CENTER REARVIEW MIRROR
- Molded heavy-duty central aluminum mirror.
- Stays in place on rough trails.
- Ball-joint design for steady multi-angle adjustment and outstanding vision.
- Not compatible with Light Rack for Cage or for Sport Roof (715001686, 715001094).
- Not for road use.

Fits: RS, RU

715002220

$119.99



MIRROR FOR CAB ENCLOSURE
- Large mirror for better visibility.
- Sold in pairs.
- Full Doors (715001301) or Rigid Cab Enclosure (715001299) required for installation.

715002544

$134.99



PANORAMIC CENTER MIRROR
- Convex mirror for wide angle visibility.
- Can be used with or without roof and windshields.

Fits: RS, RU

715000956

$79.99



SIDE MIRROR
- Includes clamp for installation on cage.
- Not compatible with Cab Enclosure.

Fits: RS, RU

Left	Right
715001192	715001418
$99.99	$99.99



REARVIEW MIRROR
- Car-type mirror.
- Can be used with or without roof and windshields.
- Not compatible with Light Rack for Cage or for Sport Roof (715001686, 715001094).

Fits: RS, RU

715001191

$99.99





DEFENDER



NEW

FULL DOORS WITH POWER WINDOWS

- Made from robust high-density polyethylene.
- Offer excellent protection from the elements.
- Easy to remove on hot and sunny days.
- Lockable doors with convenient integrated storage areas.
- Doors' curved-design provides even more roominess.
- Rear hinge wide opening for ease of ingress/egress in the cockpit.
- Power window delivers added ventilation.
- Compatible with all BRP windshields.
- Require Wiper and Power Windows Cable (710004462) and Roof Power Cable (715003094).
- Sport Roof Seal Kit (715003126) is required.

Fits: UR

715001968

$3,499.99



NEW COMING SOON

HALF DOORS

- Half doors made of plastic.
- Metal frame for a higher level of fit and finish and rigidity.
- Rear hinge wide opening for ease of ingress/egress in the cockpit.
- Interior pockets and liners for more protection.

Fits: UR

715003029 • Sold in pairs
715003031 • Includes 4 doors



DEFENDER

SOFT DOORS

- Steel-reinforced frame.
- Offer good protection from the elements.
- Rear hinge wide opening for ease of ingress/egress in the cockpit.
- Zippered windows for added ventilation.
- Easy to remove on hot and sunny days.
- Compatible with all BRP roofs, windshields, and mirrors.
- Not compatible with half windshield.



Fits: UR (except MAX models)

- Coated weather-tough and water-repellent fabric.

715002919 • Black

$939.99

- 600-denier weather-tough and water-repellent fabric.

715003402 • Mossy Oak Break-Up Country Camo

$1,099.99

Fits: UR (MAX models only)

- Coated weather-tough and water-repellent fabric.

NEW **715003033 • Black**

$1,879.99

- 600-denier weather-tough and water-repellent fabric.

NEW **715003470 • Mossy Oak Break-Up Country Camo**

$2,159.99





MAVERICK COMMANDER





SPORT ALUMINUM DOORS

- Made of lightweight aluminum.
- Rotary latch and rear hinge wide opening for ease of ingress/egress in the cockpit.
- Powder coated black.

Fits: RS 2013, RU 2011-2013
715001658
$719.99

Fits: RS, RU 2014 & up
715002115
$719.99

Fits: RS, RU (MAX models only)
715001958
$1,299.99

CATCH THE VIDEO AT STORE.CAN-AM.BRP.COM

PADDED STORAGE FOR SPORT ALUMINUM DOORS

- Padded door cushion with integrated pocket for storage.
- Protects driver and passenger legs from banging against doors during ride.
- Offers storage space for small items.

Fits: RS, RU 2014 & up
715002351 • Front
$144.99

Fits: RS, RU (MAX models only)
715002405 • Rear
$144.99



COMMANDER



FULL DOORS

- Made from durable polyethylene.
- Sliding side glass window for better ventilation.
- Lockable doors.
- Provide the best protection from the elements.
- Compatible with Sport and Deluxe Roofs.
- Keep you warm on cold days.
- Easy to remove on hot and sunny days.
- Can be used with glass windshield or full polycarbonate windshield.
- Do not fit with Bimini Roof, Rear Nets and Flip Windshield.

Fits: RU 2014 & up (except MAX models)
715001301
$2,499.99



REAR WIND PROTECTION

DEFENDER

NEW

REAR GLASS WINDOW WITH SLIDING PANEL

- Made of high-strength tempered glass.
- Ideal for preventing backdraft of dust or rain in harsh environments.
- Sliding panel for enhanced ventilation.
- Quick and easy tool-less installation.
- Sport Roof (715002430 or 715003038) required for installation.

Fits: UR

715002440

$699.99



DEFENDER



REAR WIND SCREEN

- Black full rear mesh reduces windshield backdraft.
- Roll-bar mounted.
- Can-Am branded.

Fits: UR

715002851

$89.99



SOFT REAR WINDOW

- Clear, flexible window made from transparent vinyl.
- Resists cold-cracking to -4°F (-20°C).
- Ideal for preventing backdraft of dust or rain in harsh environments.
- Velcro straps for quick and easy installation.

Fits: UR

715003249

$104.99



REAR GLASS WINDOW

- Made of high-strength tempered glass.
- Ideal for preventing backdraft of dust or rain in harsh environments.
- Quick and easy tool-less installation.
- Sport Roof (715002430 or 715003038) required for installation.

Fits: UR

715003009

$449.99



REAR POLYCARBONATE WINDOW

- High-impact-resistant polycarbonate window.
- Ideal for preventing backdraft of dust or rain in harsh environments.
- Quick and easy tool-less installation.
- Sport Roof (715002430 or 715003038) required for installation.

Fits: UR

715002922

$349.99

SOFT REAR PANEL

- Offers good protection from the elements.
- Resists cold-cracking to -22 °F (-30 °C).
- Compatible with all BRP roofs and doors.
- Easy-to-remove when installed with Bimini Roof.
- Steel-reinforced frame.

Fits: UR

- Coated weather-tough and water-repellent fabric.

715002920 • Black

$199.99

- 600-denier weather-tough and water-repellent fabric.

715003403 • Mossy Oak Break-Up Country Camo

$239.99





MAVERICK COMMANDER



REAR WIND SCREEN

- Full rear mesh coverage reduces windshield backdraft.
- Roll-bar mounted.
- White Can-Am logo on black mesh.
- Not Snorkel Kit compatible.
- Standard on Limited model.

Fits: RS (Turbo, X ds Turbo & X rs Turbo 2016 & up models only)

715002552

$89.99

Fits: RS (except Turbo, X ds Turbo & X rs Turbo 2016 & up models), RU

715003078

$89.99



SOFT REAR WINDOW

- Clear soft window made from see-through vinyl with cold cracking resistance to temperatures down to -4°F (-20°C).
- Prevents dust and rain from drafting back into the vehicle in harsh riding environments.
- Quick installation with 2" (5 cm) Velcro straps.

Fits: RS 2013, RU 2011-2013 (except MAX models)

715001373

$104.99

Fits: RS 2014 & up (except X mr, Turbo, X ds Turbo, X rs Turbo 2016 & up models), RU 2014 & up

715003131

$104.99



REAR WINDOW

- Durable polyethylene frame and polycarbonate window.
- Quick and easy installation.
- Protects rear of cabin, like the rear windshield on a car.
- Same model as in Cab Enclosure.
- Not compatible with Harness Bars (715002953, 715002954, 715002955 and 715002535).
- Compatible with Gear Rail.

Fits: RS 2014 & up (except Turbo, X mr, X ds Turbo, X rs Turbo 2016 & up & MAX models)

715002856

$379.99

Fits: RS (MAX models only except X mr, X ds Turbo, X rs Turbo 2016 & up)

715002857

$399.99

Fits: RU 2014 & up (except MAX models)

715001300

$379.99

Fits: RU (MAX models only)

715002119

$399.99



REAR WINDOW NET

- Net designed to look sharp.
- Rally / Race inspired design.
- Installs in a snap.
- 2" (5 cm) Velcro straps.
- Mounts to roll over protective cage.

Fits: RS 2013, RU 2011-2013

715000832 • Black

$104.99

Fits: RS 2014 & up (except X ds Turbo), RU 2014 & up

715003132

$104.99

DEFENDER

ALUMINUM SKID PLATES

For ultimate durability and strength, all our Aluminum Skid Plates are made with High Strength 5052 H32 Aluminum 3/16" (4.5 mm) thick.

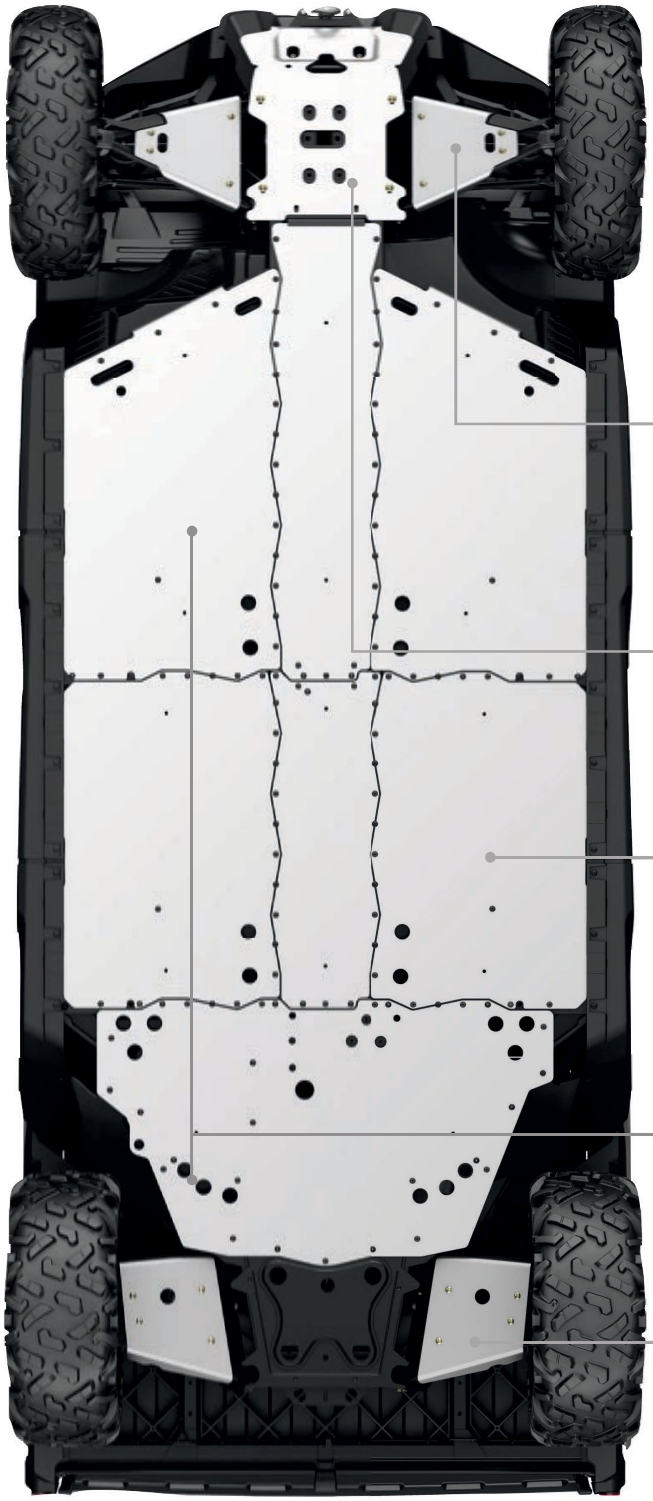

UR (MAX models only)	UR (excpet MAX models)

ALUMINUM SKID PLATE PROTECTION KIT

INCLUDES:

- Front A-Arm Protectors
- Rear A-Arm Protectors
- Front Skid Plate
- Central Skid Plate
- Underbelly Skid Plate Kit

715003712	715003711
$1,609.95	$1,229.99

INDIVIDUAL ALUMINUM SKID PLATES

FRONT A-ARM PROTECTORS

- Extra underside protection for your vehicle's steering mechanism and suspension (A-Arm).
- Can-Am branded.
- Sold in pairs.

715002444	715002444
$144.99	$144.99

FRONT SKID PLATE

- Protects the front underside of your vehicle when riding in rough terrain conditions.
- Adds style to the front of your vehicle.
- Can-Am branded.

715002447	715002447
$184.99	$184.99

CENTRAL SKID PLATE

- Central skid plate kit includes central and lateral skid plates.
- Ultra-durable protection for the underside of your vehicle.
- Makes work easy in more demaning terrain.
- Must be used with Underbelly Skid Plate Kit (715002446).
- For MAX models only.

NEW 715003467	
$379.99	

UNDERBELLY SKID PLATE KIT

- Ultra-durable protection for the underside of your vehicle.
- Makes work easy in more demanding terrain.
- Kit includes central, lateral and rear skid plates.

715002446	715002446
$749.99	$749.99

REAR A-ARM PROTECTORS

- Extra underside protection for your vehicle's suspension (A-Arm).
- Can-Am branded.
- Sold in pairs.

715002445	715002445
$149.99	$149.99

MAVERICK

HMWPE SKID PLATES

Lighter than aluminum. 3/8" (9.5 mm) High Molecular Weight Polyethylene (HMWPE) that glides smoothly and silently over obstacles.

CATCH THE VIDEO AT STORE.CAN-AM.BRP.COM

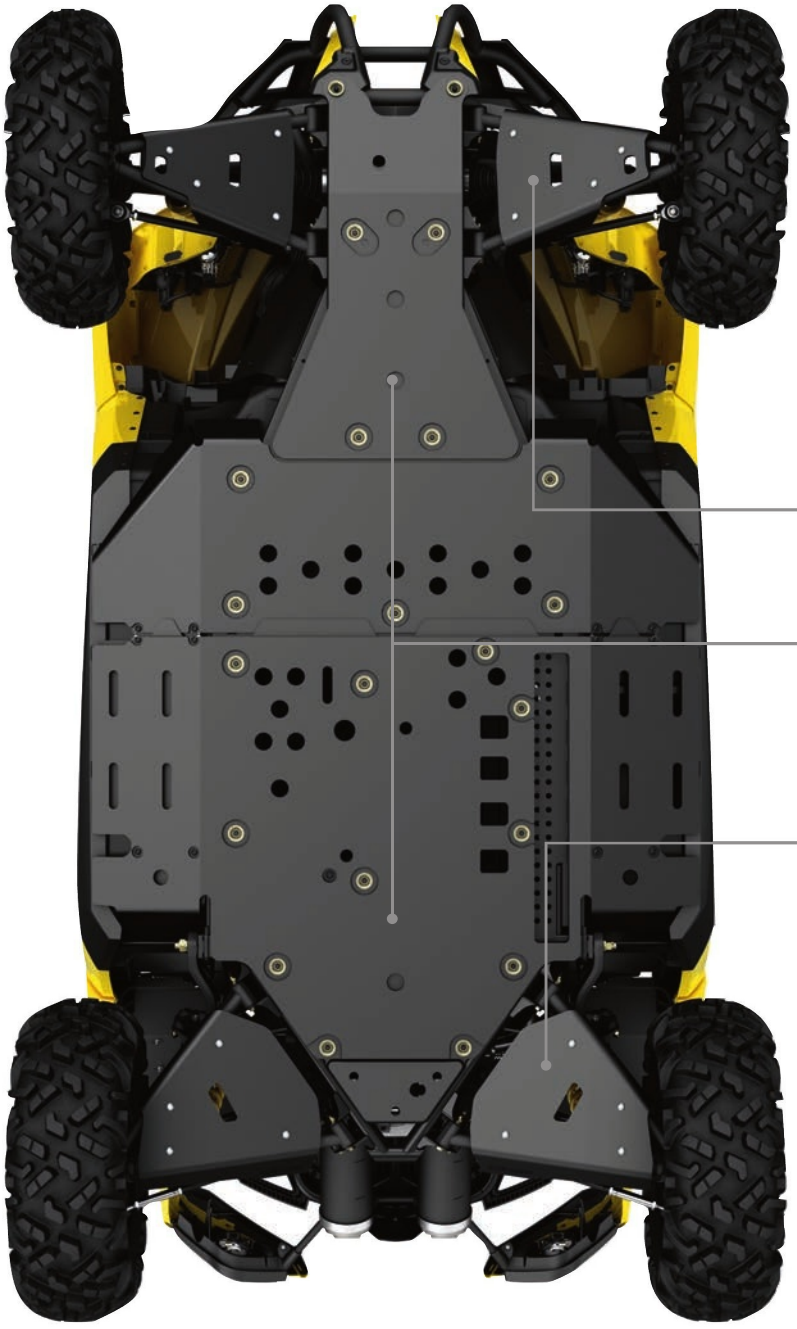

FIND YOUR PLATFORM

RS, RS X RS, RS X MR 2015 & PRIOR (EXCEPT MAX MODELS)	RS, RS X RS 2015 & PRIOR (MAX MODELS ONLY)	RS X XC, RS X C (EXCEPT MAX MODELS)	RS X DS, RS X RS 2016 & UP

HMWPE PLASTIC SKID PLATE PROTECTION KIT

INCLUDES:
- Front A-Arm Protectors
- Rear A-Arm Protectors
- Underbelly Plates

NEW 715004208 $919.99			

INDIVIDUAL HMWPE PLASTIC SKID PLATES

FRONT A-ARM PROTECTORS

715002100 $154.99	715002100 $154.99		715002100 $154.99

UNDERBELLY PLATES

- Includes front, central and rear skid plates.

715002109 $599.99		715002109 $599.99	

REAR A-ARM PROTECTORS

715002101 $164.99	715002101 $164.99		

MAVERICK

ALUMINUM SKID PLATES

For ultimate durability and strength all our Aluminum Skid Plates are made with High Strength 5052 H32 Aluminum 3/16" (4.5 mm) thick.

Maverick MAX illustrated

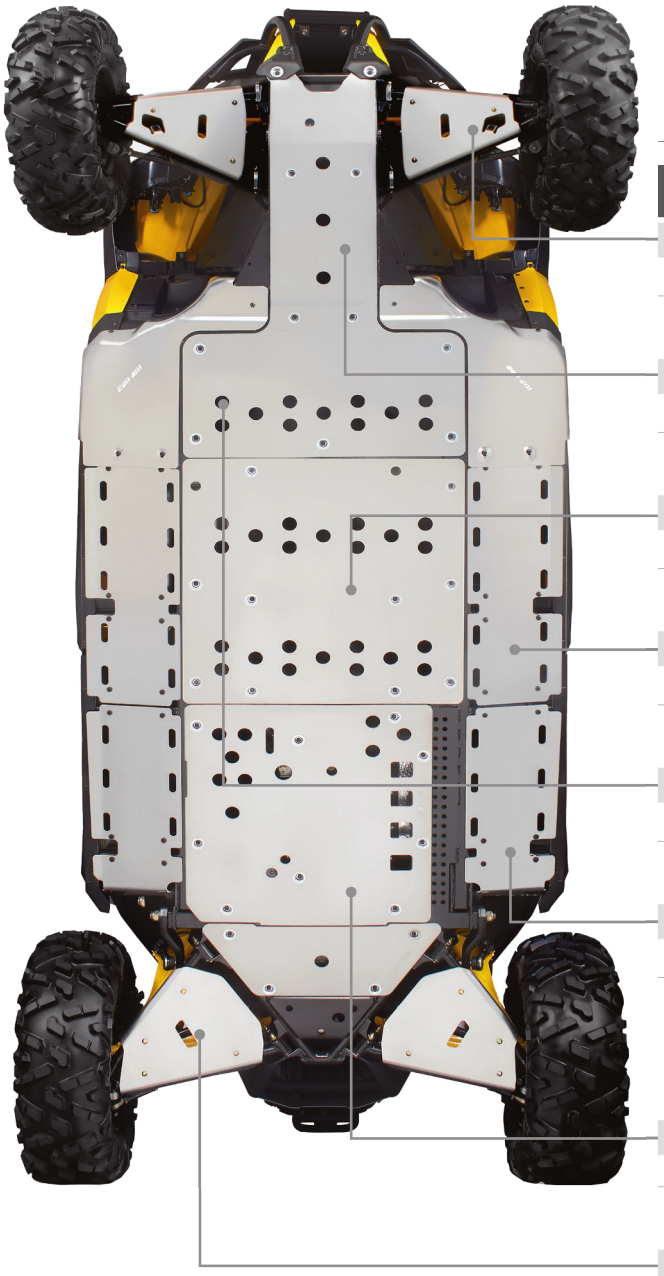

FIND YOUR PLATFORM

RS, RS X RS 2015 & PRIOR (EXCEPT MAX & X MR MODELS)	RS, RS X RS 2015 & PRIOR (MAX MODELS ONLY)	RS X DS, ALL TURBO MODELS (EXCEPT MAX MODELS)	RS X XC, RS XC (EXCEPT MAX MODELS)	RS X DS, RS X RS 2016 & UP (EXCEPT MAX MODELS)	RS X DS, RS X RS 2016 & UP (MAX MODELS ONLY)

ALUMINUM SKID PLATE PROTECTION KIT

INCLUDES:
- Front A-Arm Protectors
- Lateral Central Skid Plates (MAX only)
- Central Skid Plate (MAX only)
- Front Skid Plate
- Rear Lateral Skid Plates
- Rear Skid Plates
- Rear A-Arm Protectors

715002131 $1,109.99	715002132 $1,504.99	715003127 (Turbo) $1,164.94	715002294 $1,109.99	715002514 $1,159.94 715003127 (Turbo) $1,164.94	715002558 $1,554.92 715003313 (Turbo) $1,559.92

INDIVIDUAL ALUMINUM SKID PLATES

FRONT A-ARM PROTECTORS

- Sold in pairs.
- Can-Am logo.

715001639 $144.99	715001639 $144.99	715001639 $144.99	715002021 $144.99	715001639 $144.99	715001639 $144.99

FRONT SKID PLATE

- Can-Am logo.

715001641 $184.99	715001641 $184.99	715001641 $184.99	715001641 $184.99	715001641 $184.99	715001641 $184.99

CENTRAL SKID PLATE - MAVERICK MAX ONLY (INCLUDED IN COMPLETE KIT)

- Can-Am logo.

	715001969 $209.99				715001969 $209.99

LATERAL CENTRAL SKID PLATES - MAVERICK MAX ONLY (INCLUDED IN COMPLETE KIT)

- Sold in pairs.
- Can-Am logo.

	715001970 $184.99				715001970 $184.99

FRONT LATERAL SKID PLATES

- Sold in pairs.
- Can-Am logo.

715002494 $229.99	715002494 $229.99	715002494 $229.99	715002494 $229.99	715002494 $229.99	715002494 $229.99

REAR LATERAL SKID PLATES

- Sold in pairs.
- Can-Am logo.

715001640 $154.99	715001640 $154.99	715003128 (Turbo) $159.99	715001640 $154.99	715001640 $154.99 715003128 (Turbo) $159.99	715001640 $154.99 715003128 (Turbo) $159.99

REAR SKID PLATES

- Can-Am logo.

715001643 $219.99	715001643 $219.99	715002515 $259.99	715001643 $219.99	715002515 $259.99	715002515 $259.99

REAR A-ARM PROTECTORS

- Sold in pairs.
- Can-Am logo.

715001644 $164.99	715001644 $164.99	715002516 $184.99	715002022 $164.99	715002516 $184.99	715002516 $184.99

COMMANDER

ALUMINUM SKID PLATES

For ultimate durability and strength all our Aluminum Skid Plates are made with High Strength 5052 H32 Aluminum 3/16" (4.5 mm) thick.

Commander MAX illustrated

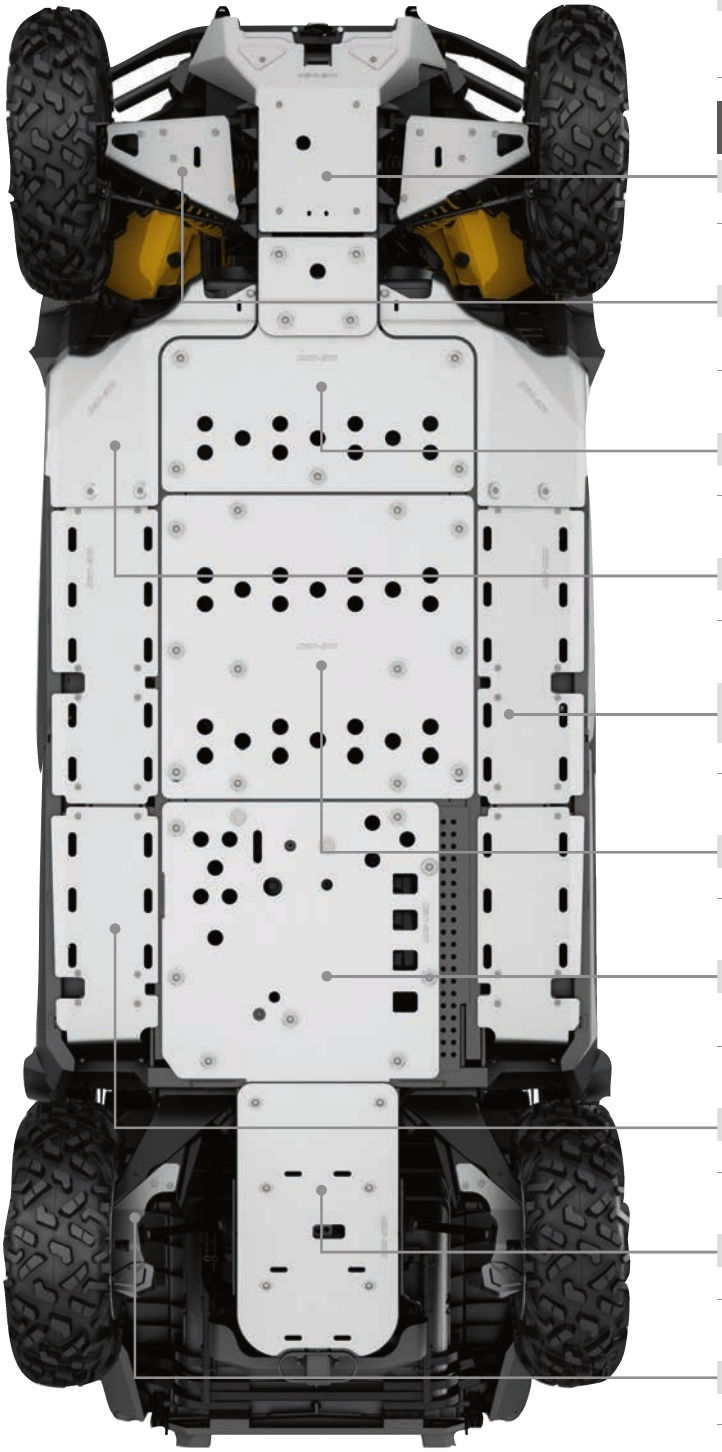

FIND YOUR PLATFORM

RU 2015 & UP (EXCEPT MAX MODELS)	RU 2011-2014 (EXCEPT MAX MODELS)	RU (MAX MODELS ONLY)

ALUMINUM SKID PLATE PROTECTION KIT

INCLUDES: • Front Skid Plate • Central Skid Plate • A-Arm Protectors • Rear Skid Plate • Front Lateral Skid Plates • Trailing Arm Protectors

715002735	715002130	715002133
$1,199.99	$1,014.99	$1,594.99

INDIVIDUAL ALUMINUM SKID PLATES

FRONT SKID PLATE

• Can-Am logo.

715000692	715000692	715000692
$184.99	$184.99	$184.99

A-ARM PROTECTORS

• Aluminum A-arm plates and plastic deflectors provide essential protection and aggressive look. • Sold in pairs. • Can-Am logo.

715000660	715000660	715000660
$124.99	$124.99	$124.99

FRONT CENTRAL SKID PLATE

• Can-Am logo.

715001996		715001996
$154.99		$154.99

FRONT LATERAL SKID PLATES

• Sold in pairs. • Can-Am logo.

715002494	715000950	715002494
$229.99	$209.99	$229.99

LATERAL CENTRAL SKID PLATES - COMMANDER MAX ONLY (INCLUDED IN COMPLETE KIT)

• Sold in pairs. • Can-Am logo.

		715001970
		$184.99

CENTRAL SKID PLATE - COMMANDER MAX ONLY (INCLUDED IN COMPLETE KIT)

• Can-Am logo.

		715001969
		$209.99

CENTRAL SKID PLATE

• Pre-cut holes for fluid and mud drainage, and servicing access. • Can-Am logo. • Direct replacement of factory installed plastic skid.

715001997	715000693	715001997
$164.99	$309.99	$164.99

REAR LATERAL SKID PLATES

• Sold in pairs. • Can-Am logo.

715001640		715001640
$154.99		$154.99

REAR SKID PLATE

• Direct replacement of factory installed plastic skid. • Can-Am logo.

715000694	715000694	715000694
$104.99	$104.99	$104.99

TRAILING ARM PROTECTORS

• Sold in pairs.

715000661	715000661	715000661
$79.99	$79.99	$79.99



DEFENDER

NEW

RANCHER BUMPER

- Heavy-duty, rugged look.
- Front protection for farm, ranch and forestry applications.
- Low front end protection and plates for Side-by-side use in cattle herds.
- Protects both vehicle and the animals.
- Headlight protection.
- Full front coverage.
- Inside and outside anti-corrosion coating with durable powder coat finish.
- Not compatible with Apache 360 LT Track System (715003064).
- Not compatible with Super-Duty Plow Kit (715003416), with or without Super-Duty Plow Hydraulic Angling Kit (715002840).
- Compatible with Alpine Flex Plow Kit (715003108).

Fits: UR

715002834

$449.99





DEFENDER



FRONT BUMPER

- Heavy-duty 1.5" (3.8 cm) diameter steel-tube construction.
- Provides enhanced protection.
- Inside and outside anti-corrosion coating with durable powder coat finish.
- Light-kit compatible.
- Required to install the following accessories: Xtreme Front Bumper (715003005) and Front Corner Protectors (715002833).

Fits: UR

715002418

$229.99

FRONT CORNER PROTECTORS

- Heavy-duty 1.25" (3.2 cm) diameter steel-tube construction.
- Provide enhanced protection for front corners.
- Inside and outside anti-corrosion coating with durable powder coat finish.
- Require Front Bumper (715002418) for installation.
- Sold in pairs.

Fits: UR

715002833

$159.99



DEFENDER



REAR BUMPER

- Heavy-duty 1.5" (3.8 cm) diameter steel construction and integrated tubular design.
- Increased protection of rear box and lower box corner while allowing normal tailgate function.
- Integrated steps.
- Inside and outside anti-corrosion coating with durable powder coat finish.
- Required to install Rear Body Side Protector (715003055).

Fits: UR

715002419

$249.99



XTREME FRONT BUMPER PLATES

- Made of high-strength heavy-gauge steel with rubber pads for increased protection.
- Inside and outside anti-corrosion coating with durable powder coat finish.
- Provide additional front-end protection.
- Require Front Bumper (715002418) for installation.

Fits: UR

715003005

$189.99



REAR BODY SIDE PROTECTORS

- Heavy-duty 1.5" (3.8 cm) diameter steel-tube construction.
- Reliable cargo box protection.
- Inside and outside anti-corrosion coating with durable powder coat finish.
- Integrated brush and low-lying branch deflector.
- Require Rear Bumper (715002419) for installation.
- Compatible with Fender Flare (715002424).
- Sold in pairs.

Fits: UR

715003055

$169.99



FENDER FLARE

- Robust injection-molded polypropylene construction.
- Perfect for keeping mud and debris outside the vehicle.
- Includes front and rear extension, and all mounting hardware.

Fits: UR

715002424

$204.99

DEFENDER



NEW

FRONT BODY SIDE PROTECTORS

- Heavy-duty 1.25" (3.2 cm) diameter steel-tube construction.
- Inside and outside anti-corrosion coating with durable powder coat finish.
- Front side protection for farm, ranch and forestry applications.
- Require Front Bumper (715002418) with Front Corner Protectors (715002833) and Rock Sliders (715002569) or Rock Sliders (715003040 for MAX models) for installation.
- Offer complete front body protection.
- Sold in pairs.

Fits: UR

715003450

$129.99



NEW

FRONT RANCHER BODY SIDE PROTECTORS

- Heavy-duty 1.25" (3.2 cm) diameter steel-tube construction.
- Inside and outside anti-corrosion coating with durable powder coat finish.
- Front side protection for farm, ranch and forestry applications.
- Require Rancher Bumper (715002834) and Rock Sliders (715002569) or Rock Sliders (715003040 for MAX models) for installation.
- Offer complete front body protection.
- Sold in pairs.

Fits: UR

715003617

$159.99

NEW

ROCK SLIDERS

- Protect vehicle's sides and undercarriage against large obstacles.
- Made of heavy-duty 1.5" (3.8 cm) diameter steel tubing.
- Inside and outside anti-corrosion coating with durable powder coat finish.
- Integrated step for easy cargo box access.
- Sold in pairs.

Fits: UR (except MAX models)

715002569 · Black

$299.99

Fits: UR (MAX models only)

715003040 · Black

$359.99



NEW

MUD FLAPS

- Keep mud and debris out of cargo area and protect trailer or vehicles behind you.
- Add aesthetic appeal to your vehicle.
- Made of EPDM rubber.
- Require Rear Bumper (715002419) for installation.
- Sold in pairs.

Fits: UR

715003041

$129.99





DEFENDER

NEW FOR S3 can-am COMING SOON

S3 FRONT WINCH BUMPER

- Made of 1.5" (3.8 cm) diameter steel tubing with durable powder coat finish.
- Specifically developed for mud riding enthusiasts.
- Mounting location for clamped lights.
- Integrated mounting plates accommodate all winches.
- Added body protection.
- Allows higher winch position to avoid winch immersion in mud.
- Not compatible with LinQ Front Rack, Removable Winch Mounting Kit, Super-Duty Plow Push Frame Extension and Plow Pulley.
- "S3 for Can-Am" branded.

Fits: UR

715003779 · Black
715004151 · Combustion Blue



NEW FOR S3 can-am COMING SOON

S3 REAR WINCH BUMPER

- Made of 1.5" (3.8 cm) diameter steel tubing with durable powder coat finish.
- Specifically developed for mud riding enthusiasts.
- Integrated mounting plates for winches and towing anchor points.
- Added body protection.
- Not compatible with Apache 360 LT Track System and Removable Winch Mounting Kit.
- "S3 for Can-Am" branded.

Fits: UR

715003782 · Black
715004130 · Combustion Blue



NEW FOR S3 can-am COMING SOON

S3 NERF BARS

- Made of 1.5" (3.8 cm) diameter steel tubing with durable powder coat finish.
- Specifically developed for mud riding enthusiasts.
- Protect vehicle's lower sides without affecting ground clearance.
- Integrated step makes ingress easier.
- Not compatible with Front Body Side Protectors, Front Rancher Body Side Protectors and Apache 360 LT Track System.
- "S3 for Can-Am" branded.

Fits: UR (except MAX models)

715003783 · Black
715004131 · Combustion Blue





DEFENDER



NEW

DRAGONFIRE FRONT BUMPER

· 1.5" (3.8 cm) diameter steel tubing with durable powder coat finish.
· Delivers additional front protection.
· Rugged look and perfectly contoured to match vehicle's line.
· Integrated mounting plates for the 10" (25 cm) Double Stacked LED Light Bar (60 watts), the 4" (10 cm) Round LED Lights (2 x 25 watts), the HID or Halogen Lights by Hella.
· Not compatible with Removable Winch Mounting Kit, Drop Tow Bar, Higher Front Receiver Hitch, Front and Rear Hitch Drawbar, LinQ Front Rack, Super-Duty Plow Push Frame Extension, Plow Pulley and 15" (38 cm) Double Stacked LED Light Bar (90 watts).
· "DragonFire for Can-Am" branded.

Fits: UR

715003926 · Black
715004168 · Squadron Green

$399.99



NEW

DRAGONFIRE FRONT EXO-FRAME

· 1.5" (3.8 cm) diameter steel tubing with durable powder coat finish.
· Full front-corner side-body and headlight protection.
· Rugged look and perfectly contoured to match vehicle's line.
· Mounting point allows the installation of a round-format light at roll cage base.
· DragonFire Bumper required for installation.
· Sold in pairs.
· "DragonFire for Can-Am" branded.

Fits: UR

715003928 · Black
715004170 · Squadron Green

$199.99

DEFENDER



NEW

DRAGONFIRE SIDE RUNNERS

· 1.25" (3.2 cm) diameter steel tubing with durable powder coat finish.
· Protects vehicle's lower side without affecting ground clearance.
· Rugged look and perfectly contoured to match vehicle's line.
· Slotted steel plate step provides extra grip and makes vehicle's access easier.
· Offer full side protection combine with DragonFire Front & Rear Exo-Frame.
· Sold in pairs.
· "DragonFire for Can-Am" branded.

Fits: UR (exept MAX models)

715003930 · Black
715004172 · Squadron Green

$399.99

NEW

DRAGONFIRE REAR EXO-FRAME

· 1.25" (3.2 cm) diameter steel tubing with durable powder coat finish.
· Full cargo bed side-wall impact protection.
· Rugged look and perfectly contoured to match vehicle's line.
· Sold in pairs.
· Complement with DragonFire Rear Bumper for full rear protection.
· "DragonFire for Can-Am" branded.

Fits: UR

715003929 · Black
715004171 · Squadron Green

$329.99



NEW

DRAGONFIRE SPARE TIRE HOLDER

· 1.5" (3.8 cm) diameter steel tubing with durable powder coat finish.
· Easy-to-install convenient cargo bed spare-tire mount (tire not included).
· Requires the DragonFire Cargo Bed Roll Bar.
· "DragonFire for Can-Am" branded.

Fits: UR (except on Mossy Oak models)

715003931 · Black
715004173 · Squadron Green

$169.99





NEW

DRAGONFIRE CARGO BED ROLL BAR

· 1.75" (4.4 cm) diameter steel tubing with durable powder coat finish.
· Helps protect cab components from cargo load.
· Rugged look and perfectly contoured to match vehicle's line.
· Required to install the DragonFire Spare Tire Carrier.
· Not to be used as a base for mounting lights.
· Not compatible with Rear Cargo Light.
· "DragonFire for Can-Am" branded.

Fits: UR

715003925 · Black
715004167 · Squadron Green

$349.99



NEW

DRAGONFIRE REAR BUMPER

· 1.5" (3.8 cm) diameter steel tubing with durable powder coat finish.
· Rugged look and perfectly contoured to match vehicle's line.
· Integrated step provides easy cargo bed access even when the tailgate is up.
· Not compatible with Mud Flaps.
· "DragonFire for Can-Am" branded.

Fits: UR

715003927 · Black
715004169 · Squadron Green

$349.99



MAVERICK

CATCH THE VIDEO AT STORE.CAN-AM.BRP.COM



NEW

LONESTAR RACING FRONT BUMPER

- Made of 1.5" (3.8 cm) diameter steel tubing with durable powder coat finish with a 1/8" (3 mm) aluminum plate for extra durability.
- Delivers additional heavy-duty protection in extreme driving conditions.
- Enhances the racing look of the vehicle while adding extra protection.
- Features Lonestar Racing logos on the aluminum plate and tubing.
- Compatible with Front Bumper Lights.
- Not winch compatible.
- "Lonestar Racing for Can-Am" branded.
- Not EC compliant.

Fits: RS

715003594 • Octane Blue
715003773 • Can-Am Red
715003593 • Manta Green

$389.99



NEW

LONESTAR RACING REAR BUMPER

- Made of 1.5" (3.8 cm) diameter steel tubing with durable powder coat finish.
- Protects vehicle bodywork and exhaust system.
- Enhances the racing look of the vehicle while adding extra protection.
- Required to install Lonestar Racing Rear Intrusion Bar and to complete full rear protection package.
- Not compatible with winch, hitch and Baja-Style Spare Tire Holder.
- "Lonestar Racing for Can-Am" branded.
- Not EC compliant.

Fits: RS (except Turbo, X ds, X ds Turbo, & X rs Turbo 2016 & up models)

715003602 • Octane Blue
715003804 • Can-Am Red
715003601 • Manta Green

$399.99

Fits: RS (Turbo, X ds Turbo, X rs Turbo 2016 & up)

715003612 • Manta Green
715003613 • Octane Blue

$399.99



MAVERICK



NEW

LONESTAR RACING FRONT INTRUSION BAR

- Made of 1.5" (3.8 cm) diameter steel tubing with durable powder coat finish.
- Enhances the racing look of the vehicle while adding extra protection.
- Matches vehicle styling.
- Compatible with Lonestar Racing Aluminum Roof.
- Not compatible with Aluminum Roof, Sport Visor and Light Rack.
- "Lonestar Racing for Can-Am" branded.

Fits: RS, RU

715003596 • Octane Blue
715003603 • Can-Am Red
715003595 • Manta Green

$399.99



NEW

LONESTAR RACING REAR INTRUSION BAR

- Made of 1.5" (3.8 cm) diameter steel tubing with durable powder coat finish.
- Enhances the racing look of the vehicle while adding extra protection.
- Matches vehicle styling.
- Not compatible with Rear Window (715002856).
- "Lonestar Racing for Can-Am" branded.
- Requires assorted Lonestar Rear Bumper for installation.

Fits: RS (except MAX models)

715003600 • Octane Blue
715003803 • Can-Am Red
715003599 • Manta Green

$289.99

Fits: RS (MAX models only)

715003598 • Octane Blue
715003802 • Can-Am Red
715003597 • Manta Green

$289.99



MAVERICK



FRONT PRE-RUNNER BUMPER

- Made of 1.5" (3.8 cm) diameter steel tube with a 1/8" (3 mm) aluminum plate for extra durability.
- Added heavy-duty protection in extreme conditions.
- Mounting points for lights.
- Requires Mounting Plate for Winch installation (715001699 or 705203196 for Maverick X mr).
- Not EC compliant.

Fits: RS

715002525 • Octane Blue
715002526 • Can-Am Red
715002520 • Manta Green

$389.99

715001645 • Black

$329.99



DUNE FRONT BUMPER

- Made of 1.5" (3.8 cm) diameter steel tube with a 1/8" (3 mm) aluminum plate for extra durability.
- Delivers additional heavy-duty protection in extreme conditions.
- Features a more pronounced attack angle and mounting points for lights.
- Not winch compatible.
- Not EC compliant.

Fits: RS

715001954 • Black

$209.99

MAVERICK

REAR BUMPER

- Extra-durable 1.5" (3.8 cm) diameter steel tube with a 1/8" (3 mm) aluminum plate.
- Sporty look.
- Protects vehicle bodywork and exhaust system.
- Rear receiver hitch compatible.
- Required for Baja-Style Spare Tire Holder installation.
- Not EC compliant.

Fits: RS (except Turbo, X ds, Turbo X ds, & X rs Turbo 2016 & up models)

715002527 • Octane Blue
715002528 • Can-Am Red
715002529 • Manta Green
$359.99

715001646 • Black
$299.99



X DS REAR BUMPER

- Extra-durable 1.5" (3.8 cm) diameter steel tubing with a 1/8" (3 mm) aluminum plate.
- Sporty look.
- Protects vehicle bodywork and exhaust system.
- Rear receiver hitch compatible.
- Baja-Style Spare Tire Holder compatible.
- Does not fit with EC homologated models.

Fits: RS (Turbo, X ds, X ds Turbo & X rs Turbo 2016 & up models only)

715002947 • Octane Blue
715002497 • Manta Green
$359.99





TAIL LIGHT PROTECTORS

- Anti-corrosion coating with durable powder coat finish.
- Rugged style, agressive look.
- Sold in pairs.

Fits: RS

715002982 • Octane Blue
715002981 • Can-Am Red
715002864 • Manta Green
$89.99

715002506 • Black
$74.99

MAVERICK COMMANDER



INTRUSION BAR

- Matches vehicle styling.
- Not windshield compatible.
- Steel intrusion bar.
- Not compatible with Aluminum Sportroof, Sport Visor and Light Rack.

Fits: RS, RU

715002980 • Octane Blue
715002979 • Can-Am Red
715002863 • Manta Green
$319.99

715002505 • Black
$269.99



BAJA-STYLE SPARE TIRE HOLDER

- Durable 1.5" (3.8 cm) diameter steel tubing.
- Holds spare tire in place.
- Custom tie-down strap for fast tire installation or removal.
- Compatible with the Wheel Jack (715001719).
- Rear Bumper required for installation.
- Wheel not included.

Fits: RS

715002957 • Octane Blue
715002956 • Can-Am Red
715002539 • Manta Green
$399.99

715002011 • Black
$329.99



WHEEL JACK

- ProArmor† Quickshot Wheel Jack.
- Helps you change a flat out on the trail.
- Includes a large base for more stability, even in soft soil.
- Includes 17 mm key for ease of wheel removal.
- Fits on Baja-Style Tire Holder.
- Can sit in Commander and Defender bed.
- Wheel not included.

Fits: RS, RU (in Commander bed only), UR (except MAX models)

715001719 • Black
$184.99



MAVERICK COMMANDER



4-POINT HARNESS

- This 4-point harness uses 2" (5 cm) shoulder and hip straps and an automotive style buckle.
- Sewn-on shoulder pads and a leather pad on hips keep you comfortable.
- A removable upper mounting point maintains the removable seat feature.
- Requires 4-point harness bar.
- Not EC compliant.

Fits: RS 2014 & up (except X mr models), RU 2014 & up

715000736 • Driver

$179.99

715002010 • Passenger

$154.99



4-POINT HARNESS BAR - 2-UP AND REAR SEAT OF MAX MODELS

- 1.5" (3.8 cm) diameter, thick-walled steel tubing.
- Designed for use with Can-Am 4-Point Harness (715000736 (driver) and 715002010 (passenger)).
- Not EC compliant.

Fits: RS 2014 & up (except X mr models), RU

715002954 • Octane Blue
715002955 • Can-Am Red
715002535 • Manta Green

$239.99

715002953 • Black

$199.99



4-POINT HARNESS BAR - FRONT SEAT ON MAX MODELS

- 1.5" (3.8 cm) diameter, thick-walled steel tubing.
- Designed for use with Can-Am 4-Point Harness (715000736 (driver) and 715002010 (passenger)).
- Includes bar foam and covers.
- Not EC compliant.

Fits: RS (MAX models except X mr), RU (MAX models only)

715002952 • Octane Blue
715002951 • Can-Am Red
715002541 • Manta Green

$289.99

715002069 • Black

$239.99



MAVERICK COMMANDER

SPORT ROCK SLIDERS FOR MAX

- Protects vehicle's sides and undercarriage against large obstacles.
- Made of heavy-duty 1.5" (3.8 cm) diameter steel tube.
- Anti-corrosion coating with durable powder coat finish.
- Sold in pairs.

Fits: RS, RU (MAX models only)

715002943 • Octane Blue
715002944 • Can-Am Red
715002540 • Manta Green
$389.99

715002088 • Black
$329.99



SPORT ROCK SLIDERS

- Protects vehicle's sides and undercarriage against large obstacles.
- Made of heavy-duty 1.5" (3.8 cm) diameter steel tube.
- Anti-corrosion coating with durable powder coat finish.
- Sold in pairs.

Fits: RS, RU (except MAX models)

715002532 • Manta Green
$309.99

715001649 • Black
$259.99



ROCK SLIDERS

- Protects vehicle's sides and undercarriage against large obstacles.
- Made of heavy-duty 1.5" (3.8 cm) diameter steel tube.
- Anti-corrosion coating with durable powder coat finish.
- Standard on XT-P models.
- Sold in pairs.

Fits: RS, RU (except MAX models)

715003125 • Octane Blue
715003124 • Can-Am Red
715003123 • Manta Green
$309.99

715001722 • Black
$259.99





COMMANDER



XTREME FRONT BUMPER

- Delivers additional heavy-duty protection that works with or without the Front XT Bumper (715000958).
- Anti-corrosion coating with durable powder coat finish.
- Can-Am logo tag.
- Not available on EC homologated vehicles.

Fits: RU

715000951

$309.99



XT FRONT BUMPER

- Made of heavy gauge steel for additional protection.
- XT styled for matching appearance.
- Anti-corrosion coating with durable powder coat finish.
- Effortless mounting.
- Standard on XT, XT-P and Limited models.

Fits: RU

715000958

$229.99

COMMANDER



FRONT LIGHT PROTECTION

- Works in conjuction with Front XT Bumper (715000958), offering protection to front headlights and sporting aggressive look.
- Anti-corrosion coating with durable powder coat finish.
- Integrated Can-Am fastening system provides efficient mounting vs traditional P-clamps.

Fits: RU

715000656

$164.99



FRONT ACCESSORY BAR

- Can-Am casted clamps for easy mounting.
- Anti-corrosion coating with durable powder coat finish.
- Allows installation of Front Rack (715000985) and HID or Halogen lights and LED bars (sold separately).
- Not compatible with XT Front Bumper (715000958).

Fits: RU (except Limited, XT, XT-P and Mossy Oak Hunting Edition models)

715001377 • Black

$104.99



FRONT RACK

- Equipped with genuine Can-Am clamps for easy mounting on required XT Front Bumper (715000958) or Front Accessory Bar (715001377) (sold separately).
- Anti-corrosion coating with durable powder coat finish.
- Allows access to air filter, washer fluid or coolant.
- 75 lbs (34 kg) load capacity.

Fits: RU

715000985

$309.99



XT BOX RAILS

- Add integrated tie down area to your cargo box while enhancing the look.
- Anti-corrosion coating with durable powder coat finish.
- Standard on XT and Limited models.

Fits: RU

715000957

$104.99

REAR BUMPER

- Integrated tubular system provides sporty look while protecting vehicle's bodywork.
- Flips with cargo box and lower tailgate.

Fits: RU

715000657

$229.99

LOWER TAILGATE PROTECTOR

- Aluminum body plating covering lower tailgate provides additional protection and aggressive look.

Fits: RU

715001097

$94.99





Allows you to open lower tailgate.



DEFENDER

LinQ SYSTEM™

NEW

LinQ TAILGATE EXTENSION/DIVIDER

- Adds rear cargo capacity when the tailgate is open.
- Steel-tubing-system-style barrier mounts on top of the bed walls using the easy, tool-less LinQ System.
- Can be mounted to serve as cargo divider at different locations along the bed wall while preventing larger items from falling off the back.
- Stores neatly out of the way and offers additional cab area protection since it can be mounted upside down on the front bed wall as a mini headache rack.
- Inside and outside anti-corrosion coating with durable powder coat finish.

Fits: UR

715002464

$219.99







DEFENDER





BED WALL EXTENDER

- Increases box capacity.
- Quick and easy tool-less modularity.
- Easily-removable rear door can be latched open.
- Variable full or half height settings.
- Foldable top panels come off in seconds.
- Requires Headache Rack (715002423).

Fits: UR

715002421

$699.99

LinQ SYSTEM

LinQ TOOL HOLDER



- Ultra-versatile tool holder.
- Convenient swivel-latch allows tools to be stored in any orientation.
- Suitable for installation onto the cargo walls, Headache Rack (715002423), or Bed Wall Extender (715002421).
- If mounted on the Headache Rack (715002423) or the Bed Wall Extender (715002421), LinQ Adaptor (715003058) is required for installation.
- Sold in pairs.

Fits: UR

715003059

$49.99

LinQ SYSTEM

LinQ ADAPTOR

(Not illustrated)

- Allows the installation of the LinQ Tool Holder (715003059) to the Bed Wall Extender (715002421) or the Headache Rack (715002423).
- Sold in pack of 4.

Fits: UR, SSP

715003058

$24.99



NEW

TONNEAU COVER

- Fitted to cover all of the items in your cargo box thoroughly.
- Prevents splash from entering the cargo box.
- Rolls up to the front.
- Easily removable for quick access.
- Not compatible with accessories that exceed the box height.

Fits: UR (except Mossy Oak Hunting Edition models)

715003017 • Black

$229.99

715003048 • Mossy Oak Break-Up Country Camo

$299.99

CATCH THE VIDEO AT STORE.CAN-AM.BRP.COM



HEADACHE RACK

- Protects cab components from cargo load.
- Increases box capacity when used in tandem with the Bed Wall Extender (715002421).
- Required to install the Bed Wall Extender (715002421) and Gear Rail (715003391).

Fits: UR

715002423

$349.99



DEFENDER

CATCH THE VIDEO AT STORE.CAN-AM.BRP.COM



LinQ SYSTEM

NEW

LinQ LOW PROFILE BASKET

- Low profile, open basket increases cargo space.
- Perfect for easy access to tools, rope, winch and plow accessories.
- Multiple bungee cord and tie-down anchor points.
- Made of impact-resistant injected polypropylene.
- LinQ Cargo Rack (715003443) or LinQ Front Rack (715002420) is required for installation on UR.

Fits: UR

715003027

$159.99



LinQ SYSTEM

NEW

LinQ FRONT RACK

- Rugged looking front rack mounts on top of vehicle hood and provides additional storage.
- Heavy-duty 1.25" (3 cm) diameter steel-tube construction.
- Inside and outside anti-corrosion coating with durable powder coat finish.
- Flip-up configuration provides easy access to service area.
- Allows the installation of LinQ accessories (especially for use with LinQ Low Profile Basket (715003027).
- Kit includes LinQ Base.
- Multiple bungee cord and tie-down anchor points.
- Requires Rancher Bumper (715002834) or Front Bumper (715002418) for installation.
- A great place to store tools while working in the field.
- Not compatible with flip windshields.

Fits: UR

715002420

$329.99



DEFENDER



LinQ SYSTEM™

NEW

LinQ CARGO RACK

- Strong, durable steel rack.
- Easy and tool-less installation thanks to the LinQ System.
- Allows the installation of LinQ accessories.
- 2 racks can be installed at the same time.
- Allows multi-level storage on cargo bed (accommodates 5 Gal (19L) bucket).
- Helps keep cargo securely in place.
- Multiple bungee cord and tie-down anchor points.
- Kit includes LinQ Base.
- Provides more usable space in the cargo box.
- Extends vehicle cargo options.

Fits: UR

715003443

$299.99



LinQ SYSTEM™

NEW

LinQ TIRE HOLDER

- Cargo box spare-tire holder.
- Inside and outside anti-corrosion coating with durable powder coat finish.
- Heavy-duty steel construction.
- Mounts on top of the bed walls using the easy, tool-less LinQ System.
- Uses BRP standard wheel bolt pattern to mount tire (nuts included).
- Accommodates BRP tires up to 28" (tire not included).
- Allows installation in multiple position quickly thanks to the LinQ System.
- Compatible with Bed Wall Extender.

Fits: UR (except Mossy Oak Hunting Edition models)

715003448

$169.99



DEFENDER



NEW

DRIVER UNDERSEAT STORAGE BIN

- Polypropylene-injected 4 Gal (15L) capacity bin fits securely under the driver's seat.
- Front opening for quick and easy access.
- Ideal for storing weather-resistant items, such as ropes, tow straps and winch accessories that are needed at a moment's notice.

Fits: UR

715003399

$99.99



MUST HAVE

NEW

CENTER UNDERSEAT STORAGE BIN

- Polypropylene-injected 2 Gal (8L) capacity storage bin.
- Watertight design keep ice and drinks cold.
- Easy to drain and wash by removing it with integrated handle.
- Accessible by lifting center seat section.

Fits: UR

715003446

$79.99



NEW

REMOVABLE STORAGE BIN - PASSENGER

- Convenient passenger-side under-seat storage polypropylene-injected 3.7 Gal (14L) storage capacity bin.
- Bin installs and removes in a snap and comes with an integrated handle.
- Water-resistant.

Fits: UR

715003314

$69.99

DEFENDER



NEW

CARGO BED RAILS

- Add integrated tie down area to your cargo box while enhancing the look.
- Added cargo box protection.
- Inside and outside anti-corrosion coating with durable powder coat finish.
- Heavy-duty 1" (2.5 cm) diameter steel-tube construction.
- Add height to the bed sidewall and serve as a tie-down anchor for ropes, straps or bungees.
- Not compatible with Bedwall Extender (715002421).
- Sold in pairs.

Fits: UR

715003444

$99.99



NEW

CARGO BED NET

- Solid net designed to hook to the bottom of the cargo box for secure and compact confinement of your cargo.
- Keeps items tightly against the bed floor.

Fits: UR

715003445

$69.99

NEW

DASH STORAGE COMPARTMENT NETS

- Perfect for securing items in the dash storage area.
- Not compatible with Defrost, Heat & Ventillation System (715001978).
- Sold in pairs.

Fits: UR (except XT Cab models)

715003129

$24.99



NEW

DASH STORAGE COMPARTMENT NET FOR HEATING SYSTEM

- Perfect for securing items in the dash storage area.
- To be installed when Defrost, Heat & Ventilation System (715001978) is in place.

Fits: UR

715003544

$24.99



NEW

BACKREST REAR STORAGE

- Netting installs easily.
- Made from polyester that won't discolor.
- Sold in pairs.

Fits: UR (MAX models only)

715003019

$49.99



NEW

LOWER DASHBOARD FOR HEATING SYSTEM

- Replaces the dashboard that comes stock with the vehicle, and features a tablet that makes it possible for driver and passenger to conveniently store small items in the dash.
- To be used when the Defrost, Heat & Ventilation System (715001978) is installed.
- Use together with the Dash Storage Compartment Net for Heating System (715003544) to prevent the items placed in the dash storage compartment from falling.

Fits: UR

715003441

$69.99




can-am
BRP
can-am
can-am

DEFENDER



NEW

GEAR RAIL ADAPTOR

- Allows the installation of the Gear Rail (715003391) directly onto the cargo box without the need for the headache rack.

Fits: UR

715003392

$139.99



NEW

DUAL GUN HOLDER

- Accommodates shotguns, rifles or muzzleloaders.
- Mounts in the cab, on floor board between driver and passenger.
- Rubber pads provide gun protection.
- Easily removed to allow for a center passenger.
- Anti-corrosion coating with durable powder coat finish.
- Comes with all hardware for easy installation.
- Keeps your weapons within easy reach and protected within the cab area.
- Refer to your local regulations governing the transportation of firearms before purchase.

Fits: UR

715003447

$129.99

DEFENDER MAVERICK COMMANDER

Snap-close cover with locking capability



GUN BOOT 6.0 IMPACT† BY KOLPIN†

- Extra room for pistol-grip-type weapons and small bipods.
- Easily fits firearms up to 51" (1.3 m) in total length.
- Provides ample room for 2.4" (60 mm) scopes.
- Hatchback design allows easy access.
- Snap-close cover with locking capability.
- Ergonomically designed handle and molded attachment points for sling.
- Designed to accomodate left and right hand bolt-action rifles and shotguns.
- Requires Gear Rail (715001420) and Gun Boot Mount by Kolpin (715001320 or 715003391) for installation.
- Includes removable, shock absorbing foam and nylon Impact liner for superior interior protection.
- Compatible for dual mount with Additional Gun Boot Mount (715001586).

715001419 • Black

$79.99

GUN BOOT MOUNT BY KOLPIN

- Fits one Kolpin Gun Boot 6.0 Impact (715001419).
- Lightweight and extremely durable.
- Easily adjustable without the use of any tools.
- Offers precision gun angle adjustability.
- Requires Gear Rail (715001320 or 715003391) for installation.

Fits: RS (except Turbo, X ds Turbo, X rs Turbo 2016 & up models), UR, RU

715001420 • Black

$79.99



ADDITIONAL GUN BOOT MOUNT

(Not illustrated)

Fits: RS (except Turbo, X ds Turbo, X rs Turbo 2016 & up models), UR, RU

715001586

$119.99



DEFENDER MAVERICK COMMANDER

GEAR RAIL

- Stationary rail system specially designed for your Side-by-side vehicle.
- Mounts on roll bar.
- Universal mounting options for many Kolpin accessories like Gear Grips, Gun Boot 6.0, Gun Boot Mount and Universal Saw Press.
- Rail is made with heavy-duty 7-gauge extruded anodized black aluminum.
- Includes one versatile Gear Rail Mount by Kolpin (715001422).

Fits: RS (except Turbo, X ds Turbo, X rs Turbo 2016 & up models), RU

715001320 • Black

$219.99

Fits: UR

- Requires Headache Rack (715002423 or 715003392).

715003391

$249.99



DEFENDER MAVERICK COMMANDER

GEAR RAIL MOUNT BY KOLPIN

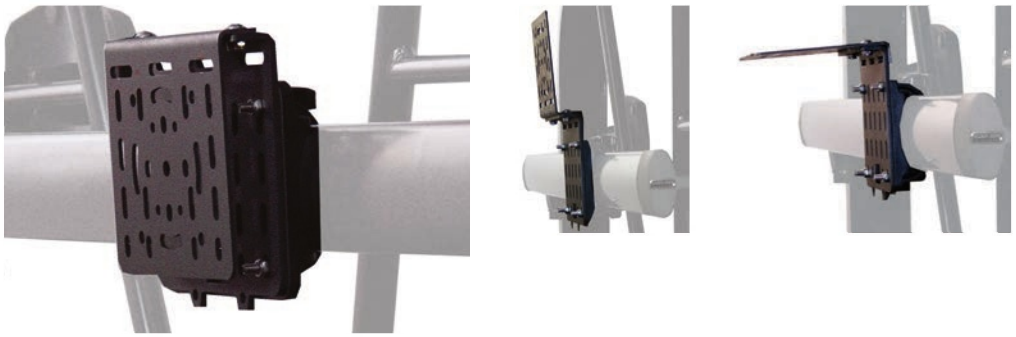

- Accessory bracket for mounting additional accessories to the Gear Rail.
- Includes C-clamp and metal mounting brackets.

Fits: RS (except Turbo, X ds Turbo, X rs Turbo 2016 & up models), UR, RU

715001422

$39.99

UNIVERSAL SAW PRESS BY KOLPIN



- Specially crafted for transporting your chainsaw securely and safely aboard your Side-by-side vehicle.
- Heavy-duty, black powder-coated metal bracket designed to attach any chainsaw model with up to a 20" (51 cm) bar.
- Rubber pads provide cushion and tight fit.
- Hinged design for quick removal.
- Holds saw in vertical position or 45° angle in either direction.
- Requires Gear Rail (715001320 or 715003391).
- Protective sheath included.

Fits: RS (except Turbo, X ds Turbo, X rs Turbo 2016 & up models), UR, RU

715001423 • Black

$104.99

GEAR GRIPS BY KOLPIN



- Durable, flexible grips cushion and protect while providing a custom fit for a variety of items from 1" to 4" (2.5 cm to 10 cm) in diameter.
- Heavy-duty design for carrying bows, fishing poles, rakes, farm tools and more.
- Quick-release button opens grip quickly for easy access to gear.
- Heavy-duty base system built for the toughest adventures.
- Easy installation on tubular racks, extension racks, brackets or bumpers.
- Sold in pairs.

Fits: RS (except Turbo, X ds Turbo, X rs Turbo 2016 & up models), UR (except Mossy Oak models), RU

715001421

$69.99

LinQ MOUNTED GEAR GRIPS BY KOLPIN

(Not illustrated)

- Same features as Gear Grip by Kolpin (715001421).
- Make transporting your tools a snap by combining the Gear Grips with the LinQ System.
- 360° orientation.

Fits: RS (except Turbo, X ds Turbo, X rs Turbo 2016 & up models)

715001351

$104.99

FUEL PACK BRACKET BY KOLPIN



- Easy, quick and secure bracket for your fuel pack that leaves plenty of room for your other gear.
- ¼-turn-action knob allows quick and easy removal of fuel pack from bracket.
- Not EC compliant to attach fuel packs.

Fits: RS (except Turbo, X ds Turbo, X rs Turbo 2016 & up models), UR (except Mossy Oak models), RU

715001427 • Black

$54.99

MAVERICK COMMANDER

GEAR RAIL ADAPTOR FOR REAR WINDOW



- Allows you to install a Gear Rail on a rear window.

Fits: RS (except Turbo, X ds Turbo, X rs Turbo 2016 & up models), RU 2014 & up

715002545

$59.99



COMMANDER

TONNEAU COVER

- Thoroughly covers and secures your cargo box items.
- Prevents splash from entering the cargo box.
- Easily removable for quick access.
- Fits with or without XT Box Rails (715000957).

Fits: RU

715001194 • Black

$259.99



MAVERICK

CARGO BED LINER

- Covers the rear end of your vehicle.
- Includes solid mounting location to attach your stuff.
- Tool-less removal.
- Made of durable polyethylene plastic.

Fits: RS (except Turbo, X ds Turbo, X rs Turbo 2016 & up)

715001904 • Black

$259.99



DEFENDER MAVERICK COMMANDER

LinQ DELUXE MODULAR BAGS

- Tool-less installation and removal.
- Versatile, rugged and spacious.
- Ideal for carrying anything you need in any conditions.
- Weatherproof, scratch-resistant, with molded rubber bottom.
- Central compartment can be used alone on the rack.
- Removable bin.

Fits: RS (except Turbo, X ds Turbo, X rs Turbo 2016 & up models), SSP

715001695 • 12 Gal (44L)

$249.99

715001694 • 20 Gal (73L)

$289.99



CARGO BAG

- Rugged all-purpose cargo bag with rain cover for additional protection against the elements.

Fits: RS, RU, UR

280000539 • Black

$154.99



REAR ARMREST COOLER BOX

- Designed specifically for insertion in the compartment nestled between the 2 rear seats of a Commander MAX or Maverick MAX.
- Magnetic lid makes removal a breeze.
- Can hold 6 cans (5L).

Fits: RS (except Turbo, X ds Turbo, X rs Turbo 2016 & up models), RU

715001961

$44.99



BACKREST REAR STORAGE

- Netting installs and unfastens easily.
- Made from polyester that won't discolor.
- Sold in pairs.

Fits: RS, RU (MAX models only)

715001960

$49.99



CARGO BOX NET

- Solid net designed to hook to the bottom of the cargo box for secure and compact confinement of your cargo.

Fits: RU

715001371 • Black

$59.99



SOFT STORAGE BAG

(Not illustrated)

- 3-section bag.
- Transport gear in a weatherproof bag.
- 6" (15 cm) tall soft cargo bag designed with vehicle's rear rack and rack extensions in mind to maximize potential storage.

Fits: RS (except Turbo, X ds Turbo, X rs Turbo 2016 & up models)

715001934

$134.99

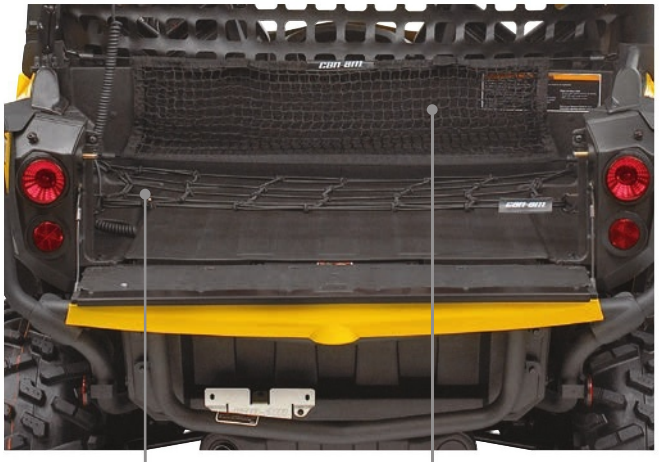

CARGO BOX ELASTIC NET

- Elastic net designed to hook to the bottom of the cargo box.
- Ideal for retaining lighter, irregular-shaped items.

Fits: RU

715001372 • Black

$39.99

CARGO BOX STORAGE NET

- Mesh net.
- Stores items vertically.
- Quick installation.

Fits: RU

715001370 • Black

$59.99



DEFENDER MAVERICK

CATCH THE VIDEO AT STORE.CAN-AM.BRP.COM



MUST HAVE

LinQ SYSTEM™

NEW

LinQ 11.5 GAL (43L) AUDIO CARGO BOX

- An affordable and quick solution for adding music and storage to your next ride. The rear installation does not use up any cab space and allows easy listening at an average speed.
- Mounts on/off easily to hold/carry cargo safely and securely.
- The Bluetooth enabled receiver and 6.5" (16.5 cm) speakers are smartly concealed and integrated in the cover.
- Automatic shut-off function protects your battery by turning the system off after 10 minutes of inactivity.
- Backlit control panel perfect for night riding.
- LinQ Cargo Rack (715003443) is required for Defender.
- Not compatible with Lonestar Racing Rear Intrusion Bar.

Fits: UR, RS (except Turbo, X ds Turbo, X rs Turbo 2016 & up), SSP

715003018

$549.99



LinQ SYSTEM™

LinQ 12 GAL (45L) CARGO BOX

- Holds cargo safely and securely while riding.
- Easy and fast to install and remove from racks thanks to the LinQ System.
- Flip-over cover becomes a tray.
- LinQ Cargo Rack (715003443) is required for UR.

Fits: UR, RS (except Turbo, X ds Turbo, X rs Turbo 2016 & up), SSP

715001936

$209.99

MAVERICK



LinQ 32 GAL (124L) TRUNK BOX

- Equipped with the LinQ System, the rear trunk box plugs in and out in seconds.
- 32 Gal (124L) load capacity with unobstructed space to maximize storage room and access to the trunk's interior.
- Made of injection-molded polyethylene, double walled in critical areas.
- The fully sealed lid protects your belongings from dust, moisture and the elements.
- Requires Wiring Cable (710003419).
- Rear tail light.
- Trunk Box Panels available in many colors to match your vehicle (sold separately).
- Not compatible with Lonestar Racing Rear Intrusion Bar and Baja-Style Spare Tire Holder.

Fits: RS, SSP

715001747 • Black

$349.99

WIRING CABLE FOR LinQ TRUNK BOX

- Required for the tail light to function.

Fits: RS

710003419 • Black

$22.99



LinQ 32 GAL (124L) TRUNK BOX PANELS

- Fit LinQ 32 Gal (124L) Trunk Box (715001747).
- Color pannels to match the LinQ 32 Gal (124L) to your vehicle.

Fits: LinQ 32 Gal (124L) Trunk Box

715001391 • Black
715001392 • Yellow
715001395 • Viper Red
715002481 • White
715002480 • Light Grey
715002984 • Octane Blue
715002985 • Manta Green
715002986 • Can-Am Red

$39.99

EUROPEAN VERSION (EC compliant)

- No rear tail light

715001397 • Black
715001398 • Yellow
715002482 • Light Grey
715002483 • White

LinQ 20 GAL (74L) TRUNK BOX

- Installs without vehicle modification.
- LinQ mount for easy-on, easy-off installation.
- Lockable and weather-resistant.
- Holds cargo safely and securely while riding.
- Not compatible with Lonestar Racing Rear Intrusion Bar and Baja-Style Spare Tire Holder.

Fits: RS (except Turbo, X ds Turbo, X rs Turbo 2016 & up), SSP

715002473

$259.99





LinQ 23 GAL (86L) TRUNK BOX

- Installs without vehicle modification.
- LinQ mounted for easy-on, easy-off installation.
- Lockable and weather-resistant.
- Holds cargo safely and securely while riding.

Fits: RS, SSP

715002474

$279.99



LinQ RACK EXTENSION

- Strong and durable.
- Helps keep cargo securely in place.
- Easy and tool-less installation thanks to the LinQ System.
- Inside and outside anti-corrosion coating with durable powder coat finish.

Fits: RS

715001665 • Black 4" (10 cm)
715001711 • Silver 4" (10 cm)

$174.99

715001671 • Black 6" (15 cm)
715001712 • Silver 6" (15 cm)

$184.99

TO BUILD YOUR LIGHTING SYSTEM, REFER TO PAGES 148-149

MAVERICK COMMANDER

CATCH THE VIDEO AT STORE.CAN-AM.BRP.COM



39" (99 CM) DOUBLE STACKED LED LIGHT BAR (270 WATTS)

NEW PRICE

- Equipped with 54 5W Cree LEDs.
- 24,300 lumens.
- Sits protected inside the cage area to deliver powerful and accurate lighting.
- Includes installation brackets and wiring harness.
- Not compatible with Full Windshield, Flip Windshield and Intrusion Bar.

Fits: RS, RU

715002932

$849.99

LIGHTS UP TO MORE THAN 2900 FT (900 M) IN FRONT OF THE VEHICLE AND AROUND 115 FT (35 M) WIDE ON EACH SIDE

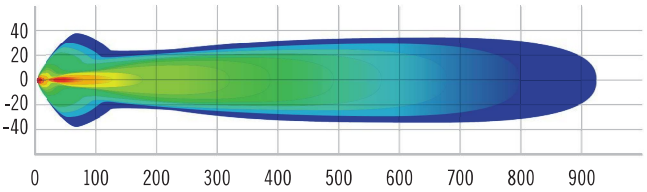

DEFENDER MAVERICK COMMANDER



8,400 lumens

15" (38 CM) DOUBLE STACKED LED LIGHT BAR (90 WATTS)

NEW PRICE

- Equipped with 18 5W Cree LEDs.
- 8,400 lumens.
- Complements the Light Rack for Sport Visor and most bumpers.
- Includes wiring kit and switch.

Fits: UR, RS, RU, SSP

715002934

$359.99

LIGHTS UP TO MORE THAN 1900 FT (580 M) IN FRONT OF THE VEHICLE AND AROUND 65 FT (20 M) WIDE ON EACH SIDE

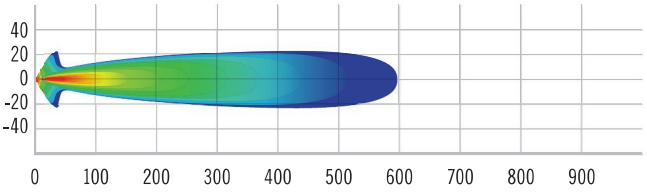



5,400 lumens

10" (25 CM) DOUBLE STACKED LED LIGHT BAR (60 WATTS)

NEW PRICE

- Equipped with 12 5W Cree LEDs.
- 5,400 lumens.
- Packs a big punch for its size.
- Includes wiring kit and switch.
- Not compatible with Front Pre-Runner Bumper (715001645).

Fits: UR, RS, RU, SSP

715002933

$289.99

LIGHTS UP TO MORE THAN 1500 FT (460 M) IN FRONT OF THE VEHICLE AND AROUND 65 FT (20 M) WIDE ON EACH SIDE

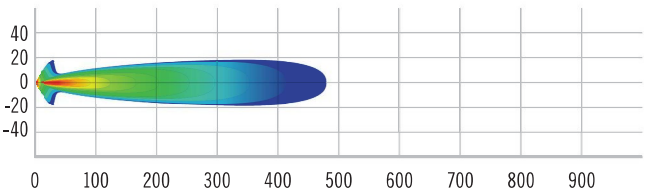

*All lights are intended for Off-Road use only.




HD10

TO BUILD YOUR LIGHTING SYSTEM, REFER TO PAGES 148-149

DEFENDER



LIGHT RACK

- Rugged steel construction serves as both mount and protection for accessory light systems.
- Lights not included.
- Roof front liner is required for installation on the roof (except Cab models or with Deluxe Sport Roof (715002511).
- Roof Power Cable (715003094), Sport Roof (715002430), Bimini Roof with Sun Visor (715002849) , Deluxe Sport Roof (715002511) or Sport Roof for MAX (715003038) required for installation (except Cab models).
- Integrates elegantly and seamlessly into our roof products.

Fits: UR

715002456

$149.99



REAR CARGO LIGHT

- Powerful 55W H3 illumination for rear cargo area.
- Convenient in-dash switch.
- Wiring included.
- Sport Roof (715002430), Deluxe Sport Roof (715002511) or Sport Roof for MAX (715003038) are required for installation.
- Not EC compliant.

Fits: UR

715002422

$129.99

LIGHT KIT POWER CABLE

(Not illustrated)

- Power cable for installation of compatible Can-Am light kits on Front Bumper (715002418) or Rancher Bumper (715002834).

Fits: UR

715002454

$39.99

ROOF POWER CABLE

(Not illustrated)

- Fully integrated with the vehicle.
- Required to install lights on the roof.

Fits: UR

715003094

$39.99

DEFENDER MAVERICK COMMANDER



Luminous flux is 2.5 times higher than a conventional halogen bulb with 35% less energy consumption.

HID LIGHTS BY HELLA†

- Incomparable and powerful HID long range illumination plug-and-play system converts night usage into virtually daytime riding.
- Integrated ballast unit with 3.25" (8 cm) clear glass lens and swivel mounting heavy-duty bracket provides compact design.
- IP67 and IP6K9K rated water and dust proof.
- Highest electromagnetic compatibility rating, i.e. EMC Class 5 according to CISPR 25, for total disturbance-free electronic operation.
- Peak light performance with just 35W.
- Luminous flux is 2.5 times higher than conventional halogen bulb with 35% less energy consumption.
- High vibration resistance with longer lifetime than halogen bulb.
- Constant light intensity even under unsteady power supply voltage.
- Include basic wiring and switch.
- Sold in pack of 2.
- Not EC compliant.

Fits: UR (except bumper position), RS, RU, SSP

715001382

$919.99



HALOGEN LIGHTS BY HELLA

- Deliver long range illumination.
- 3.25" (8 cm) clear glass lens and swivel mounting heavy-duty bracket provides compact design.
- Include basic wiring and switch.
- Sold in pack of 2.
- Not EC compliant.

Fits: UR, RS, RU, SSP

715001383

$174.99

DOME LIGHT

- LED array integrates perfectly with vehicle.
- Wiring included.
- Can be installed on cage or roof, with or without roof liner.

Fits: UR, RS, RU, SSP

715002455

$69.99



*All lights are intended for Off-Road use only.

DEFENDER MAVERICK COMMANDER



2 x 1,800 lumens

4" (10 CM) ROUND LED LIGHTS (2 X 25 WATTS)

- 25W LED spotlights.
- 2 x 1,800 lumens.
- Rugged and waterproof.
- Includes basic wiring and switch.
- Can-Am branded grill.
- Perfect fit with the Light Rack for Sport Visor and most bumpers with Light Mount Kit.
- Sold in pairs.
- Not EC compliant.

NEW PRICE

Fits: UR, RS, RU, SSP

715002935

$359.99



NEW

RAM† LED SPOTLIGHT

- 540 lumens LED light (9 Watt) heavy-duty spotlight standard-equipped with 1" (2.5 cm) diameter rubber-coated double ball and socket system.

Fits: UR, RU 2012 & up

710005423 • Black

$119.99

MAVERICK COMMANDER

CATCH THE VIDEO AT STORE.CAN-AM.BRP.COM

LIGHT RACK FOR SPORT VISOR

- Provides Can-Am Side-by-side vehicles with a custom look.
- Made of rugged aluminum.
- Essential protection for your accessory lighting systems.
- Fully integrated.
- Can be mounted directly on the Sport Visor (715000762, 715001952 or 715002502).
- Wiring included.
- Lights sold separately.

Fits: RS, RU (except Limited models)

715001687 • Black
715001718 • Silver

$229.99



LIGHT RACK FOR CAGE OR FOR ROOFS

- Provides Can-Am Side-by-side vehicle with a custom look.
- Made of rugged aluminum.
- Essential protection for your accessory lighting systems.
- Fully integrated.
- Can be fixed directly to the cage and can be used with Mesh Roof (715003130) or Sport Roof (715003395).
- Wiring included.
- Lights sold separately.

Fits: RS, RU (except Limited models)

715001094 • Silver
715001686 • Black

$299.99



2 x 900 lumens



FRONT BUMPER LIGHTS

- 2 x 900 lumens 10W LED Cree light kit.
- Long-range illumination up to 350' (107 m), drawing less than 1 amp per light.
- Include multi-position clamps that fit on various tubing sizes.
- Not EC compliant.

Fits: RS, RU with XT Front Bumper or Front Accessory Bar

715001741

$259.99

LIGHT MOUNTING KIT

(Not illustrated)

- Required for installation of HID lights, Halogen lights or 4" round LED lights.
- Switch not included.

Fits: RS 2016 & up (X ds 2015 & up), RU (except MAX models)

715001366 • Black

$149.99

Fits: RS 2015 & prior (except X ds & MAX models), RU (MAX models only)

715001713 • Black

$149.99

LIGHT POWER CABLE

(Not illustrated)

- Brings power from rear battery to dash location.
- Includes fuse for safety.

Fits: RS 2015 & prior (except X ds & MAX models), RU (MAX models only)

715002036

$39.99

LIGHT MOUNTING KIT FOR LED LIGHT BAR

(Not illustrated)

- Required for installation of 10" (25 cm), 15" (38 cm) and 17" (43 cm) LED Light Bars on Bumpers or Front Accessory Bar.

Fits: RS, RU

715002175

$149.99

BUILD YOUR LIGHTING SYSTEM – 4 STEPS TO A HASSLE-FREE ORDER

01 FIND YOUR PLATFORM	02 CHOOSE YOUR MOUNT POINT	03 CHOOSE YOUR LIGHTS		
		10" (25 CM) LED BAR	15" (38 CM) OR 17"(43 cm) LED BAR	39" (99 CM) LED BAR (2014 MODELS & UP)
UR	ORIGINAL BUMPER	NA	NA	NA
	FRONT BUMPER OR RANCHER BUMPER	715002933 (Double) **PLUS** 715002454 (Light Mount Kit)	715002934 (Double) **PLUS** 715002454 (Light Mount Kit)	NA
UR (EXCEPT XT CAB)	SPORT ROOF, DELUXE SPORT ROOF OR BIMINI ROOF *Front Roof Liner (715003098) is required (except for Deluxe Sport Roof (715002511)	715002933 (Double) **PLUS** 715002456 (Rack) & 715003094 (Roof Power Cable)	715002933 (Double) **PLUS** 715002456 (Rack) & 715003094 (Roof Power Cable)	NA
	ROOF WITH A DELUXE XT RIGID CAB ENCLOSURE *Front Roof Liner (715003098) is required (except for Deluxe Sport Roof (715002511)	715002933 (Double) **PLUS** 715002456 (Rack)	715002933 (Double) **PLUS** 715002456 (Rack)	NA
	ROOF OF THE PREMIUM RIGID CAB ENCLOSURE	715002933 (Double) **PLUS** 715002456 (Rack)	715002933 (Double) **PLUS** 715002456 (Rack)	NA
UR (XT CAB ONLY)	DELUXE SPORT ROOF	715002933 (Double) **PLUS** 715002456 (Rack)	715002933 (Double) **PLUS** 715002456 (Rack)	NA
RS *For Maverick MAX and Maverick 2015 and prior (except X ds), Light Power Cable (715002036) is required.	ORIGINAL BUMPER	715002933 (Double LED bar) **PLUS** 715002175 (Light Mounting Kit)	715002934 (15" Double LED bar) **PLUS** 715002175 (Light Mounting Kit)	NA
	PRE-RUNNER BUMPER	NA	715002934 (15" Double LED bar) **PLUS** 715002175 (Light Mounting Kit)	NA
	DUNE FRONT BUMPER	715002933 (Double LED bar) **PLUS** 715002175 (Light Mounting Kit)	715002934 (15" Double LED bar) **PLUS** 715002175 (Light Mounting Kit)	NA
	SPORT VISOR	715002933 (Double LED bar) **PLUS** 715001718 (Silver Rack) **OR** 715001687 (Black Rack)	715002934 (15" Double LED bar) **PLUS** 715001718 (Silver Rack) **OR** 715001687 (Black Rack)	715002932 (Double LED bar)
	SPORT ROOF, BIMINI ROOF OR ROLL CAGE	715002933 (Double LED bar) **PLUS** 715001094 (Silver Rack) **OR** 715001686 (Black Rack)	715002934 (15" Double LED bar) **PLUS** 715001094 (Silver Rack) **OR** 715001686 (Black Rack)	
	SPORT ALUMINUM ROOF	NA	NA	
RU *For Commander MAX, Light Power Cable (715002036) is required.	FRONT XT BUMPER FRONT ACCESSORY BAR	715002933 (Double LED bar) **PLUS** 715002175 (Light Mounting Kit)	715002934 (15" Double LED bar) **PLUS** 715002175 (Light Mounting Kit)	NA
	SPORT VISOR	715002933 (Double LED bar) **PLUS** 715001718 (Silver Rack) **OR** 715001687 (Black Rack)	715002934 (15" Double LED bar) **PLUS** 715001718 (Silver Rack) **OR** 715001687 (Black Rack)	715002932 (Double LED bar)
	SPORT ROOF, BIMINI ROOF OR ROLL CAGE	715002933 (Double LED bar) **PLUS** 715001094 (Silver Rack) **OR** 715001686 (Black Rack)	715002934 (15" Double LED bar) **PLUS** 715001094 (Silver Rack) **OR** 715001686 (Black Rack)	
	SPORT ALUMINUM ROOF	NA	NA	

03 CHOOSE YOUR LIGHTS

04 ORDER

HID (SOLD IN PAIRS)	HALOGEN (SOLD IN PAIRS)	4" (10 CM) ROUND LED (SOLD IN PAIRS)
NA	NA	NA
NA	715001383 (Halogen) or 715002935 (LED) **PLUS** 715002454 (Light Mount Kit)	
715001382 (HID), 715001383 (Halogen) or 715002935 (LED) **PLUS** 715002456 (Rack) & 715003094 (Roof Power Cable)		
715001382 (HID), 715001383 (Halogen) or 715002935 (LED) **PLUS** 715002456 (Rack)		
715001382 (HID), 715001383 (Halogen) or 715002935 (LED) **PLUS** 715002456 (Rack)		
715001382 (HID), 715001383 (Halogen) or 715002935 (LED) **PLUS** 715002456 (Rack)		
715001382 (HID), 715001383 (Halogen) or 715002935 (LED) **PLUS** 715001366 or 715001713 (Light Mount Kit) when Light Power Cable (715002036) is required.		
715001382 (HID), 715001383 (Halogen) or 715002935 (LED) **PLUS** 715001366 or 715001713 (Light Mount Kit) when Light Power Cable (715002036) is required.		
715001382 (HID), 715001383 (Halogen) or 715002935 (LED) **PLUS** 715001366 or 715001713 (Light Mount Kit) when Light Power Cable (715002036) is required.		
715001382 (HID), 715001383 (Halogen) or 715002935 (LED) *SEE NOTE FOR 4-LIGHT INSTALL **PLUS** 715001718 (Silver Rack) **OR** 715001687 (Black Rack)		
715001382 (HID), 715001383 (Halogen) or 715002935 (LED) *SEE NOTE FOR 4-LIGHT INSTALL **PLUS** 715001094 (Silver Rack) **OR** 715001686 (Black Rack)		
NA		
715001382 (HID), 715001383 (Halogen) or 715002935 (LED) **PLUS** 715001366 for Commander or 715001713 for Commander MAX (Light Mount Kit)		
715001382 (HID), 715001383 (Halogen) or 715002935 (LED) *SEE NOTE FOR 4-LIGHT INSTALL **PLUS** 715001718 (Silver Rack) **OR** 715001687 (Black Rack)		
715001382 (HID), 715001383 (Halogen) or 715002935 (LED) *SEE NOTE FOR 4-LIGHT INSTALL **PLUS** 715001094 (Silver Rack) **OR** 715001686 (Black Rack)		
NA		

ORDER ALL PART NUMBERS IN THE INTERSECTING BOX

*NOTE: When installing more than one HID, Halogen or LED light kit on light rack, you only need to order one rack and one power cable.



DEFENDER

POWER TILT-BED

- Powerful cargo box tilter with dash integrated switch.

Fits: UR

715000829

$599.99



DIGITALLY ENCODED SECURITY SYSTEM (D.E.S.S.™) KEYS

- Top-security anti-theft protection for your vehicle.
- Encrypted chip technology restricts access to your vehicle's electronic ignition system.
- One vehicle / One code.
- A vibration / shock-resistant ball-and-socket design that ensures a reliable connection.
- Comes with 3 programmable keys:
  - Work key: limits vehicle speed to 40 kph (25 mph) but does not limit engine torque.
  - Normal key: limits vehicle speed to 70 kph (44 mph) and 10% torque reduction.
  - Performance key: No restrictions.

Fits: UR

715002458

$199.99



DEFENDER



NEW

COMPLETE OVERHEAD AUDIO SYSTEM

- Rugged waterproof Jensen† Bluetooth Stereo Audio system offers multi-source input: AM/FM/WB and USB (iPod® and iPhone® ready).
- Convenient white LED-backlit LCD display and buttons.
- Stream from any Bluetooth-enabled device (smartphone, mp3 player).
- Powerful 4x40W amplifier with remote turn-on.
- Voice-control of AVRCP-active device.
- 30 programmable AM/FM stations with auto-store/pre-set scan.
- Separate RCA audio output and input.
- UV-resistant finish / corrosion-resistant components.
- Complete with 4 ultra-sturdy outdoor speakers (2 front and 2 rear) and 4 black speaker boxes.
- Requires Sport Roof (715002430 (except on XT and Mossy Oak Hunting Edition models)), Front Roof Liner (715003098) or Deluxe Sport Roof (715002511) and Roof Power Cable (715003094 (except if you already have a Hard Cab Enclosure (715001966 or 715003482)).

Fits: UR

715002019

$839.99





NEW

OVERHEAD FRONT AUDIO SYSTEM

- Rugged waterproof Jensen† Bluetooth Stereo Audio system offers multi-source input: AM/FM/WB and USB (iPod® and iPhone® ready).
- Convenient white LED-backlit LCD display and buttons.
- Stream from any Bluetooth-enabled device (smartphone, mp3 player).
- Powerful 4x40W amplifier with remote turn-on.
- Voice-control of AVRCP-active device.
- 30 programmable AM/FM stations with auto-store/pre-set scan.
- Separate RCA audio output and input.
- UV-resistant finish / corrosion-resistant components.
- Complete with 2 ultra-sturdy front outdoor speakers and black speaker box.
- Requires Sport Roof (715002430 (except on XT and Mossy Oak Hunting Edition models)), Front Roof Liner (715003098) or Deluxe Sport Roof (715002511) and Roof Power Cable (715003094 (except if you already have a Hard Cab Enclosure (715001966 or 715003482)).

Fits: UR

715003095

$679.99

RAM GPS MOUNT

- Allows for GPS integration onto vehicle.
- Standard AMPS hole pattern for Garmin Cradle.

Fits: UR

715003325

$59.99



3-MODE SWITCH

- Switches quickly and conveniently between normal/work/eco modes.
- Work mode: Reduced throttle sensitivity for smoother acceleration and reduced load impact.
- Eco mode: Increased fuel economy.
- In-dash plug-and-play mount.
- Standard on XT, XT Cab and Mossy Oak Hunting Edition models.

Fits: UR

710004532

$29.99



DEFENDER MAVERICK COMMANDER

NEW

GARMIN MONTANA† 680T GPS

- Rugged and waterproof, the Montana 680T is element-proof.
- 4-inch dual-orientation, sunlight-readable touchscreen and glove-friendly touchscreen display, to give you vivid colors and high-resolution images.
- 8-megapixel autofocus camera automatically geotags photos.
- Tracks both GPS and GLONASS satellites for improved positioning and typically faster fixes.
- Preloaded TOPO maps, plus 1-year BirdsEye Satellite Imagery subscription.
- 3-axis compass with barometric altimeter.
- Specific GPS cradle included (vehicle mounting kit required).
- Includes a preloaded map for US.
- RAM GPS Mount (715003325) required for UR.
- Radio/GPS Console Adapter (715001404) required on RS, RU (except X mr models and with Snorkel Kit (715001728)).

Fits: UR, RS, RU, SSP

715002830

$659.99

EUROPEAN VERSION

- EC compliant.
- Includes preloaded European recreation map.

715003456



NEW

CANADIAN MAP FOR GARMIN MONTANA 680T GPS

(Not illustrated)

- Additional and readily-programmable Canadian basemap for Garmin Montana 680T GPS system.
- Requires Garmin Montana 680T GPS (715002830).

Fits: UR, RS, RU

710005065

$129.99



MAVERICK COMMANDER

MUST HAVE

WET SOUNDS STEALTH 6 ULTRA CAN-AM EDITION SOUND BAR

- Built-in full range class D amplifier (200W RMS, 400W peak).
- Integrated Bluetooth enabled receiver.
- Aux input allows for use with non-Bluetooth devices.
- Automatic shut-off function protects your battery.
- Turns itself off after 10 minutes of inactivity.
- Backlit control panel.
- 2V line-output allows for hooking up another sound bar or adding an external amplifier and speakers.
- Not compatible with Light Rack.

Fits: RS, RU (except Limited models)

715002086

$699.99





MAVERICK COMMANDER

CGX2 CAMERA

- 4K HD and 1080p at 60fps.
- 2" LCD display screen.
- Waterproof housing up to 165 ft (50 m) underwater and 2.4gh waterproof remote.
- Comes with 32GB Micro SD Card Class 10 and 9 mounts.
- WIFI available to control your camera from your smartphone or tablet with the free iCyclops App for IOS and Android.

2866860090

$299.99



MUST HAVE

THERE'S MUCH MORE TO SEE – CHECK OUT THE CYCLOPS 360 ON PAGE 192





FRONT & REAR SPEAKERS

- Great sounding outdoor speakers.
- Kit includes black speaker boxes and plug-and-play wiring.
- Set of 2.
- Standard on Limited model.

Included in the Complete Audio System

Fits: RS, RU

715001309 • Front 5.25" (13 cm) **$139.99**

715001315 • Rear 6.5" (16.5 cm) **$299.99**



ADJUSTABLE LIGHTED WHIP FLAG

- A must for riding the dunes.
- 5W Cree LED.
- 5 colored lenses to allow personalization.
- Glow-through whip, quickly-removable and replaceable pole.
- Increases vehicle's visibility.
- Meets most dune-area requirements.
- Die cast aluminum base, acetal hand nut.
- Includes adjustable mounting brackets and wiring.

Fits: RS, RU

715001651

$279.99

COMPLETE AUDIO SYSTEM

- This integrated Jensen wired remote, amplifier/receiver and speaker combination provides durability, convenience and ease of installation.
- The waterproof design and UV-resistant materials mean no matter how extreme your riding, this system will follow you throughout.
- LED illumination makes it easy to use and to read.
- You can select between AM/FM tuner, 7-channel weather band or listen to your favorites with your IPod (USB 2.0 and MP3/WMA compatible).
- Plug-and-play wiring.
- 50W x4, -10°C to 60°C operating range.
- Radio/GPS Console Adapter (715001404) required (except X mr models and except with Snorkel Kit (715001728)).
- Standard on Limited model.

Fits: RS, RU

715001197

$799.99



RADIO / GPS CONSOLE ADAPTOR

- Update center console for GPS and/or audio system integration.
- Includes a cover for unused GPS or audio system slot.
- Standard on Limited model.

Fits: RS, RU

715001404 • Black

$69.99



DEFENDER MAVERICK COMMANDER

MUST HAVE

DEFROST, HEAT & VENTILATION SYSTEM

- Best integrated system on the market with 3-ventilation speed and in-dash adjustable temperature.
- Adjustable/directional vents.

Fits: RS, RU (except X mr models)

- 6 vents specially positioned for better windshield defrosting/deicing, foot and hand heat.

715001390

$819.99

Fits: UR

- 10 vents specially positioned for better windshield and side windows defrosting/deicing, foot and hand heat.
- Easy-service air filter.
- Once installed, you might want to add storage space with the Lower Dashboard for Heating System (715003441) and Dash Storage Compartment Net for Heating System (715003544).

NEW **715001978**

$1,199.99

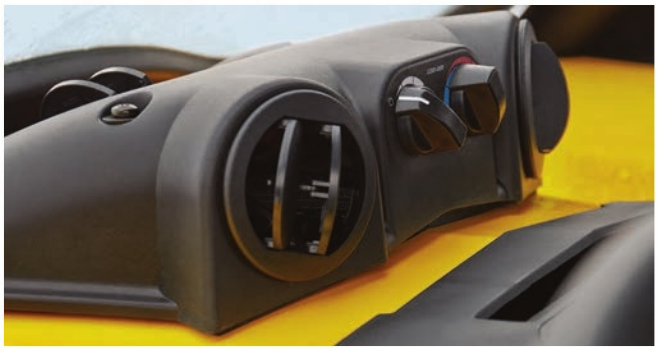





HEATED VISOR OUTLET

- Strategically positioned on vehicle to maintain your agility.
- Optional visor outlet that delivers fog-free riding.
- Quick and easy installation.
- Sold individually.
- Heated Visor not included.

Fits: RS, RU, UR, SSP

715001246

$49.99



DEFENDER MAVERICK COMMANDER

CATCH THE VIDEO AT STORE.CAN-AM.BRP.COM

WARN† PROVANTAGE

- Patented roller disc brake for enhanced winching control.
- Ergonomic clutch handle.
- Three-stage planetary gear train for smooth, efficient operation.
- All-metal gear housing and gears.
- Fully sealed motor and drive train keep the elements out.
- Weather sealed corded remote and dash mounted switch.
- Limited lifetime warranty for mechanical components and 3-year warranty for electrical components.
- EC compliant.



WARN PROVANTAGE 4500-S WINCH

- Pulling strength capability of 4,500 lb (2,041 kg).
- 50 ft. of 7/32" (15.2 m of 5.5 mm) synthetic rope.
- Double-powder-coated hawse fairlead.
- Winch Electrical Harness (715003093) is required for installation on UR base and DPS models.
- Winch Electrical Harness (710005215) is required for installation on RS 2017 & up (except X mr models).

Fits: UR, SSP
715002941
$804.99

Fits: RS, RU
- Mounting Plate is required.
- A Pre-Runner is required for RS X ds, X rs 2016 & up.

715002501
$804.99



WARN PROVANTAGE 4500 WINCH

- Pulling strength capability of 4,500 lb (2,041 kg).
- 55 ft. of 7/32" (16.8 m of 5.5 mm) wire steel cable.
- Roller fairlead.
- Winch Electrical Harness (715003093) is required for installation on UR base and DPS models.
- Winch Electrical Harness (710005215) is required for installation on RS 2017 & up (except X mr models).

Fits: UR, SSP
715002425
$704.99

Fits: RS, RU
- Mounting Plate is required.
- A Pre-Runner is required for RS X ds, X rs 2016 & up.

715002560
$704.99

CAN-AM TERRA BY SUPERWINCH†

- Ergonomic clutch handle.
- Rugged all-steel gears and bushings for more torque and durability.
- 100% mechanical load holding brake.
- Sealed solenoid for all-weather protection.
- Weather sealed corded remote and dash mounted switch.
- EC compliant.

CAN-AM TERRA 45 WINCH BY SUPERWINCH

- Pulling strength capability of 4,500 lb (2,041 kg).
- 47 ft. of 1/4" (14.3 m of 6.3 mm) wire steel cable.
- Heavy-duty 4-way roller fairlead.
- Winch Electrical Harness (715003093) is required for installation on UR base and DPS models (except XT models).
- Winch Electrical Harness (710005215) is required for installation on RS 2017 & up (except X mr models).

Fits: UR, SSP
715002838
$364.99

Fits: RS, RU
- Mounting Plate is required.
- A Pre-Runner is required for RS X ds, X rs 2016 & up.

715002092
$364.99





DEFENDER



REMOVABLE WINCH MOUNTING KIT

- Allows to remove your winch when needed.
- Use in combination with the Multimount Winch Harness (710004869) to quickly and conveniently relocate a front-mounted winch to the rear of the vehicle.
- Not compatible for use with the Lower Front Receiver Hitch.
- Requires Higher Front Receiver Hitch (715003109).

Fits: UR

715001652

$304.99



LOWER FRONT RECEIVER HITCH

- Heavy-duty 1,500 lb (680 kg) towing capacity 2" (5 cm) receiver hitch.
- Expand and enhance functionality by pairing it with Higher Front Receiver Hitch (715003109) and Removable Winch Mounting Kit (715001652 (need to relocate winch from its standard mounting position)).

Fits: UR

715002519

$99.99



HIGHER FRONT RECEIVER HITCH

- Heavy-duty 1,500 lb (680 kg) towing capacity 2" (5 cm) receiver hitch.
- No need to relocate winch from its standard mounting position.

Fits: UR

715003109

$99.99



DROP TOW BAR

- Sturdy 2" (5 cm) ball-less tow bar.
- Conveniently set at standard trailering height.
- Requires Higher Front Receiver Hitch (715003109).

Fits: UR

715002521

$99.99

WINCH ELECTRICAL HARNESS

(Not illustrated)

- Required to install a winch on base and DPS models.

Fits: UR

715003093

$49.99

MULTIMOUNT WINCH HARNESS

(Not illustrated)

- Converts Removable Winch Mounting Kit (715001652) into a practical multimount winch kit.

Fits: UR (except MAX models)

710004869

$49.99

Fits: UR (MAX models only)

NEW **710005082**

$84.99

DEFENDER MAVERICK COMMANDER

FRONT & REAR HITCH DRAWBAR

- Fits 2" (5 cm) receiver hitch that comes standard on Defender and the Lower and Higher Front Receiver Hitches (715002519).
- Hitch ball not included.

Fits: UR, RS, RU

715000972

$79.99



EUROPEAN VERSION

715001473 • Drawbar with 50 mm European ball

NEW

WIRED REMOTE CONTROL

· This kit allows winch owners to add the hand-held remote to vehicles with a stock SuperWinch.
· Works in conjunction with the mini-rocker switch.
· Warn Remote Socket (715003651) is required.
· OEM stock winch and Wired Remote Control are sold separately.
· EC compliant.

Fits: All model

710004887

$19.99



DEFENDER MAVERICK COMMANDER

MULTIMOUNT WINCH KIT

- For use with Warn Winch Kit.
- Versatile system that can be easily mounted at the front or rear of the Can-Am Commander.
- Complete with Can-Am plug-and-play front and rear wire harness.
- Ergonomically formed handle makes it easy to carry from front to rear.
- Front 2" (5 cm) Receiver Hitch (715000663) required for installation.
- Integrated receiver allows for use with Multimount Tow (715001142), sold separately.
- Roller Fairlead (715001119) is required for use with synthetic cable winch.

Fits: RU (MAX models only)
715002068
$324.99
Fits: RU (except MAX models)
715000659
$304.99



WINCH & HITCH SUPPORT PLATE

- Mounting plate for winch and Front 2" (5 cm) Receiver Hitch (715000663).
- Standard on XT, XT-P and Limited models.

Fits: RU
715000704
$94.99



MULTIMOUNT TOW

- 1.5" (3.8 cm) bar system, no ball.
- Requires Multimount Winch Kit (715002068, 715000659).

Fits: RU
715001142
$49.99





2" RECEIVER HITCH

- Heavy-duty 2" (5 cm) receiver hitch.
- Can pull up to 1,300 lb (590 kg).
- Not EC compliant.

Fits: RS (Turbo, X ds Turbo & X rs Turbo 2016 & up models only)
715002517
$189.99

MOUNTING PLATE FOR WINCH

Fits: RS
715001699
$114.99

Fits: RS (X mr models only)
(Not illustrated)
- Required with Front Pre-Runner Bumper.

705203196
$44.99



RUBBER RECEIVER PLUG

- Rubber cap for 2" (5 cm) Receiver Hitch.

705204503
$10.99



WINCH HARNESS

(Not illustrated)
- Required for all Maverick MY17s and up, since the X mr will be the only model standard-equipped with a winch.
- For front winching only (does not fit the multimount kit for rear hitching).

Fits: RS
710005215
$19.99

SYNTHETIC WINCH CABLE

- 50' of 7/32" (15.2 m of 5.5 mm) synthetic cable for Warn winch.
- NOTE: Replacing a wire rope with synthetic cable also requires changing the fairlead to avoid damage and wear to the synthetic cable from the rough surface of the old fairlead.

Fits: with Warn winch
715001118
$139.99



REPLACEMENT WIRE ROPE

- 55' of 7/32" (16.8 m of 5.5 mm) wire rope for Warn winch kit.

Fits: with Warn winch
715001117
$69.99



SYNTHETIC CABLE EXTENSION

- Lightweight 1/4" (6.3 mm) diameter, easy to handle and won't rattle in cargo box.
- Easily attaches to winch cable to provide additional 50' (15.2 m) of distance.
- 4,500 lb (2,041 kg) single line capacity.

Fits: RS, RU, SSP
715001120
$139.99



FRONT 2" (5 CM) RECEIVER HITCH

- Can be used with a standard 2" (5 cm) draw bar.
- Complete with integrated quick locking/release pin for easy installation and removal of draw bar.
- Allows for front-mount pulling/pushing or additional accessory attachments, such as a plow.
- Winch & Hitch Support Plate (715000704) is required for installation.
- Not EC compliant.

Fits: RU
715000663
$94.99



RECEIVER HITCH

- Heavy-duty 2" (5 cm) receiver hitch.
- Can pull up to 1,300 lb (590 kg).
- Not EC compliant.

Fits: RS (except Turbo, X ds Turbo & X rs Turbo 2016 & up models)
715001648 • Black
$184.99



ROLLER FAIRLEAD

- Suggested when changing the wire rope.
- Heavy-duty replacement fairlead for Warn winch.

Fits: with Warn winch
715001119
$54.99



WIRELESS REMOTE CONTROL

- The system is quick and easy to install, thanks to a wiring harness with an integrated antenna and all necessary mounting hardware.
- Allows you to operate your winch from anywhere within a 50' (15.2 m) radius, increasing your recovery options.
- All components are weatherproof.

Fits: with Warn winch
715002542
$179.99





MAVERICK COMMANDER

CATCH THE VIDEO AT STORE.CAN-AM.BRP.COM

BEARD can-am

NEW

BEARD SEATS

- True suspension seating for driver and passenger seats.
- Designed specifically for side-by-side vehicle applications.
- Offer great posture for both driver and passenger during intense riding conditions, thanks to the ideal seat angle and pitch.
- Feature a high and unmatched level of containment support, which gives superior comfort and stability.
- The belt notch allows easy seat removal and added comfort for larger occupants.
- Made of rigid welded-steel frame, covered with sculpted foam and wrapped with a custom cover of premium marine-grade vinyl, which is durable in all driving conditions and resistant to mildew and fading.
- Enhances the racing look of the vehicle.
- No additional seat mounts required.
- Sold in pairs.

Fits: RS, RU

715003607 • Grey
715003609 • Octane Blue
715003608 • Manta Green

$849.99





MAVERICK



YOSHIMURA can-am

YOSHIMURA SLIP-ON EXHAUST

- Developed in collaboration with Yoshimura.
- Made from 304-grade stainless steel.
- Better sounding, better looking and 33% lighter than stock muffler.
- USDF/USDA approved spark arrester.
- Standard on Maverick X rs and Maverick MAX X rs 2016 & up models.
- EPA compliant.
- Not EC compliant.

Fits: RS (Turbo, X ds Turbo, X rs Turbo 2016 & up models)

715003051

$699.99

CATCH THE VIDEO AT STORE.CAN-AM.BRP.COM

COMMANDER



YOSHIMURA can-am

YOSHIMURA SLIP-ON EXHAUST

- Developed in collaboration with Yoshimura.
- Made from 304-grade stainless steel.
- Better sounding, better looking and lighter than stock muffler.
- USDF/USDA approved spark arrester.
- Non EPA compliant (for racing application only).
- Not EC compliant.

Fits: RU

715002089

$469.99



MAVERICK COMMANDER

Keep MUD and debris out of vehicle.



FENDER FLARE

- Fender flare made from injection-molded polypropylene.
- Keeps mud and debris out of vehicle.
- Includes front and rear extensions and all mounting hardware.

Fits: RS

715002414

$204.99



SUPER EXTENDED FENDER FLARE

- Extended Fender Flare made from injection-molded polypropylene.
- Keeps mud and debris out of vehicle.
- Flexible mud flap included.
- Includes front and rear extensions and all mounting hardware.

Fits: RS

715001323

$259.99

XT FENDER FLARE

- Delivers aggressive look while providing added protection from dirt and debris.
- Includes front and rear extensions and all mounting hardware.
- Standard on XT, XT-P and Limited models.

Fits: RU

715002451

$204.99



MAVERICK COMMANDER

NEW

LONESTAR RACING FIRE EXTINGUISHER SUPPORT KIT

- Quick release support that allows you to slide the fire extinguisher out in a matter of seconds in an emergency situation.
- Made of billet anodized black aluminum with Lonestar Racing logo engraved.
- Fits 2" (5 cm) tubing.
- Can be fixed everywhere on the cage.
- Adds racing style while providing you with the safety and security of having dependable emergency equipment on board.
- Comes with both billet mounts, quick-pull pin, mounting plate and 2 clamps.
- Fire extinguisher sold separately.
- "Lonestar Racing for Can-Am" branded.

Fits: RS, RU

715003592

$169.99





FIRE EXTINGUISHER

- Ideal for grease, oil and electrical fires.
- Fits with Lonestar Racing Fire Extinguisher Support Kit.
- Not EC compliant.

295100056 • White
295100004 • Red

$24.99





SNORKEL KIT

- Raises point of engine air intake to cool CVT so vehicle can be semi-submersed in water / mud without taking in water to the engine.
- Not compatible with Rear Nets and Windows, Harness Bars and Cab Enclosures.
- Can be installed on Commander 2012 and up with Dual CVT air Intake (715002467).
- Not EC compliant.
- Used in conjunction with QRS Driven Clutch Upgrade Kit to increase drive belt durability.

Fits: RS (except Turbo, X mr, X ds, X rs 2016 & up & MAX models), RU 2012 & up (except MAX models)

715001728

$599.99



NEW

AIR INTAKE PRE-FILTER FOR SNORKEL KIT

- Adds extra protection to your engine in harsh riding conditions.
- Helps keep air filter cleaner.
- Filter blocks particles larger than 0.007" (0.19 mm).
- Easy, tool-less installation.

Fits: RS (X mr models) or in conjunction with Snorkel Kit (715001728)

715003616

$39.99

DUAL CVT AIR INTAKE

- Complete kit to upgrade CVT cover from 1 inlet - 1 outlet to 2 inlets - 2 outlets.
- Needed to install Snorkel Kit (715001728) on Commander 2012 & up.
- Keeps CVT system cooler in extreme use conditions.

Fits: RU 2012 & up (except Limited & MAX models)

715002467

$299.99



NEW

QRS DRIVEN CLUTCH UPGRADE KIT

(Not illustrated)

- QRS Driven Clutch Upgrade Kit from X ds Turbo model but calibrated for the 1000R (non-turbo) engine (Standard on X mr 2017 & up models).
- Increases drive belt durabilty.
- Use it with the CVT Ventilation Upgrade Kit (715003044) for improved performance and reliability.

Fits: RS (except Turbo models)

715003045

$649.99

NEW

CVT VENTILATION UPGRADE KIT

(Not illustrated)

- CVT inlet with better flow and increased belt ventilation by 10%.
- Increases drive belt durabilty (decreases heat).
- Allows you to get the maximum performance.
- Requires QRS Driven Clutch Upgrade Kit (715003045).
- Standard on X ds Turbo models.
- For use with standard wheel size.

Fits: RS

715003044

$199.99



DEFENDER

S3 FOR can-am

NEW COMING SOON

S3 HIGH CLEARANCE A-ARM FRONT

- Prevents A-arm damage over rough terrain.
- Preserves factory ride quality and turning radius without reducing performance.
- Not compatible with Apache 360 LT Track System and Front A-Arm Protectors.
- "S3 for Can-Am" branded.

Fits: UR

715003784 • Black
715004222 • Combustion Blue



S3 FOR can-am

NEW COMING SOON

S3 HIGH CLEARANCE A-ARM REAR

- Prevents A-arm damage over rough terrain.
- Preserves factory ride quality and turning radius without reducing performance.
- Not compatible with Apache 360 LT Track System and Rear A-Arm Protectors.
- "S3 for Can-Am" branded.

Fits: UR

715003785 • Black
715004223 • Combustion Blue



MAVERICK COMMANDER

FOAM AIR FILTER BY TWIN AIR†

- The best choice for the harshest conditions.
- Multiple staged oiled filtering foam for superior dust retaining capacity with high airflow.
- Washable and reusable.

Fits: RS, RU (except X ds Turbo, Turbo, X rs Turbo 2016 & up models)

715001956

$104.99

Fits: RS (only Turbo models)

715002837

$104.99



715001956



715002837

FOAM REPLACEMENT

(Not illustrated)

Fits: RS, RU

707800582

$25.99

Fits: RS (Turbo models only)

707800682

$39.99

AIR INTAKE PRE-FILTER

- Adds extra protection to your engine in harsh riding conditions.
- Filter blocks particles larger than 0.005" (0.1 mm).
- Necessary to maintain the vehicle warranty when tracks are installed.

Fits: RS (except X mr, X ds Turbo, Turbo, X rs Turbo 2016 & up models), RU

715000953

$39.99



VALVE FOR DONALDSON AIRBOX

(Not illustrated)

- Ensures engine performance in dry sandy conditions.
- Evacuates sand and dust from airbox.
- Reduces the frequency of airbox cleaning.

Fits: RS (Turbo models only)

715003114

$9.99

MAVERICK COMMANDER

RADIATOR PROTECTOR

- Black epoxy electrocoated metal shield that mounts over radiator face to provide protection from stones and branches.

Fits: RU

715001126

$64.99

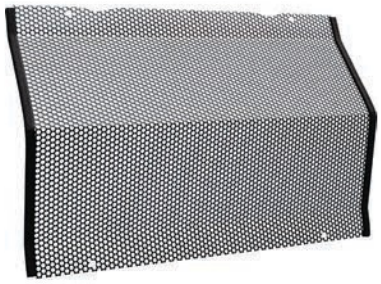

RADIATOR PROTECTOR

- Radiator grill that replaces stock plastic louver.
- Tool-less quick removal renders washing radiator a simple task.
- Made from 5052-grade aluminum.
- Metal shield mounted over radiator face provides protection from stones and branches.

Fits: RS (except X mr models)

715002393

$204.99



FRONT SHOCK COVERS

- Offer added protection in rough terrain and weather conditions.
- Sold in pairs.

Fits: RU

715001324

$39.99



SHOCK COVERS

(Not illustrated)

- Soft cover for shocks with ventilation holes.
- Eliminate dust and dirt intrusion into the shock cylinder, reducing risk of damage.
- Sold in pairs.

Fits: RS (except Turbo, X ds, X mr, X rs Turbo 2016 & up models)

715002368

$39.99

Fits: RS (except XXC, XC, XC DPS models)

715003471

$39.99

SPORT STEERING WHEEL

- Polyurethane soft-touch black grip highlighted with silver spokes.
- Standard on X, XT, XT Mossy Oak Hunting Edition, XT-P, X rs, X ds, X xc and Limited models.

Fits: RS, RU

715001134

$149.99



FRONT SWAY BAR

- Enhances vehicle performance and control during hard cornering.
- Standard on XT and XT-P models.

Fits: RU

715001125

$124.99





FOX PERFORMANCE FRONT SHOCKS

- Fox Piggyback racing shocks.
- Include rebound and high/low speed compression adjustments.
- Sold in pairs.
- Standard on XT and XT-P models.
- Need to be installed with Fox Performance Rear Shocks (715001023).

Fits: RU (except Limited & MAX models)

715001022

$1,019.99



FOX PERFORMANCE REAR SHOCKS

- Fox 2.0 Position Sensitive racing shocks.
- Include rebound and high/low speed compression adjustments.
- Sold in pairs.
- Standard on XT and XT-P models.
- Need to be installed with Fox Performance Front Shocks (715001022).

Fits: RU (except Limited & MAX models)

715001023

$1,129.99

APACHE 360 LT TRACK SYSTEM



DEFENDER MAVERICK COMMANDER

APACHE 360 LT TRACK SYSTEM

- Highly engineered track system provides ultimate traction in snow and any other type of ground surface for your Can-Am vehicle.
- Front track design reduces vibration, eases turning and enhances performance in any hard packed conditions. The angled front lugs minimize resistance, and the way the lugs overlap over the wheels ensures smooth rolling. The rear track pattern and lug height are balanced for greater traction.
- Unique adjustable contact patch enables you to tackle the toughest conditions year round. This new system has two settings: the user can choose a better attack angle in rough terrain or greater flotation in deep snow.
- Thanks to the heightened rubber over molded heavy-duty double bearing wheels and offset wheel spacing, friction and vibration are reduced to a minimum while ensuring reliability.
- Easy installation and quick conversion from tires to tracks once the Apache 360 LT Mounting Kit is installed (sold separately).
- The DPS module, included in the Apache 360 LT Mounting Kit, optimizes your Dynamic Power Steering (DPS) performance, maximizing steering agility at lower speeds while providing firmer steering at cruising speeds. It also provides a speed correction factor for the speedometer.
- Heavy-duty components ensure reliability and the design offers excellent acceleration, turning, braking and side-hilling performance.
- Larger contact patch than the Apache 360 Track System by 15 in² (97 cm²) at front and 41 in² (265 cm²) at back.
- Higher ground clearance than the Apache 360 Track System by 3/4" front and 1.25" rear.
- Higher rear angle of attack.
- Apache 360 LT Mounting Kit is required.
- EC compliant.

Fits: UR, RU, RS

715003064

$4,699.99

APACHE 360 LT MOUNTING KIT

(Not illustrated)

- Required to install Apache 360 LT Track System (715003064).

Fits: UR

- Air intake pre-filter is included.

715002427

$549.99

Fits: RU

- DPS module is included for Commander 2013 and up.
- EC compliant.

715003062

$459.99

Fits: RS (except X ds Turbo, X rs Turbo 2016 & up models)

715003013

$649.99

Fits: UR, RS (X ds Turbo, X rs Turbo 2016 & up models only)

715003478

$649.99

AIR INTAKE PRE-FILTER

- Adds extra protection to your engine in harsh riding conditions.
- Filter blocks particles larger than 0.005" (0.1 mm).
- Necessary to maintain the vehicle warranty when tracks are installed.

Fits: RS (except X mr, X ds Turbo, Turbo, X rs Turbo 2016 & up models), RU

715000953

$39.99



NEW

AIR INTAKE PRE-FILTER

- Adds extra protection to your engine in harsh riding conditions.
- Helps keep air filter cleaner.
- Filter blocks particles larger than 0.007" (0.19 mm).
- Easy, tool-less installation.
- Included in the Apache 360 LT Mounting Kit (715002427).

Fits: UR

715003483

$39.99





HIGHLY ENGINEERED TRACK DESIGN PROVIDES ULTIMATE TRACTION IN ANY TERRAIN AND LOWEST STEERING EFFORT.

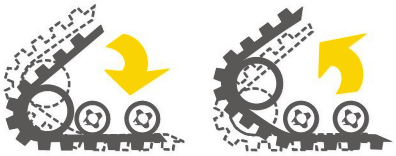

Unique adjustable contact patch system to tackle the toughest year-round conditions.



Easy installation and quick conversion from tires to tracks.

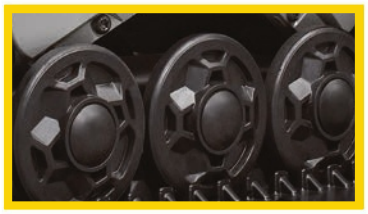

Rubber over molded heavy-duty double bearing wheels and offset wheel spacing reduce friction and vibration while ensuring reliability.

ALPINE FLEX PLOW



DEFENDER MAVERICK COMMANDER

72" (183 CM) ALPINE FLEX PLOW KIT

- 72" (183 cm) blade made of flexible high-impact-resistant UHMW thermoplastic.
- Impressive flexibility prevents plow damage during accidental impacts.
- Impact absorption properties return blade to its original shape.
- Rearward release action greatly reduces transmission of impact to driver or unit.
- Fast and easy attach/detach mounting system.
- Conveniently-placed blade-turning mechanism eliminates having to bend down to adjust blade angle.
- High-pivot design keeps plow on surface.
- Compatible with all Alpine Flex Plow accessories to further enhance plow versatility.
- Includes Plow Roller Fairlead and cable saver limit switch.

THIS KIT INCLUDES

72" (183 cm) Alpine Flex Plow (715001972), Alpine Flex Plow Push Frame (715002461), Alpine Flex Plow Mounting Kit (715002460)	72" (183 cm) Alpine Flex Plow (715001972), Alpine Flex Plow Push Frame (715001992), Alpine Flex Plow Mounting Kit (715001957)	72" (183 cm) Alpine Flex Plow (715001972), Alpine Flex Plow Push Frame (715002461), Alpine Flex Plow Mounting Kit (715003524)
Fits: UR	**Fits: RU**	**Fits: RS**
715003108	**715003150**	**715003545**
$1,404.97	**$1,404.97**	**$1,404.97**



ALPINE FLEX PLOW ACCESSORIES

ALPINE FLEX PLOW PUSH FRAME EXTENSION
(Not illustrated)
- Extension for Alpine Flex Plow Push Frame for use with the Apache 360 LT Track System.

Fits: UR, RU, RS (except X rs Turbo 2016 & up models)
715001973
$144.99

8" (20 CM) ALPINE FLEX PLOW EXTENSIONS
(Not illustrated)
- These conveniently extend your Alpine Flex Plow.

Fits: Alpine Flex Plow
715001385
$134.99

ALPINE FLEX PLOW RUBBER FLAP
(Not illustrated)
- Keeps snow away from the driver.
- Minimizes snow flowing over plow.
- Increases snow rolling effect.

Fits: 72" (183 cm) Alpine Flex Plow
715002117
$84.99

ALPINE FLEX WEAR BLADE (PLASTIC)
(Not illustrated)
- Flexible UHMW plastic construction won't scratch your driveway.
- Replaces stock wear blade.

Fits: 72" (183 cm) Alpine Flex Plow
715002120
$164.99

ALPINE FLEX WEAR BLADE (STEEL)
(Not illustrated)
- Long-lasting wear blade that provides a sharper cut.
- Replaces stock wear blade.

Fits: 72" (183 cm) Alpine Flex Plow
715002121
$114.99

ALPINE FLEX DRIFT CUTTER
(Not illustrated)
- Keeps snow securely in the plow.
- Fits on either left or right side.
- Sold individually.
- Requires 8" (20 cm) Alpine Flex Plow Extensions (715001385).

Fits: Alpine Flex Plow
715001386
$94.99

ALPINE FLEX PLOW EDGE MARKERS
(Not illustrated)
- For a more accurate view of the width of your plow so you avoid damaging your curb, your car or your house.

Fits: Alpine Flex Plow
715001388
$39.99

DEFENDER COMMANDER

72" (183 CM) SUPER-DUTY PLOW KIT

- A comprehensive plow system with manual lift and angling.
- Ultra-durable 72" (183 cm) blade made of 12-gauge steel with integrated reinforcement and heavy-duty push tubes to tackle the most demanding jobs.
- Requires a winch for raising and lowering.
- Convenient disconnect system for quick and easy installation or removal.
- Front mount provides minimum 11" (28 cm) lift distance.

THIS KIT INCLUDES

72" (183 cm) Super-Duty Plow (715001292)
Super-Duty Plow Push Frame (715001293)
Super-Duty Plow Mounting Kit (715002731)

Fits: UR

715003416

$1,229.97

72" (183 cm) Super-Duty Plow (715001292)
Super-Duty Plow Push Frame (715001293)
Super-Duty Plow Mounting Kit (715001294)

Fits: RU

715001140

$1,229.97



SUPER-DUTY PLOW ACCESSORIES

SUPER-DUTY PLOW HYDRAULIC ANGLING KIT

- Allows you to have full up/down and left/right plow control at your fingertips.
- Pre-assembled, it comes with everything you need to turn your Commander and Commander MAX Super-Duty Plow into a quick, easy-to-control unit from the driver's seat.
- Using one hand to control all plow motions with the supplied joystick will allow you to easily concentrate and manage your plowing tasks.
- With this commercial grade kit, you will send snowexactly where you want reliably all winter long.
- Winch and plow sold separately.

Fits: UR, RU

715002840

$1,299.99



Dual cylinders hydraulic

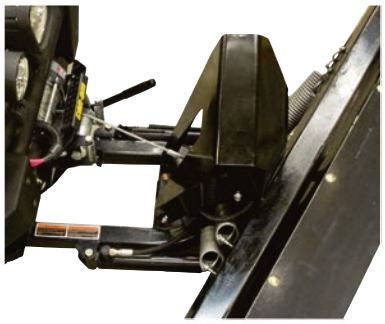

Electric hydraulic unit

PLOW BLADE EXTENSIONS

- Side extensions for widening your plow blade by 6" (15 cm) on each side.
- Include rubber flaps for extension parts.
- Sold in pairs.

Fits: Super-Duty Plow

715001217 • Black

$274.99



WARN† PLOW ROLLER FAIRLEAD

- Larger diameter lower roller reduces wear on wire rope for plow application.
- For use with Super-Duty Plow.

Fits: Super-Duty Plow

715001223

$69.99



SUPER-DUTY PLOW PUSH FRAME EXTENSION

(Not illustrated)

- Extension to use the Super Duty Plow with the Apache 360 LT Track System.
- Comes with Plow magnetic switch (715001995) and plow pulley (715002042).
- Requires Front Bumper or Front Accessory Bar for installation.

Fits: Super-Duty Plow

715001221 • Black

$289.99

PLOW EDGE MARKERS

(Not illustrated)

- For a more accurate view of the width of your plow.
- Allows you to work closely around objects.

Fits: Super-Duty Plow

715001216

$39.99

PLOW DRIFT CUTTER

(Not illustrated)

- Keeps snow securely in the plow.
- Allows you to cut a cleaner pass.
- Sold individually.

Fits: Super-Duty Plow

715001218 • Black

$94.99

PLOW RUBBER FLAP

(Not illustrated)

- Keeps snow away from the driver and helps snow to roll in front of the plow.

Fits: Super-Duty Plow

715001219

$94.99

PLOW PULLEY

(Not illustrated)

- For use with the Super-Duty Plow.
- Helps winching efficiency.
- Requires Front XT Bumper.

Fits: Super-Duty Plow

715002042

$49.99

PLOW MAGNETIC SWITCH

(Not illustrated)

- Magnetic switch that stops the winch to prevent cable, winch and frame damage.
- For use with Super-Duty Plow.

Fits: Super-Duty Plow

715001995

$104.99

COVERS & ADD-ONS

DEFENDER MAVERICK COMMANDER


715003393


715001369


715001025


715001368

TRAILERING COVERS

- Can-Am branded 300-denier solution-dyed, water-repellent polyester construction.
- Allow access to fuel, cargo box, and passenger compartment.
- Heavy-duty elastic strap around bottom for secure fit.
- Lined with soft fabric in the windshield area to prevent scratching.

- Fits with or without roof, light rack, front and rear bumpers, side mirrors and Baja-Style Spare Tire Holder.

Fits: RS (except MAX models)
715001655 • Black
$329.99

Fits: RS 2014 & up (MAX models only)
715002103
$359.99

- Fits with or without roof, light rack, front rack, light protector, front and rear bumpers, and side mirrors.

Fits: RU (except MAX models)
715001025
$289.99

Fits: RU 2014 & up (MAX models only)
715001963
$359.99

Fits: UR (except MAX models)
NEW 715001369 · Black
$249.99

Fits: UR (MAX models only)
NEW 715003393
$399.99

STORAGE COVERS

- Can-Am branded 100-denier solution-dyed, water-repellent polyester construction.
- Fit with or without most accessories.
- Heavy-duty elastic strap around bottom and polypropylene webbing across bottom for secure fit.

Fits: RU (except MAX models)
715001368 • Black
$229.99

ANTI-POOLING POLES

- 8 mm fiberglass poles to prevent snow or rain from accumulating on your trailer cover.
- Sold in pairs.
- Comes with nylon bag.
- Not for use while trailering.

Fits: RS, RU
715001374
$20.99





LICENSE PLATE HOLDER

- Supports your license plate.

Fits: RU
715001326
$29.99



LOCK FOR TAILGATE

- Device locks lower tailgate.
- Includes key.

Fits: RU
715001127
$29.99



WORK KEY

- Key limits vehicle speed to 25 mph (40 km/h) for use on construction sites.

Fits: RS, RU
715001201
$29.99



LOCKABLE GAS CAP

- Protects your fuel.
- Meets EPA requirements.

Fits: RS, RU
715001124
$44.99



12 V POWER OUTLET

- 12 V accessories outlet.
- Easy plug-in harness included.

Fits: RS
715001650
$39.99

Fits: RU, UR (on base & DPS models)
715001321
$39.99

ACCESSORY TIRES

ZILLA TIRE BY MAXXIS*



- Sold individually.

Front
27" x 10" x 14"
705401302
$179.99

Rear
27" x 12" x 14"
705501703
$194.99

NEW

ITP TERRACROSS TIRE

- This smooth-riding tire will command every bit of traction from the ground while still managing to float across loose snow, sand and mud.
- Features extreme-duty construction for improved puncture protection, extra-tough rubber compound for increased tread life, and the interlocking tread pattern and wide footprint make it one of the toughest and grippiest radials around.
- Not EC compliant.

Fits: G2 (DPS models except G2L), G2 (XT models except G2L, XT-P & Limited)

Front	Rear
26" x 8" x 14"	26" x 10" x 14"
705401906	705502421
$149.99	$189.99



OEM TIRES



GORILLA SILVERBACK TIRE

- AT30X9-14 Gorilla Silverback mud tire.
- Sold individually.
- Not EC compliant.

Fits: G2 (850 & 1000 models only)
30" x 9" x 14"
705400962
$229.99



MAXXIS MUDZILLA TIRE

- Not EC compliant.

Fits: G2 (X mr 570 & 650 models only)

Front	Rear
28" x 8" x 12"	28" x 10" x 12"
705401391	705501836
$199.99	$219.99



CARLISLE ACT TIRE

Fits: G2 (500-1000 XT models only)

Front	Rear
26" x 8" x 12"	26" x 10" x 12"
705401333	705501769
$129.99	$139.99
705401334 · CE	705501770 · CE

Fits: G2 (400 XT models only)

Front	Rear
25" x 8" x 12"	25" x 11" x 12"
705400606	705500933
$119.99	$144.99
705400326 · CE	705500908 · CE



CARLISLE BLACK ROCK TIRE

Fits: RU (Base models only)

Front	Rear
27" x 9" x 12"	27" x 11" x 12"
705400781	705501129
$114.99	$149.99



CARLISLE BADLANDS A/R TIRE

Fits: G2 (500-1000 Base models only)

Front	Rear
26" x 8" x 12"	26" x 10" x 12"
705401331	705501767
$109.99	$124.99
705401332 · CE	705501768 · CE



CARLISLE TRAIL WOLF TIRE

Fits: G2 (400 Base models only)

Front	Rear
25" x 8" x 12"	25" x 11" x 12"
705401625	705502164
$109.99	$129.99
705400607 · CE	705502165 · CE



ITP HOLESHOT ATR TIRE

Fits: G2S

Front 205/80R12	Rear 270/60R12
25" x 8" x 12"	25" x 10" x 12"
705400600	705500926
$129.99	$154.99
705400475 · CE	705500820 · CE

*Consult your operator's guide/owner's manual for proper tire type and rim sizing. Improper tire type and rim selection may affect vehicle handling. Check with your local authorities for proper regulation.

OEM TIRES

DURO THRASHER TIRE

Fits: DS 90/70

Front - 19" x 7" x 8"
V42711DGF000LL
$69.99
Rear - 18" x 9.5" x 8"
V42712DGF010LL
$69.99



KENDA KLAW MXR TIRE

Fits: DS 90 X

Front - 20" x 6" x 10"
V42711DGF01HLL
$99.99
Rear - 18" x 10.5" x 8"
V42712DGF01HLL
$109.99



ITP HOLESHOT SR TIRE

Fits: DS 450

Front - 21" x 7" x 10"
705400432
$89.99
Rear - 20" x 10" x 9"
705500787
$119.99



ITP QUADCROSS MX PRO TIRE

Fits: DS 450 X mx

Front - 20" x 6" x 10"
705400765
$109.99
Rear - 18" x 10" x 8"
705501106
$119.99



ITP HOLESHOT GNCC TIRE

Fits: DS 450 X xc

Front - 21" x 7" x 10"
705400650
$114.99
Rear - 20" x 10" x 9"
705500989
$149.99



KENDA KNARLY TIRE

Fits: DS 250

Front - 22" x 7" x 10"
S44710RCA000
$89.99
Rear - 20" x 11" x 9"
S42710RCA000
$99.99



REAR TIRE CHAINS

- Improve your traction in mud and snow.
- Sold in pairs.

26" x 10" x 12"
715500218
$79.99
25" x 10"x 12"
715000225
$79.99



NEW

MAXXIS M923J / M924J

Fits: UR (Base and DPS models only)

Front - 25 x 8 x 12
705401658
$114.99
Rear - 25 x 10 x 12
705502215
$149.99



OEM TIRES

MAXXIS BIGHORN 2.0 TIRE



Fits: RU (except XT-P & Base models), UR (XT, XT Cab)

Front	Rear
27" x 9" x 14"	27" x 11" x 14"
705401377	705502019
$209.99	$219.99
705400961 · CE	705501295 · CE

Fits: RS, RU (XT-P & Base models only)

Front	Rear
27" x 9" x 12"	27" x 11" x 12"
705401385	705501817
$174.99	$184.99
705401386 · CE	705501818 · CE

Fits: RU, RS, SSP 64" Standard

Front	Rear
28" x 9" x 14"	28" x 11" x 14"
705401592	705502144
$199.99	$229.99



NEW

X DS TIRE - MAXXIS BIGHORN

Fits: SSP

Front - 29" x 9" x 14"	Rear - 29" x 11" x 14"
705401674	705502225
$164.99	$199.99



NEW

X RS FRONT AND REAR TIRE - MAXXIS BIGHORN

Fits: SSP

Front & Rear - 30" x 10" x 14"

705401718

$209.99

OEM RIMS & BEADLOCK FOR SIDE-BY-SIDE VEHICLES

NEW

X MR AND DEFENDER RIM

- Cast aluminum rim with trend setting explosive styling so you can ride - and look - like a trailblazer.
- Front: 14" x 6.5" offset = 10 mm

Fits: UR (front wheels), ATV, SSV (X mr models front & rear wheels)

- 705401848 • Black and machined
- 705401849 • Black

$129.99



NEW

DEFENDER RIM

- Cast aluminum rims with trend setting explosive styling so you can ride - and look - like a trailblazer.
- Rear: 14" x 8.5" offset = 23 mm

Fits: UR (rear wheels)

- 705502397 • Black and machined
- 705502398 • Black

$129.99



NOTE: Matching Nuts - 250100100 Black, 250100082 Chrome / Matching Cap - 705401541

14" MAVERICK X DS RIM

- Black with clear coat aluminum rim.
- Choice of beadlock color (not included).
- Needs 16 bolts (250000435) for installing the beadlock.

Fits: RS, RU

Front - 14" x 6.5" offset = 41 mm	Rear- 14" x 8" offset = 51 mm
705401594	705502146
$229.99	$229.99



14" X DS BEADLOCK

- Cast aluminum beadlock.
- Must be installed on Front Rim (705401594) and Rear Rim (705502146).

Fits: RS, RU

- 705401586 • Manta Green
- 705401702 • Octane Blue
- 705401837 • Can-Am Red

$74.99

12" MAVERICK RIM

- Black with clear coat aluminum rim.
- Choice of beadlock color (not included).
- Needs 16 bolts (250000435) for installing the beadlock.

Fit: RS

Front - 12" x 6"	Rear - 12" x 7.5"
705401678 • Black	705502244 • Black
$194.99	$195.99



12" MAVERICK BEADLOCK

- Cast aluminum beadlock.
- Must be installed on Front Rim (705401678) and Rear Rim (705502244).

Fits: RS

- 705401445 • Can-Am Red
- 705401543 • Orange Crush
- 705401329 • Yellow
- 705401695 • Octane Blue

$69.99

NOTE: Matching Nuts - 250100100 / Matching Cap - 705400928

OEM RIMS & BEADLOCK FOR SIDE-BY-SIDE VEHICLES

LIMITED 14" RIM

- Premium cast aluminum rim.
- Black with machined face.
- Sold individually.
- Standard on Limited model.

Fits: RS, RU

Front - 14" x 7" offset = 41 mm
705501813 • Silver/Black
$129.99
Rear - 14" x 8.5" offset = 51 mm
705401380 • Silver/Black
$144.99



XT 14" RIM

- Premium cast aluminum rim.
- Sold individually.
- Standard on XT Camo models.

Fits: RS, RU

Front - 14" x 7" offset = 41 mm
705401379 • Black
$139.99
705400632 • Silver with clear coat
$129.99
Rear - 14" x 8.5" offset = 51 mm
705501814 • Black
$144.99
705501812 • Silver with clear coat
$159.99



NOTE: Matching Nuts - 250100100 Black & 250100082 Chrome / Matching Cap - 705400680 Black

OEM RIMS FOR ATV

ATV: G2 DPS, G2 XT, G2 MAX 650, G2 MAX XT, G2 MAX Limited

NEW

14" RIM

- Prenium cast aluminum black painted with machining and clear coat rim.
- Center hole: 72 mm
- Bolt circle pattern: 4/136 mm

Front - 14" x 6.5" offset = 40 mm
705401853 • Black and machined
$119.99
Rear - 14" x 8.5" offset = 50 mm
705502402 • Black and machined
$129.99



NEW

14" RIM

- Prenium cast aluminum rim.
- Center hole: 72 mm
- Bolt circle pattern: 4/136 mm

Front - 14" x 6.5" offset = 40 mm
705401852 • Black with clear coat
705401851 • Silver with clear coat
$109.99
Rear - 14" x 8.5" offset = 50 mm
705502401 • Black with clear coat
705502400 • Silver with clear coat
$119.99



NOTE: Matching Nuts - 250100100 Black, 250100082 Chrome / Matching Cap - 705400928

COLORED FINS FOR RIMS

- Plastic fins that enhance the appearance of your vehicle.

Fits on following rims: XT, XT-P and Limited 2016 (705500986, 705501015, 705501019, 705400687, 705400648, 705400683)

705400681 • Yellow
705400950 • Steel Grey
$1.99



XTR CUSTOM RIM KIT

- Custom Can-Am XTR branded 12" painted aluminum rims.
- Includes matching chrome nuts and center covers.
- Set of 4.

Fits: G2, G2S 2012 & prior (with 650 or 800R engine)

Front - 12" x 6"
Rear - 12" x 8"
715000611 • Black
$519.99



OEM RIMS & BEADLOCK FOR ATV

RENEGADE X XC & OUTLANDER XTP RIM



- Black with clear coat aluminum rim.
- Needs 16 bolts (250000435) for installing the Beadlock.
- Choice of beadlock color (not included).

Fits: G2, G2L, G2S

Front - 12" x 6"	Rear - 12" x 7.5"
705401678 • Black	705502244 • Black
$194.99	$195.99

BEADLOCK

- Cast aluminum beadlock.
- Must be installed on Front Rim (705401678) and Rear Rim (705502244).

Fits: G2, G2L, G2S

705401156 • Yellow
705401533 • Orange Crush
705401812 • Manta Green

$69.99

OUTLANDER RIM (CAMO MODEL)



- Black with clear coat aluminum rim.

Fits: G2, G2L, G2S

Front - 12" x 6"
705401127 • Black with clear coat
$144.99
Rear - 12" x 7.5"
705501493 • Black with clear coat
$154.99

NOTE: Matching Nuts - 250100100 / Matching Cap 705400928



ACCESSORY RIMS FOR ATV & SIDE-BY-SIDE VEHICLES



RED LABEL BLACK RIM BY DWT*

- Sold individually.

Front - 12" x 8"	Rear - 12" x 10"
Bolt circle pattern: 4/136 mm	Bolt circle pattern: 4/136 mm
Wheel offset: 4 + 4	Wheel offset: 5 + 5
705401261	705501717
$129.99	$129.99



LOCKOUT 393 14" RIM BY VISION*

- Sold individually.
- Matching Cap (705401362), Matching Nuts (250100100).

Front - 14" x 7"	Rear - 14" x 8"
Bolt circle pattern: 4/136 mm	Bolt circle pattern: 4/136 mm
Wheel offset: 4 + 3	Wheel offset: 4 + 4
705401363	705501787
$99.99	$99.99



OUTLANDER X MR RIM - ITP-SS212*

- Black with machining and clear coat rim.
- Matching Cap (705400963), Matching Nuts (250100100).
- Sold individually.

Fits: G2 (X mr models only)

Front & Rear - 14" x 6"
705400877 • Black and machined
$129.99

*Consult your operator's guide/owner's manual for proper tire type and rim sizing. Improper tire type and rim selection may affect vehicle handling. Check with your local authorities for proper regulation.

SPORTSWEAR & RIDING GEAR



NEW Kappa

KAPPA GEAR

**KAPPA is for people on the move.
It's fashion at the crossroads of performance; aggressively stylish, adrenaline driven, and designed to make a lasting impression.**

177 Go Fas Racing Team Gear
179 Kappa-Kombat Technical Gear
182 Can-Am Gear by Kappa
184 Kappa Casual Wear



SPORTSWEAR

Wear your heart on your sleeve, or at the very least your love of everything Can-Am. Our sportswear is where you'll find the perfect blend of technical excellence, versatility, comfort and great looks.

186 Men's
190 Ladies'
191 Teen & Kidswear



HELMETS & GOGGLES

Comfort and security. That's what it's all about. There's a lot to choose from, so it won't be hard to find a helmet that suits your needs and the right goggles that'll see you through every exciting Can-Am day.

192 Cyclops Gear Cameras
193 Cross Helmets
198 Which Cross Helmet is for you?
200 Open Face / Full Face Helmets
201 Bluetooth Communication Systems
202 Goggles



RIDING GEAR

Rugged, reliable and ready for just about anything you can throw at them. That's what we've engineered into all our riding gear. It's guts and glory, pride and that powerful can do Can-Am attitude that'll get you there, and get things done.

204 Gloves
205 Jerseys
206 Jackets & Pants
211 Boots
213 Technology Guide
214 Technical Wear
216 Bags
217 Sizing Chart

NEW

Kappa

GO FAS RACING TEAM GEAR
KAPPA-KOMBAT TECHNICAL GEAR
CAN-AM GEAR BY KAPPA
KAPPA CASUAL WEAR



NEW GO FAS RACING TEAM GEAR

Fashion for the fearless, created with performance in mind, it includes a great big shout out to the exceptional Go Fas racing team. Kappa, Can-Am and Go Fas: be sure to look good during your victory lap.

CATCH THE VIDEO AT STORE.CAN-AM.BRP.COM

GO FAS RACING TEAM POLO

- Short sleeve polo.
- Embroidered sponsor patches.
- Red numbering on back.
- Can-Am logos on front and back.
- Red numbering on left sleeve.

100% Polyester

MEN'S

286634
S, M, L, XL, 2XL, 3XL
White (01), Yellow (10), Black (90)
$34.99



LADIES'

- Feminine cut.

286635
XS, S, M, L, XL, 2XL
White (01)
$34.99



GO FAS RACING TEAM HOODIE

- Full-zip hooded fleece with long sleeves.
- Embroidered sponsor patches.
- Can-Am logos on front and back.
- Red numbering on left sleeve.

60% Cotton, 40% Polyester

MEN'S

286638
S, M, L, XL, 2XL, 3XL
Black (90)
$64.99



LADIES'

286639
XS, S, M, L, XL, 2XL
White (01)
$64.99





GO FAS RACING TEAM CAP

- Can-Am logo on front.
- Embroidered sponsor patches.
- Kappa logo on side.
- Red numbering on peak.

100% Polyester

286641 • One size • Yellow (10), Black (90)
$19.99

GO FAS RACING TEAM TECHNICIAN SHIRT

- Short sleeve shirt.
- Embroidered sponsor patches.
- Can-Am logos on front and back.
- Red numbering on left sleeve.
- Chest pocket.

58% Cotton, 38% Polyester, 4% Elastane

286636
S, M, L, XL, 2XL, 3XL
Yellow (10), Black (90)
$49.99



GO FAS RACING TEAM JACKET

- Mix of embroidered and printed sponsor patches.
- Can-Am logos on front and back.
- Red numbering on left sleeve.

58% Cotton, 38% Polyester, 4% Elastane

286640
S, M, L, XL, 2XL, 3XL
Black (90)
$79.99





GO FAS RACING TEAM JERSEY

- Long sleeve jersey with mesh inserts.
- Embroidered sponsor patches.
- Can-Am logo on front.
- Kappa logo on sleeves.

100% Polyester

286637
S, M, L, XL, 2XL, 3XL
Yellow (10), Green (70), Blue (80)
$49.99



GO FAS RACING TEAM T-SHIRT

- Short sleeve t-shirt.
- Embroidered sponsor patches.
- Can-Am logos on front and back.
- Red numbering on left sleeve and back.

100% Cotton

286632
S, M, L, XL, 2XL, 3XL
Yellow (10), Black (90)
$25.99



LADIES' GO FAS RACING TEAM T-SHIRT

- Short sleeve t-shirt.
- Feminine cut.
- Can-Am logo on front.
- Red numbering on sleeve and front.

100% Cotton

286633
XS, S, M, L, XL, 2XL
Yellow (10), Black (90)
$25.99



NEW KAPPA-KOMBAT TECHNICAL GEAR

Squeeze every last bit of adventure out of every moment on the trail or on the job by wearing only the very best. Kappa-Kombat Technical Gear raises the bar for excellence without compromising on style.



KAPPA-KOMBAT TECHNICAL JERSEYS

- Printed graphics and mesh inserts.
- Kappa logo on front.

100% Polyester

LONG SLEEVE
286666
S, M, L, XL, 2XL, 3XL
Blue (80)
$49.99



SHORT SLEEVE
286667
S, M, L, XL, 2XL, 3XL
Blue (80)
$44.99



SLEEVELESS
286668
S, M, L, XL, 2XL, 3XL
Blue (80)
$39.99



LADIES' KAPPA-KOMBAT TECHNICAL JERSEYS

- Printed graphics and mesh inserts.
- Feminine cut.
- Kappa logo on front.

100% Polyester

LONG SLEEVE
286655
XS, S, M, L, XL, 2XL
White (01)
$49.99



SHORT SLEEVE
286669
XS, S, M, L, XL, 2XL, 3XL
White (01)
$44.99



SLEEVELESS
286670
XS, S, M, L, XL, 2XL, 3XL
Black (90)
$39.99





KAPPA-KOMBAT ACTIVE LONG SLEEVE JERSEY

- Printed graphics and mesh inserts.
- Kappa logo on front and on sleeves.
- Kombat logo on back.

100% Polyester

454046 • S, M, L, XL, 2XL, 3XL • Red (30)

$49.99



KAPPA-KOMBAT STEALTH LONG SLEEVE JERSEY

- Printed graphics and mesh inserts.
- Kappa logo on front and on sleeves.
- Kombat logo on back.

100% Polyester

454048 • S, M, L, XL, 2XL, 3XL • Black (90)

$49.99



KAPPA-KOMBAT DUAL LONG SLEEVE JERSEY

- Printed graphics and mesh inserts.
- Kappa logo on front and on sleeves.
- Kombat logo on back.

100% Polyester

454049
S, M, L, XL, 2XL, 3XL • Blue (80)
$49.99

CAN-AM LONG SLEEVE JERSEY

- Printed graphics and mesh inserts.
- Can-Am logo on front and on sleeves.

100% Polyester



MEN'S

454050
S, M, L, XL, 2XL, 3XL • White (01)
$49.99



LADIES'

454051
XS, S, M, L, XL, 2XL • Pink (36)
$49.99

KAPPA-KOMBAT TECHNICAL JERSEYS

- Printed graphics and mesh inserts.
- Kappa logo on front.

100% Polyester



LONG SLEEVE
286652
S, M, L, XL, 2XL, 3XL
Yellow (10), Green (70)
$49.99



SHORT SLEEVE
286653
S, M, L, XL, 2XL, 3XL
Yellow (10), Green (70)
$44.99



SLEEVELESS
286654
S, M, L, XL, 2XL, 3XL
Yellow (10), Green (70)
$39.99





CAN-AM TRIPLE BLACK LONG SLEEVE JERSEY

- Printed graphics and mesh inserts.
- Can-Am logo on front and on sleeves.

100% Polyester

454052 • S, M, L, XL, 2XL • Black (90)

$49.99

KAPPA-KOMBAT TECHNICAL COMPRESSION SHIRT

- Compression shirt with mesh inserts.
- Kappa and Kombat logos.

95% Polyester 5% Spandex



LONG SLEEVE

286643
S, M, L, XL, 2XL, 3XL • Black (90)

$49.99



SHORT SLEEVE

286644
S, M, L, XL, 2XL, 3XL • Black (90)

$39.99

KAPPA-KOMBAT TECHNICAL WATERPROOF JACKET

- Waterproof jacket.
- Kappa logo on right shoulder and right sleeve.
- Kombat logo on left side.



MEN'S

96% Polyester, 4% Spandex

286656 • S, M, L, XL, 2XL, 3XL • Black (90)

$79.99



LADIES'

· Feminine cut.

100% Polyester

286657 • XS, S, M, L, XL, 2XL • Black (90)

$79.99

KAPPA-KOMBAT TECHNICAL JACKET

- Water-resistant jacket with mesh inserts.
- Kappa logo on right shoulder and on both sleeves.
- Kombat logo on left side.

100% Polyester

MEN'S

286658
S, M, L, XL, 2XL, 3XL
Black (90)

$69.99



LADIES'

- Feminine cut.

286659
XS, S, M, L, XL, 2XL
Grey (09), Pink (36)

$69.99



NEW CAN-AM GEAR BY KAPPA

Übercool never wears out its welcome, which explains why countless thousands swear by Kappa Gear's exciting sense of active urban chic. Attitude + action are the patterns behind this Can-Am style collection, and they'll make you a believer.



CATCH THE VIDEO AT STORE.CAN-AM.BRP.COM



LONG SLEEVE TEE

- Long sleeve t-shirt.
- Can-Am logo.
- Kappa logo on the back of the neckline and on left sleeve.

100% Cotton

286661 • S, M, L, XL, 2XL, 3XL • White (01), Yellow (10), Red (30), Black (90)

$34.99



LADIES' LONG SLEEVE TEE

- Long sleeve t-shirt.
- Feminine cut.
- Can-Am logo on front at neckline.
- Kappa logo on upper back.

100% Cotton

286662 • XS, S, M, L, XL, 2XL • White (01), Grey (09)

$34.99

POLO

- Short sleeve polo.
- Can-Am logo on left chest.
- Kappa logo on right shoulder.

100% Cotton

286663
S, M, L, XL, 2XL, 3XL
Red (30), Blue (80), Black (90)

$34.99



HOODIE

- Full-zip hoodie fleece.
- Printed graphics.
- Kappa logo on shoulder.

60% Cotton,
40% Polyester



MEN'S

- Can-Am logo on front.

286664 • S, M, L, XL, 2XL, 3XL • Grey (09), Blue (80)

$64.99



LADIES'

- Feminine cut.
- Can-Am logo on right sleeve.

286665 • XS, S, M, L, XL, 2XL • Grey (09), Purple (40)

$64.99

NEW KAPPA CASUAL WEAR

Kappa Gear. There's nothing quite like it, advanced and avant-garde – a cutting-edge European original is about to take North America by storm and Can-Am is proud to be leading the charge. Wear or be square.



POLO

- Short sleeve polo.
- Kappa logo on right shoulder.

100% Cotton



MEN'S

286645
S, M, L, XL, 2XL, 3XL
Grey (09), Blue (80), Black (90)
$34.99



LADIES'

286646
XS, S, M, L, XL, 2XL
White (01), Red (30)
$34.99

HOODIE

- Full-zip hoodie.
- Kappa logo on left chest and on right sleeve.

60% Cotton,
40% Polyester





MEN'S

286647 • S, M, L, XL, 2XL, 3XL • Yellow (10), Green (70)

$64.99





LADIES'

- Feminine cut.

286648 • XS, S, M, L, XL, 2XL • White (01), Black (90)

$64.99



SPORT SHOES

- Laced training shoes.
- Soft and ultralight removable PU foam insock.
- Phylon outsole with non-slip rubber inserts.
- Kappa logo.

286660 • 8, 9, 10, 10.5, 11
Black (90)

$99.99

LADIES' SPORT ZIP-UP TOP

- Full-zip top with mesh inserts.
- Kappa logo on left side of chest.

60% Cotton,
40% Polyester

286642
XS, S, M, L, XL, 2XL
Black (90)

$44.99



LADIES' SPORT PANTS

- Sport pants with mesh inserts.
- Kappa logo on right thigh.

60% Cotton,
40% Polyester

286671
XS, S, M, L, XL, 2XL
Black (90)

$34.99



FLEECE

- Full-zip fleece.
- Wicking fabric.
- Zipped pocket on left chest.
- Can-Am logo on chest.
- Kappa logo on left shoulder.

60% Cotton,
40% Polyester

MEN'S

286649
S, M, L, XL, 2XL, 3XL
Black (90)

$59.99



LADIES'

- Feminine cut.

286650
XS, S, M, L, XL, 2XL
White (01)

$59.99





SHORT

- Shorts with Kappa logo on left thigh and on right upper back.
- Two back pockets.

97% Cotton, 3% Elastane

286651 • S, M, L, XL, 2XL, 3XL
Black (90)

$49.99



NEW

ZIPPED HOODIE

- Full-zip hooded sweatshirt.
- 2 chest pockets.
- Ribbed waistband and cuffs.
- Can-Am print on hood with contrasting hood cords.
- Checkered print on sleeves (black model only).

60% Cotton, 40% Polyester

286620
S, M, L, XL, 2XL, 3XL
Khaki (05), Black (90)
$74.99



MOSSY OAK CAMO FLEECE

- Full-zip fleece with hand warmer pockets.
- Mossy Oak Break-Up Country Camo fabric matches ATV/Side-by-side pattern.

100% Polyester

286589
M, L, XL, 2XL, 3XL
Mossy Oak Break-Up Country Camo (37)
$79.99



WILD X-TEAM HOODIE

- Full-zip hooded sweatshirt.
- Ribbed waistband and cuffs.
- Non-fading sublimated graphics.
- 2 hand pockets.

100% Polyester

286576
S, M, L, XL, 2XL, 3XL
Blue (80), Black (90)
$79.99



X-TEAM FLEECE

- High-filament polyester with slight brushed finish for added softness and warmth.
- Spandex content enhances mobility.
- Ideal as a warm, dry first layer.
- Full-zip.
- Welded chest pocket.

95% Polyester, 5% Spandex

286568
S, M, L, XL, 2XL, 3XL
Charcoal Grey (07)
$74.99





IMPULSE HOODIE

- Ribbed waistband and cuffs.
- Contrasting inner hood.
- Kangaroo front pocket.

60% Cotton,
40% Polyester Fleece

286575
S, M, L, XL, 2XL, 3XL
Beige (02),
Heather Grey (27)

$74.99



OVERSHIRT

- Plaid flannel overshirt.
- Slightly insulated.
- Front opening with press buttons.
- 2 chest pockets.

100% Cotton

286587
S, M, L, XL, 2XL, 3XL
Black (90)

$74.99

MUST HAVE



TECHNICAL FLEECE

- Waterproof, windproof and breathable full-zip soft shell.
- Fleece interior for ultimate comfort.
- Pre-shaped sleeves.
- 2 zippered pockets.
- 3M® reflective print and piping.

100% Polyester

286330
S, M, L, XL, 2XL, 3XL
Black (90)

$109.99



LONG SLEEVE FLANNEL SHIRT

- Plaid flannel shirt.
- Chest pockets.

100% Cotton

286584
S, M, L, XL, 2XL, 3XL
Grey (09)

$59.99





NEW

X-TEAM TEE

- Print at sleeve and front.

100% Cotton

286618
S, M, L, XL, 2XL, 3XL
White (01), Black (90)
$29.99



TECHNICIAN SHIRT

- Large X-Team embroidery at upper back.
- Pleat at back center for ease of movement.
- Chest pocket.

65% Polyester, 35% Cotton

286566
S, M, L, XL, 2XL, 3XL
Charcoal Grey (07), Black (90)
$64.99



SIGNATURE TEE

100% Cotton

286320
S, M, L, XL, 2XL, 3XL
White (01), Khaki (05), Black (90)
$21.99



TRACK TEE

100% Cotton

286574
S, M, L, XL, 2XL, 3XL
Red (30), Blue (80), Black (90)
$25.99



ORIGINAL TEE

100% Cotton

286402
S, M, L, XL, 2XL, 3XL
Heather Grey (27), Ice (38), Black (90)
$24.99



LONG SLEEVE ORIGINAL TEE

100% Cotton

286415
S, M, L, XL, 2XL, 3XL
Heather Grey (27), Ice (38), Black (90)
$34.99







NEW

X-RACE CAP
- Adjustable plastic back strap.
- Flat peak.
- Can-Am embroidery and X-Team print on peak.

100% Cotton

286613 • One size • Charcoal Grey (07), Blue (80)

$24.99



MOSSY OAK CAMO CAP
- Matches ATV/Side-by-side Mossy Oak Break-Up Country Camo pattern.
- Front Can-Am embroidery.
- Metal adjuster with BRP logo.

100% Polyester

286548 • One size • Mossy Oak Break-Up Country Camo (37)

$19.99



CLASSIC CAP
- Ultra comfortable, stretch, lightweight fabric.
- Metal adjuster with BRP logo.

72% Polyester, 23% Rayon, 5% Spandex

286210 • One size • Black (90)

$19.99

TRACK CAP
- Fitted stretch twill cap.
- Flat peak.

97% Cotton, 3% Spandex

286573
S/M, L/XL
Red (30), Blue (80), Black (90)

$21.99



ORIGINAL CAP
- Metal adjuster with BRP logo.

100% Cotton

286401
One size
Beige (02), Orange (12), Black (90)

$21.99



RANCH CAP
- Metal adjuster with BRP logo.
- Water-resistant waxed cotton.

100% Cotton

286564
One size
Beige (02), Brown (04)

$19.99



SUMMER BEANIE
- Lightweight, plaid texturized knitted beanie.

95% Cotton, 5% Spandex

286323
One size
Charcoal Grey (07), Black (90)

$15.99



BANDANA
- Light and comfortable.
- Multiple wear options.

80% Polyester, 20% Cotton

286347
One size
Mixed Color (18), Black with graphics (94)

$9.99






LADIES' X-TEAM TEE

• V-neck.

95% Cotton, 5% Spandex

286567 • XS, S, M, L, XL, 2XL • White (01), Black (90)

$29.99



LADIES' IMPULSE TANK TOP

• Contrasting binding at collar and armholes.

• Can-Am print at back.

95% Cotton, 5% Spandex

286482 • XS, S, M, L, XL, 2XL • Camo (37), Black (90)

$24.99



LADIES' ZIPPED MICRO-POLYESTER

• Feminine cut.

• 2 zippered pockets.

95% Polyester, 5% Spandex

286565 • XS, S, M, L, XL, 2XL • Charcoal Grey (07)

$64.99

KIDS' BLOCK TEE



- Can-Am print on back shoulder.

100% Cotton

286472
2, 3-4, 5-6
Blue (80)

$24.99

BOY CHASE TEE



- Can-Am print at back.

100% Cotton

286489
7-8, 10-12, 14-16
Red (30), Black (90)

$21.99

GIRL CAN-AM HOODIE



- Can-Am print at back.

72% Cotton, 23% Polyester, 5% Spandex

286486
7-8, 10-12, 14-16
Purple (40)

$49.99

CAN-AM JUNIOR TRAIL GOGGLES BY SCOTT



- Integrated custom painted frame and strap graphics.
- No Fog† anti-fog lens treatment.
- 100% Plastic UV protected clear Lexan† lens.
- Multi-layer face foam.
- Durable anti-slip strap.

447898 • One size • Black with graphics (94)

$49.99

TEEN RACE JERSEY



- Quick-dry, antibacterial and moisture-wicking fabric.
- Extended back for riding position.
- Unisexe non-fading sublimated print.

100% Polyester

286464
7-8, 10-12, 14-16
Red (30)

$39.99

TEEN RACE PANTS



- Lightweight and extremely breathable pants.
- Overall water-repelling Teflon† treatment.
- Debossed fullgrain leather inner knees for heat and abrasion resistance.
- Non-fading sublimated graphics.
- Stretch panel at crotch, knees, side waist, upper back and lower back leg for ease of movement.
- Rubberized elastic waist to hold jersey in place.
- Ratchet style waist closure for better adjustment.
- Straight hem at leg opening for more comfort inside boots.
- 3/4 length mesh lining.

94% Polyester, 6% Leather

286493
7-8, 10-12, 14-16
Red (30)

$119.99

TEEN TEAM RIDING GLOVES



- Spandex construction for great flexibility.
- Direct-injection patches on back hand.
- Chamude† palm.
- Pre-curved design.
- Hook-and-loop wrist closure system.

Spandex, Chamude, Nylon, Polyester

286465
6-8, 10-12, 14-16
Red (30)

$24.99

JUNIOR HELMETS*

- High-tech, lightweight and tough.
- Fully-adjustable aero-tuned peak.
- Moisture-wicking and breathable chin strap, liner and cheek pads.
- Ventilation system.
- Easily removable and washable liner and cheek pads.
- Provide maximum visibility.
- Fit all goggles.
- Strap grip to hold goggles strap in place.
- D.O.T. certified.
- Breath deflector mask included.
- Available with clear-coated bold waterslide graphics.

Shell: ABS

JUNIOR CROSS X-1 GRAFFITI HELMET



447989
S, M, L
Black with graphics (94)

$99.99

DOT

JUNIOR X-1 BLAZE HELMET



447673
S, M, L
Orange (12)

$109.99

DOT

*Some models and accessories shown may not be available or homologated in your country. Contact your BRP dealer or local authorities for information.

A BRAND NEW VIDEO EXPERIENCE!
THE NEW CG360 CAMERA BY CYCLOPS GEAR.

You control what you see and can capture everything around you!



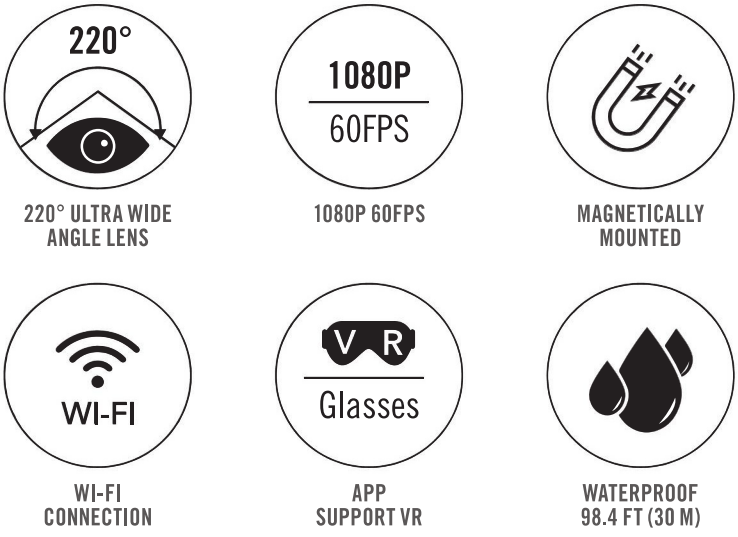

NEW

CYCLOPS 360 PANORAMIC CAMERA

- 220° ultra-wide angle lens.
- 4K HD and 1080p at 60FPS.
- 12MP photo resolution.
- Compact design facilitates carriage, handling and storage.
- Standard accessories include 32GB Micro SD Card Class 10 and Waterproof Case.
- Free wifi and VR support app for your IOS and Android smartphone or tablet.

9700020090

$349.99





CGX2 CAMERA

- 4K HD and 1080p at 60fps.
- 2" LCD display screen.
- Waterproof housing up to 165 ft (50 m) underwater and 2.4gh waterproof remote.
- Comes with 32GB Micro SD Card Class 10 and 9 mounts.
- WIFI available to control your camera from your smartphone or tablet with the free iCyclops App for IOS and Android.

2866860090

$299.99

NEW

CGX2 CHARGER KIT PACK

(Not illustrated)

469296 • One size

$59.99

NEW

USB AC CHARGER

(Not illustrated)

970001 • One size

$17.99

NEW

CGX2 EXTRA BATTERY

(Not illustrated)

469297 • One size

$34.99

NEW

32GBSD CARD

(Not illustrated)

469295 • One size

$44.99

CROSS HELMETS*

For warmer riding conditions and more active riding, you might want to opt for a cross helmet with goggles. In highly active riding where you will be sweating and breathing hard, goggles are the best solution for clear vision, and the extra open area will keep you from overheating.

XP-R2 | ULTRA LIGHTWEIGHT AND STRONG MULTI-DIRECTIONAL CARBON FIBER CONSTRUCTION WITH PREMIUM STYLE AND DETAILS.



XP-R2 CARBON LIGHT ORIGINAL HELMET

Shell: Carbon Fiber Composite

447830
XS, S, M, L, XL, 2XL, 3XL
White (01)

$424.99

DOT ECE22.05



XP-R2 CARBON LIGHT HELMET

Shell: Carbon Fiber Composite

447656
XS, S, M, L, XL, 2XL, 3XL
Black (90)

$399.99

DOT ECE22.05



XP-R2 CARBON LIGHT BLAZE HELMET

Shell: Carbon Fiber Composite

447657
XS, S, M, L, XL, 2XL, 3XL
Orange (12)

$424.99

DOT ECE22.05



XP-R2 MORPHO KIT

- For a perfect custom fit.
- Left and right pads included.

447754
XS, S, M, L, XL, 2XL, 3XL • Clear (00)

$14.99



*Some models and accessories shown may not be available or homologated in your country. Contact your BRP dealer or local authorities for information.

WHICH CROSS HELMET IS FOR YOU? SEE COMPLETE DETAILS ON P.198-199



XP-3

SUPERLIGHT CROSS-STYLE HELMET: FEATURE-PACKED FOR EXCEPTIONAL PERFORMANCE, PROTECTION AND COMFORT.

NEW

XP-3 X-RACE HELMET

• Durable multi-colored clear-coated graphics.
Shell: Fiberglass
448395 • XS, S, M, L, XL, 2XL • Orange (12), Blue (80)
$239.99

DOT Snell ECE22.05





XP-3 HELMET

Shell: Fiberglass
448253
XS, S, M, L, XL, 2XL
Matte Black (93)
$229.99

DOT Snell



WHICH CROSS HELMET IS FOR YOU? SEE COMPLETE DETAILS ON P.198-199



XC-4

PREMIUM LOOK & STYLE.

XC-4 MODERN HERITAGE HELMET

Shell: Polycarbonate Composite

448251 • XS, S, M, L, XL, 2XL • White (01), Grey (09)

$149.99

DOT Snell

ECE VERSION (Not available in NA)

448340 • XS, S, M, L, XL, 2XL • White (01)

ECE22.05





NEW

LADIES' XC-4 HELMET

Shell: Polycarbonate Composite

448397 • XS, S, M, L, XL, 2XL
Pink (36)

$159.99

DOT ECE22.05



XC-4 HELMET

Shell: Polycarbonate Composite

448255
XS, S, M, L, XL, 2XL
Black (90)

$139.99

DOT Snell



WHICH CROSS HELMET IS FOR YOU? SEE COMPLETE DETAILS ON P.198-199



X-1

PACKED WITH FEATURES AT AN UNBEATABLE PRICE.

NEW

X-1 ZONE HELMET

• Fully-adjustable aero-tuned peak.

Shell: ABS

448387 • XS, S, M, L, XL, 2XL • Blue (80), Black (90)

$109.99

DOT





X-1 HELMET

Shell: ABS

447942
XS, S, M, L, XL, 2XL
Matte Black (93)

$99.99

DOT



WHICH CROSS HELMET IS FOR YOU? SEE COMPLETE DETAILS ON P.198-199



ENDURO

THE NAME SAYS IT ALL. DESIGNED FOR LONG RIDES AND HIGH ADVENTURE.

ENDURO CAMO HELMET

Shell: Polycarbonate Composite

448282
S, M, L, XL, 2XL, 3XL
Camo (37)

$159.99

DOT ECE22.05



ENDURO HELMET

Shell: Polycarbonate Composite

448259
S, M, L, XL, 2XL, 3XL
Matte Black (93)

$149.99

DOT ECE22.05



DUST MASKS

- Easily replaceable filters remove 99.9% of airborne dust, particles, pollen and odors.
- Made from soft yet durable neoprene material that fits snugly under helmets and goggles.
- XS/S fits most kids 12 and under, M/L fits most riders and XL/2XL fits larger frames (235+ lbs).
- Includes 2 replacement filters and a small storing pouch.

CAN-AM X-RACE DUST MASK

448247
XS/S, M/L, XL/2XL
Yellow (10)

$29.99



CAN-AM ORIGIN DUST MASK

447833
XS/S, M/L, XL/2XL
Black (90)

$29.99



CAN-AM VENTED DUST MASK

448246
XS/S, M/L, XL/2XL
Grey (09)

$32.99



WHICH CROSS HELMET IS FOR YOU? SEE COMPLETE DETAILS ON P.198-199

WHICH CROSS HELMET IS FOR YOU?

Compare. Learn. Find.

			SHELL	WEIGHT	SIZES
XP-R2	 XP-R2 Carbon Light Original  XP-R2 Carbon Light  XP-R2 Carbon Light Blaze	p.193	Carbon Fiber Composite	Light Very Light Ultra Light	XS, S, M, L, XL, 2XL, 3XL
XP-3	 NEW XP-3 X-Race  XP-3	p.194	Fiberglass	Light Very Light Ultra Light	XS, S, M, L, XL, 2XL
XC-4	 XC-4 Modern Heritage  XC-4 Helmet  NEW Ladies' XC-4 Helmet	p.195	Polycarbonate Composite	Light Very Light Ultra Light	XS, S, M, L, XL, 2XL
X-1	 NEW X-1 Zone  X-1	p.196	ABS	Light Very Light Ultra Light	XS, S, M, L, XL, 2XL
ENDURO	 Enduro Camo  Enduro	p.197	Polycarbonate Composite	Light Very Light Ultra Light	S, M, L, XL, 2XL, 3XL

FEATURES	BENEFITS	PRICE
• Weighs only +/- 1200 g in Large size.	▶ Less stress on neck and shoulder muscles.	**XP-R2 Carbon Light Original** **447830 • D.O.T. & ECE** **$424.99** **XP-R2 Carbon Light** **447656 • D.O.T. & ECE** **$399.99** **XP-R2 Carbon Light Blaze** **447657 • D.O.T. & ECE** **$424.99**
• Tool-less multi-adjustable front peak with anti-reflecting underside.	▶ Allows quick visor adjustment and reduces glare.	
• Flexible face trim design with a large nose protector area.	▶ Protects from wind and snow.	
• F.A.S. (Full Air System) with 10 ventilation points and double rear extractor.	▶ Allows you to control airflow for cooling.	
• Integrated rear fin.	▶ Added stability and aerodynamic performance.	
• Integrated goggle anti-slip design.		
• Multi-density EPS foam inner shell.		
• Removable and washable inner liner and cheek pads.	▶ Keeps your helmet fresh.	
• Liner features sanitized treatment.	▶ Promotes wicking of moisture.	
• Front top pocket for sweat absorbing pads.		
• Morpho System Plus - Ergonomic 3D cheek pads.	▶ Allows for a better fit.	
• Double-D racing buckle.	▶ Most secure fastening method.	
• Aluminum screws, protective coated parts.	▶ Assures lasting appearance.	
• Helmet bag.		
• Meets or exceeds D.O.T. and ECE certifications.		
• Weighs only +/- 1470 g in Large size.	▶ Less stress on neck and shoulder muscles.	**XP-3 X-Race** **448395 • D.O.T., Snell & ECE** **$239.99** **XP-3** **448253 • D.O.T. & Snell** **$229.99**
• EPS inner shell.	▶ Impact absorbing protection.	
• Front and rear vent system to keep you cool.	▶ Allows you to control airflow for cooling.	
• Custom stainless steel front vent design.		
• Aero-tuned and fully adjustable visor system.	▶ Added stability and aerodynamic performance.	
• Removable, washable and replaceable CoolMax moisture-wicking liner and cheek pads.	▶ Keeps your helmet fresh.	
• Lightweight double-D chin strap.	▶ Most secure fastening method.	
• Meets or exceeds SNELL M2015, D.O.T. and ECE certifications.		
• Weighs only +/- 1470 g in Large size.	▶ Less stress on neck and shoulder muscles.	**XC-4 Modern Heritage** **448251 • D.O.T. & Snell** **$149.99** **448340 • ECE** **XC-4** **448255 • D.O.T.& Snell** **$139.99** **Ladies' XC-4** **448397 • D.O.T. & ECE** **$159.99**
• EPS inner shell.	▶ Impact absorbing protection.	
• Front and rear vent system to keep you cool.	▶ Allows you to control airflow for cooling.	
• Custom stainless steel front vent design.		
• Fully-adjustable visor system.	▶ Added stability and aerodynamic performance.	
• Removable, washable and replaceable moisture-wicking liner.	▶ Keeps your helmet fresh.	
• Goggle strap grip.		
• Lightweight double-D chin strap.	▶ Most secure fastening method.	
• Meets or exceeds SNELL M2015, D.O.T. and ECE certifications.		
• High-tech, lightweight and tough.	▶ Less stress on neck and shoulder muscles.	**X-1 Zone** **448387 • D.O.T.** **$109.99** **X-1** **447942 • D.O.T.** **$99.99**
• Adjustable, aero-tuned visor.	▶ Added stability and aerodynamic performance.	
• Ventilation system.	▶ Airflow for cooling.	
• Moisture-wicking and breathable chin strap, liner and cheek pads.		
• Easily removable and washable liner and cheek pads.	▶ Keeps your helmet fresh.	
• Provides maximum visibility.		
• Fits all goggles.		
• Strap grip keeps goggle strap in place.	▶ Keeps goggles in place.	
• Meets or exceeds D.O.T. certification.		
• Advanced polycarbonate alloy shell.	▶ High-impact resistance.	**Enduro Camo** **448282 • D.O.T. & ECE** **$159.99** **Enduro** **448259 • D.O.T. & ECE** **$149.99**
• Versatile visor design.	▶ Allows for use with goggles or shield.	
• Multi-position, ratcheted face shield.		
• Dual-density EPS foam inner shell.	▶ Enhanced impact absorption.	
• Easily removable and washable liner and cheek pads.	▶ Keeps your helmet fresh.	
• 16-vent intake and exhaust system.	▶ Superior aeration and cooling.	
• S to 3XL, meets D.O.T. and ECE certifications. (3XL, D.O.T. only).		

OPEN FACE HELMET*

You do trail riding or simply work and play on your land, and you want to be able to drink, eat or talk without taking your helmet off? The open face helmet is for you. It also offers maximum airflow.

ST-5 | BASIC, COMFORTABLE AND INEXPENSIVE WITH A COOL RETRO OPTION.



ST-5 OPEN FACE HELMET

- Weight +/- 1050 g in Large size.
- Injection molded shell.
- 3-snap visor included.
- Comfortable head liner and cheek pad fabric.
- Rubber edge molding for best finish.
- Padded chin strap with D-ring closure.
- D.O.T. approved / ECE certified.

Shell: Thermoplastic Composite

447880 • XS, S, M, L, XL, 2XL • Black (90)

$59.99

DOT ECE22.05

ST-2 | LIGHTWEIGHT FIBERGLASS HELMET IN A RETRO DESIGN WITH MODERN DETAILS.



ST-2 OPEN FACE HELMET

- Weight +/- 1200 g in Large size.
- Sport visor peak with sunshield.
- Soft and comfortable head liner and cheek pad fabric.
- Padded chin strap with D-ring closure.
- D.O.T. approved / ECE certified.

Shell: Fiberglass

447884 • XS, S, M, L, XL, 2XL, 3XL • White (01), Black (90)

$114.99

DOT ECE22.05

FULL FACE HELMETS*

If you ride in cold areas, choose the Modular Helmet. Its full coverage, sealed design will keep you warm while providing great vision. With a modular-style helmet, you can easily stop and talk with your riding group or grab a snack.

MODULAR 3 | OUTSTANDING VISION WITH CRYSTAL CLEAR VISOR AND BREATH EVAC SYSTEM TO PREVENT FOGGING.

MODULAR 3 HELMET

- Clear Vision Technology with optically-correct dual lens visor.
- Front push-button release integrated into jaw section facilitates manipulation when wearing gloves.
- Adjustable sunshield lowers or raises at the touch of a button.
- BREATH EVAC fog-resistant mask system and increased vent diameter control breathing airflow.
- Quick-release chin strap.
- Spacious design allows room for eyeglasses.
- D.O.T. approved.

Shell: Polycarbonate Composite

447963 • S, M, L, XL, 2XL, 3XL

White (01),
Grey (09),
Hi-Vis Yellow (26),
Black (90)

$299.99

DOT



MODULAR 3 ELECTRIC SE HELMET

(Not illustrated)

- All the great features of the new Modular 3 helmet, plus an electric shield for extra protection against fogging.

Shell: Polycarbonate Composite

447964 • S, M, L, XL, 2XL, 3XL • Black (90)

$369.99

DOT

*Some models and accessories shown may not be available or homologated in your country. Contact your BRP dealer or local authorities for information.



SENA 20S BLUETOOTH COMMUNICATION SYSTEM

- Super-versatile, water-resistant multi-function Bluetooth communication, navigation and music system designed for outdoor and vehicle sound environment use.
- Driver-to-passenger and driver-to-driver communication at a range over 1.2 miles (2 km).
- Up to 12-hour talk and 10-day stand-by time on a single charge – permits simultaneous charge and play.
- 4-way conference, smartphone, intercom-to-phone connection, GPS and mp3 music playback via AVRCP operation, or easy-adjust manual operation with exclusive Jog Dial.
- Bluetooth technology allows for seamless connection with stereo headset, mp3 players, and smartphones.
- Voice-prompt feedback, clear and natural sound quality, individual volume control for each audio source, fully-integrated audio booster delivers optimal sound level – fully firmware-upgradable.
- Complete with integrated microphone, wired microphone, wired boom microphone, speakers, plus mp3, earbud, and GPS ports.

NEW

SENA 20S BLUETOOTH COMMUNICATION SYSTEM

Single Pack

448207 • One size
Black (90)
$299.99

Dual Pack

448208 • One size
Black (90)
$549.99



BLUETOOTH COMMUNICATION SYSTEM

- Bluetooth v3.0 Stereo Headset with long-range Bluetooth Intercom.
- 4-way conference intercom.
- Multipoint for mobile phone and GPS.
- Voice prompts.
- Bluetooth stereo headset for Bluetooth audio devices such as MP3 players.
- Bluetooth music playback control by AVRCP: play, pause, track forward and track back.
- Easy operation through versatile Jog Dial (Patent Pending).
- Sufficient sound level with integrated audio booster.
- Bluetooth handsfree for Bluetooth mobile phones.
- Bluetooth headset or stereo headset for Bluetooth GPS navigation.
- Stereo music through 3.5 mm audio cable.
- Crystal clear and natural sound quality.
- Up to 12 hours talk time, 10 days stand-by time.
- Can be used while charging.
- Individual volume control for each audio source.
- Bluetooth specification v3.0.
- Firmware upgradable.



BLUETOOTH COMMUNICATION SYSTEM

Single Pack

447714
One size • Black (90)
$209.99

Dual Pack

447715
One size • Black (90)
$379.99

*Some models and accessories shown may not be available or homologated in your country. Contact your BRP dealer or local authorities for information.

GOGGLES



CAN-AM RACE SAND GOGGLES BY SCOTT

- Integrated custom painted frame and strap graphics.
- No Fog† anti-fog lens treatment.
- 100% UV protected grey Lexan† lens.
- Multi-layer face foam.
- Durable anti-slip strap.
- Tear-off and roll-off compatible (sold separately).
- Dust catcher vent foam.

448224 • One size • Yellow (10), Charcoal Grey (07)

$64.99





CAN-AM ADVENTURE GOGGLES BY SCOTT

- No Fog anti-fog lens treatment.
- Clear Lexan lens.
- Multi-layer face foam.
- Durable anti-slip strap.
- Tear-off and roll-off compatible (sold separately).

447900

One size • White (01), Yellow (10), Black (90)

$54.99







CAN-AM ADVENTURE SPEED STRAP GOGGLES BY SCOTT

- No Fog anti-fog lens treatment.
- Clear Lexan lens.
- Multi-layer face foam.
- Durable rubber-threaded strap.
- Tear-off and roll-off compatible (sold separately).
- Clever and easy attachment system.

447934
One size
White (01), Yellow (10), Black (90)
$79.99







CAN-AM ADVENTURE OVER THE GLASSES GOGGLES BY SCOTT

- Same great features as the Can-Am Adventure goggles, engineered to fit comfortably with prescription eyeglasses.

447901
One size • Black (90)
$54.99



SPEED STRAP HELMET ATTACHMENT SYSTEM

- Quick fastening system features enhancements not found in other similar systems.
- Proven pivot design provides secure and easy-to-use durable attachment to any helmet.
- On-the-fly strap tension adjustment for riders on the go.

447912
One size • Black (90)
$20.99



CAN-AM TRAIL GOGGLES BY SCOTT

- 100% UV protected clear Lexan lens.
- Hypoallergenic super-soft face foam.
- Durable anti-slip strap.
- Tear-off and roll-off compatible (sold separately).

447899
One size
White (01), Yellow (10), Black (90)
$34.99









CAN-AM WORKS FILM SYSTEM BY SCOTT

- 1 anti-stick replacement lens.
- 2 rolls of film.
- 1 mud flap.
- 6 tear-offs.

447908
One size • Clear (00)
$43.99



CAN-AM WORKS SINGLE LENS TEAR-OFF BY SCOTT

- 1 clear replacement lens.
- 6 tear-offs.
- 2 posts included.

447910
One size • Clear (00)
$19.99



GOGGLES REPLACEMENT SINGLE LENS

- Impact-resistant polycarbonate.
- No Fog anti-fog lens treatment.

447905
One size • Clear (00), Grey (09)
$10.99

448225
One size • Mirror Silver (22)
$19.99



GOGGLES REPLACEMENT DUAL LENS

- Impact-resistant polycarbonate.
- No Fog anti-fog lens treatment.

447906
One size • Clear (00), Pink (36)
$20.99

Replacement parts are compatible with all Can-Am Goggles by Scott, except Junior Goggles.

GLOVES

NEW

X-RACE GLOVES

- Air mesh panels and perforated palm for ventilation and mobility.
- Double Clarino† layer at palm and thumb for extra durability and comfort.
- Knuckle gussets for better mobility.
- Pre-curved design.
- Silicone at fingertips for added grip and control.
- Direct-injection details on back hand.
- Hook-and-loop wrist closure system to keep glove in place.

MEN'S'
Air Mesh, Spandex, Clarino
286561
S, M, L, XL, 2XL
Charcoal Grey (07), Blue (80)
$44.99



LADIES'
35% Synthetic Leather, 30% Polyester, 15% Lycra, 10% Nylon, 10% Neoprene
286617
S, M, L, XL, 2XL
Pink (36), White (01)
$34.99





NEW

TEAM GLOVES

- Spandex construction for flexibility.
- Chamude palm.
- Pre-curved design.
- Non-fading sublimated graphics.
- Easy slip-on/slip-off convenience.

Shell: Spandex, Chamude, Polyester
286554 • S, M, L, XL, 2XL, 3XL
Charcoal Grey (07)
$26.99



RANCH HEAVY DUTY GLOVES

- Full leather gloves.
- Durable double-layer sueded palm.
- Elastic wrist for slip-on/slip-off convenience.

100% Cow Leather
286563 • S, M, L, XL, 2XL, 3XL
Beige (02)
$19.99

ACTION GLOVES

- Lightly insulated back-of-hand for chilly days.
- Protective neoprene-covered knuckles.
- Stretch fabric improves mobility.
- Comfortable dual-layer Clarino on palm and thumb improves durability.
- Pre-curved design.
- Hook-and-loop wrist closure keeps glove secure.

71% Nylon, 18% Polyurethane, 4% Spandex, 4% Chloroprene Rubber, 3% Polyester
Insulation: 65% Olefin, 35% Polyester
286580 • S, M, L, XL, 2XL, 3XL
Black (90)
$49.99



MOSSY OAK CAMO GLOVES

- Matches ATV/Side-by-side Mossy Oak Break-Up Country Camo pattern.
- 4 oz insulation keeps out the cold.
- Quick, easy forefinger trigger* access.
- Extra-durable leather-layered palm provides added grip.
- Hipora™ waterproof/windproof/breathable insert.
- Velcro† wrist adjustment.
- Pre-shaped fingers.
- Large gauntlet ensures proper jacket-sleeve overlap.

* Forefinger area not completely waterproofed.

85% Polyester, 15% Leather
Insulation: 100% Polyester
286572 • M, L, XL, 2XL, 3XL • Mossy Oak Break-Up Country Camo (37)
$49.99



WINTER RIDING GLOVES AND MITTS

- mcFIT† technology to improve grip at palm.
- Extra warm nylon gloves with leather palm.
- Removable antibacterial, stay-dry moisture management lining.
- Gloves with visor-wiping cotton terry left thumb for clearing water, snow or fog.
- Reflective details.

Nylon, Leather
Insulation: Primaloft Gold



mcFit stands for Maximum Comfort Fit because the membrane and outer shell are laminated together. Gloves using this technology are more flexible and ultimately result in a better feel.



GLOVES
286582
S, M, L, XL, 2XL
Black (90)
$89.99

MITTS
286583
S, M, L, XL, 2XL
Black (90)
$79.99





NEW

X-RACE JERSEY

- Ultralight, quick-dry, antibacterial and moisture-wicking fabric.
- Mesh fabric for maximum breathability.
- Extended back for coverage while riding.
- Non-fading sublimated graphics.
- Rib cuffs.

100% Polyester

286614 • S, M, L, XL, 2XL, 3XL
Orange (12), Blue (80)

$49.99



NEW

TEAM JERSEY

- Quick-dry, antibacterial moisture-wicking fabric.
- Extended back for coverage while riding.
- Non-fading sublimated graphics.
- Rib cuffs.

100% Polyester

286553 • S, M, L, XL, 2XL, 3XL • Khaki (05), Yellow (10)

$44.99

MOSSY OAK CAMO JERSEY

- Ultralight, quick-dry, antibacterial moisture-wicking fabric.
- Extended back improves coverage.
- Non-fade sublimated Mossy Oak Break-Up Country Camo fabric matches ATV/Side-by-side pattern.

100% Polyester

286606 • M, L, XL, 2XL, 3XL
Mossy Oak Break-Up Country Camo (37)

$44.99



NEW

LADIES' TEAM JERSEY

- Semi-fitted lady's cut.
- Quick-dry, antibacterial, moisture-wicking fabric for maximum comfort.
- Mesh fabric for extra ventilation underarms and side seam.
- Rib cuff.

90% Polyester, 10% Spandex

286616 • XS, S, M, L, XL, 2XL
Pink (36), Teal (74)

$44.99



JACKETS & PANTS



RPM

MOSSY OAK CAMO JACKET

- Stealthy-silent waterproof Mossy Oak Break-Up Country Camo fabric matches ATV/Side-by-side pattern.
- Fully-sealed seams.
- Sleeve and side seam ventilation evacuates moisture.
- Detachable hood and molded visor with height-adjustment drawstring.
- Adjustable cuff with hook-and-loop tab.
- Chest pockets, 2 expandable lower pockets, plus hand-warmer pockets.
- Designed for backpack wear with easy access to vents and pockets.
- Articulated elbow with longer back tailored for riding position.

100% Polyester

286544 • M, L, XL, 2XL, 3XL
Mossy Oak Break-Up Country Camo (37)
$169.99



RPM

MOSSY OAK CAMO PANTS

- Stealthy-silent waterproof Mossy Oak Break-Up Country Camo fabric matches ATV/Side-by-side pattern.
- Fully-sealed seams.
- Dual easy-access cargo pockets.
- Knee-high side zipper.
- Thinner knee and seat foam for added comfort.
- Removable suspenders.
- Articulated knee and raised back waist ideal for riding position.
- Brushed tricot lining.
- Belt loops.
- Adjustable bottom leg system.

100% Polyester

286545 • M, L, XL, 2XL, 3XL
Mossy Oak Break-Up Country Camo (37)
$139.99









You can zip off sleeves to wear this jacket as a vest in warmer conditions and sleeves can be stored in lower back large pocket.

RPM

MEN'S RIDING JACKET

- Highly resistant, Teflon†-treated with RPM waterproof and breathable technology.
- Double-stitch construction throughout.
- Critical seams sealed.
- Double front flap and adjustable wrists and hem.
- Small opening at left shoulder for hydration pack water delivery tube (not included).
- Large ventilation at chest, sleeves and back for maximum breathability and good airflow.
- Shaped sleeves.
- Sleeves can be stored in lower large back pocket.
- Multiple pockets.
- Mesh lining.
- Reflective details.
- Jacket-to-pants connector.

100% Nylon

286390 • XS, S, M, L, XL, 2XL, 3XL • Yellow (10), Camo (37), Black (90)

$199.99



RPM

MEN'S ADVENTURE PANTS

- Lightweight durable pants with RPM waterproof and breathable technology.
- Stretch waterproof panel at crotch and upper back for ease of movement.
- Triple stitched construction at crotch.
- Critical seams sealed.
- Shaped knees with darts.
- Binding hem at cuff for reinforcement.
- Storm gaiters at bottom opening.
- Velcro† side waist adjustment.
- Side leg 2-way zipper to facilitate exit.
- Jacket-to-pants connector.
- Mesh lining.
- Belt loops.

100% Nylon

286391 • 28, 30, 32, 34, 36, 38, 40, 42, 44
Yellow (10), Camo (37), Black (90)

$169.99





RANCH HEAVY DUTY JACKET

- Heavy-duty stain and water-repellent cotton canvas.
- Lightly insulated.
- Rear armhole gusset enhances mobility.
- Shaped sleeves and back tail for riding comfort.
- Multiple pockets.

100% Cotton
Insulation: 100% Polyester

286551
S, M, L, XL, 2XL, 3XL
Brown (04)

$129.99





RANCH HEAVY DUTY PANTS

- Heavy-duty stain and water-repellent cotton canvas.
- 2 side-leg cargo pockets.
- Belt loops.
- Pre-shaped legs.

100% Cotton

286556
28, 30, 32, 34, 36, 38, 40, 42, 44
Brown (04)

$79.99



NEW RPM

STORM JACKET

- RPM MAX waterproof, windproof and breathable technology.
- Windproof DWR-treated polyester fabric.
- Fully-sealed seams.
- Double front-flap with interior rain gutter.
- Minimalist design helps repel mud and water.
- Zippered pockets at left chest and waist.
- Inner pocket with Velcro closure.
- Gussets at back armhole for ease of movement.
- Pre-shaped sleeves.
- Can-Am print at front.
- Embossed Can-Am patch at back.
- Adjustable wrists and hem.

100% Polyester

286611
S, M, L, XL, 2XL, 3XL
Khaki (05)
$129.99



NEW RPM

STORM PANTS

- RPM MAX waterproof, windproof and breathable technology.
- Windproof DWR-treated polyester fabric.
- Fully-sealed seams.
- Zippered pocket on left leg.
- Adjustable suspenders with bib.
- Y-shape strap designed to stay securely on shoulders.
- Storm gaiters at bottom opening.
- Self-fabric gusset at crotch keeps out water and mud.
- Pre-shaped legs.
- Can-Am print at right leg.
- Reinforced inner-leg fabric.

100% Polyester

286612
S, M, L, XL, 2XL, 3XL
Khaki (05)
$129.99





CAN-AM WINDPROOF JACKET

- Windproof DWR-treated nylon.
- Adjusted fit.
- Sealed critical seams.
- Hand pockets, plus interior Napoleon pocket.
- Large high-visibility reflective stripes on shoulders.
- Adjustable wrists and hem.
- Jacket-pant connector.
- Pre-shaped sleeves.
- Can-Am branded on front-rear.

100% Nylon

286578
XS, S, M, L, XL, 2XL, 3XL
Black (90)
$129.99



CAN-AM WINDPROOF PANTS

- Windproof DWR-treated nylon.
- Adjusted fit.
- Durable 500-denier seat fabric.
- Sealed critical seams.
- Thigh pocket.
- Elasticized waist with belt loop.
- Fitted to be worn over pants.
- Pre-shaped legs.
- Can-Am branded pocket.

100% Nylon

286579
28, 30, 32, 34, 36, 38, 40, 42, 44
Black (90)
$99.99





RPM

LADIES' RIDING JACKET

- Highly resistant, Teflon†-treated nylon with RPM waterproof and breathable technology.
- 500-denier nylon at hem and double stitch construction throughout.
- Critical seams sealed.
- Double front flap and adjustable wrist, hem and collar.
- Easy access collar adjustment on both sides.
- Brushed polyester at inner collar, pocket and wrist for extra comfort.
- Gussets at back armhole for ease of movement.
- Shaped elbows with expandable contrasting gussets.
- Long ventilation at side and underarm, plus additional ventilation at back for maximum airflow.
- 2 waist pockets and 1 interior zippered pocket.
- Jacket-to-pants connector.
- Reflective piping.
- Mesh lining.

100% Nylon

286294 • XS, S, M, L, XL, 2XL
Black (90)

$169.99



RPM

LADIES' CROSS PANTS

- Lightweight durable pants with RPM waterproof and breathable technology.
- 500-denier waterproof nylon at seat and bottom inseam.
- Stretch fabric waistband.
- Critical seams sealed.
- Water-resistant thigh zipper vent.
- Hip pocket with zipper and flap.
- Jacket-to-pants connector.
- Binding hem at cuff for reinforcement.
- Storm gaiters at bottom opening.
- Shaped knees with darts.
- Mesh lining.
- Belt loops.

100% Nylon

286478
4, 6, 8, 10, 12, 14 • Black (90)

$149.99



MUD JACKET

- 100% waterproof PVC.
- Electronically-welded seams.
- Underarm and rear vent panels.
- 2 hand pockets.
- Elastic cuffs.
- Drawstring hood and hem.

Polyvinyl Chloride (PVC), Mesh Polyester

286127 • S, M, L, XL, 2XL
Clear (00), Matte Black (93)

$29.99



MUD PANTS

- Oversized pants made of 100% waterproof PVC.
- Electronically-welded seams.
- Strategically placed ventilation.
- Side openings at bottom leg.

Polyvinyl Chloride (PVC)

286128 • S, M, L, XL, 2XL
Clear (00), Matte Black (93)

$14.99









CAN-AM RIDING BOOTS

- Rider-tough 8" lace-up-style riding boots.
- VIBRAM† Bifida† outsoles for superior performance.
- COSMO† HydroGuard† waterproofing.
- Full-grain leather upper (waterproof nubuck in beige model).
- Removable Meramec† Ultron† insoles.
- High-gusseted tongue keeps outs water and debris.
- Ultra-comfortable padded collar.
- Steel toecaps.
- Abrasion-resistant TPU toe protectors.
- Double heavy-duty stitching in higher-stress areas.
- Abrasion-resistant laces.

100% Leather

444197 • 7, 8, 9, 10, 11, 12, 13*
Beige (02), Black (90)
$184.99

CATCH THE VIDEO AT STORE.CAN-AM.BRP.COM

*For European footwear equivalencies see p. 217



CAN-AM NEOPRENE MUD BOOTS

- 100% waterproof polyurethane boot.
- Neoprene upper for maximum flexibility while walking or riding.
- Lightweight and comfortable soft liner.
- Aggressive tread design for maximum grip on any surface.
- Excellent resistance to oils, grease and gasoline.

60% Polyurethane, 40% Neoprene

444196
8, 9, 10, 11, 12, 13*
Black (90)
$119.99

444201
8, 9, 10, 11, 12, 13*
Next G-1 Vista Camo (37)
$129.99



NEW

WINTER RIDING JACKET

- Robust textured fabric featuring RPM waterproof, windproof and breathable technology.
- Critical seams sealed for added protection.
- Vents at underarm to enhance moisture evacuation during rigorous riding or mild weather.
- 2 waist pockets and 1 Napoleon pocket.
- Cap inner pockets.
- Cold-blocking front flap with insulated under flap uniquely designed for off-road riding windproofness.
- Powder skirt to keep wind, cold and snow from entering.
- Reflective details.
- Micro-polyester at collar and micro-fleece integrated inner wrists.
- Inside front and back panels lined with micro-fleece to add warmth and comfort.
- Easy-access collar adjustment on both sides.
- Bottom and wrist adjustments.
- Can-Am print at front and on sleeve.
- Can-Am embroidery at back.

60% Polyester, 40% Nylon
Insulation: Primaloft Black

286609 • S, M, L, XL, 2XL, 3XL • Black (90)

$259.99



NEW

WINTER RIDING HIGHPANTS

- RPM waterproof, windproof and breathable technology.
- Intelligent combination of materials specifically adapted to winter riding.
- Critical seams sealed.
- Reinforced fabric at seat and knees.
- 3/4 length side zippers with adjustable hem.
- Reflective details.
- Storm gaiter with boot lace snap-on webbing to shield snow entry.
- Pre-shaped legs.
- Bib-style pants with high back and front to keep wind and snow out.
- Adjustable suspenders with Y-shape strap designed to stay securely on shoulders.
- Fleece-lined seat.

60% Polyester, 40% Nylon
Insulation: Primaloft Black

286610 • S, M, L, XL, 2XL, 3XL
Black (90)

$239.99



LADIES' WINTER RIDING JACKET

- RPM MAX waterproof, windproof and breathable technology.
- Overall water-repelling Teflon® treatment.
- Teflon HT treatment on light colors for additional water and stain resistance.
- All seams and logo sealed.
- Shaped sleeves.
- Underarm venting.
- MP3, cell phone and additional inner pockets.
- Zippered hand pockets.
- Contrasting water-resistant zipper at chest pocket.
- Micro-fleece at collar and integrated inner wrist.
- Powder skirt.
- Front double flap.
- Adjustable collar.
- Reflective details.

100% Nylon
Insulation: Primaloft Black

286461 • XS, S, M, L, XL, 2XL, 3XL • Matte Black (93)

$259.99



LADIES' WINTER RIDING HIGHPANTS

- RPM MAX waterproof, windproof and breathable technology.
- Technical, comfortable, versatile with feminine cut.
- All seams and logos sealed.
- 1000-denier nylon-lined seat, knees and inner legs.
- Polar-fleece lined seat and knees.
- Stretch-fleece bib.
- Drop seat design.
- Shaped knees.
- 2-way full-length side zippers.
- Adjustable waist.
- Hip pockets.
- Water-resistant zipperat right thigh pocket.
- Reflective details.

90% Nylon, 10% Polyester
Insulation: Primaloft Black

286460 • XS, S, M, L, XL, 2XL, 3XL
Matte Black (93)

$219.99



PRIMALOFT INSULATION

A HIGH-PERFORMANCE INSULATION WITH THE FULL SPECTRUM OF BENEFITS TO BRAVE THE ELEMENTS.

Warmer, drier, softer, and more compressable than any other synthetic insulation.


Warmth without bulk


Water resistant


Breathable

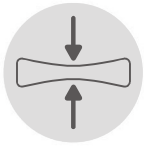
Packable


Lightweight


Superior softness

COMMITTED TO DELIVERING FEEL-GOOD PRODUCTS THAT EMPOWER YOU TO STAY IN THE MOMENT.

BLACK INSULATION

Men's and ladies' Winter Riding Jackets and Highpants use PrimaLoft Black insulation to give you the right amount of warmth and extra breathability.







HIGH PERFORMANCE GEAR WITH RPM TECHNOLOGY

Developed by BRP for powersports riders like you, RPM provides maximum warmth no matter how tough the ride or how cold the environment.

Critical seams and logos sealed

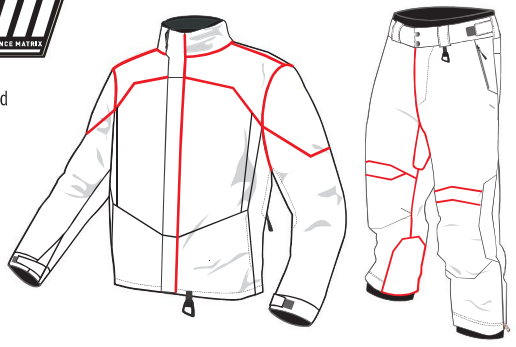

All seams and logos sealed



WHAT'S UNDER THE SHELL COUNTS

To keep warm, you've got to keep dry. Our technical base and mid layers wick perspiration away from your skin, where it can evaporate quickly for all-day warmth.



HOW IT WORKS

Each layer has a function. You get the best performance and versatility when you dress in a system with base layer, mid layer and outer layer.

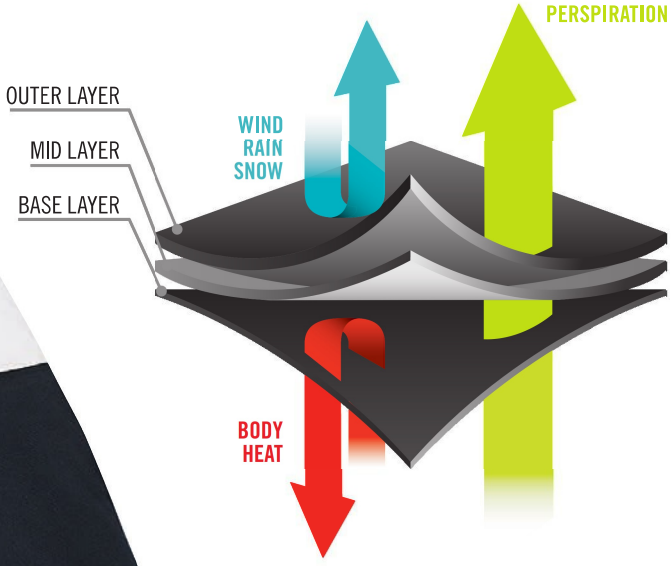

OUTER LAYER

Keeps wind and water out. Adds insulation for warmth.

MID LAYER

Dials in your warmth level. Add or remove during the day as conditions change.

BASE LAYER

Close to the body to wick perspiration and prevent chills. Adds warmth. Avoid cotton — it gets wet and stays wet.

TECHNICAL FIBERS



X-STATIC
X-STATIC eliminates 99.9% of bacteria to prevent odors.



MERINO WOOL
Excellent at regulating body temperature, even when damp.



COCONUT FIBER
Natural material increases breathability by 40%.

BASE LAYER

MEN'S ACTIVE BASE LAYER

- X-STATIC† enhanced through to the fiber to thermodynamically regulate your temperature by conducting body heat out in warm weather and reflecting body heat back to the skin in cold weather.
- Permanently treated for long-lasting antibacterial performance undiminished even after 250 washes.
- Silver woven into fiber immediately binds with odor-causing agents such as ammonia and denatured proteins to instantly reduce odor.
- Mesh panels in specific areas for better ventilation and accelerated drying.
- Compressed for added comfort.

92% Polyester, 6% Spandex,
2% X-STATIC†



TOP
286332
M, L, XL, 2XL, 3XL
Black (90)
$59.99

BOTTOM
286333
M, L, XL, 2XL, 3XL
Black (90)
$54.99

MEN'S ULTRALIGHT BASE LAYER

- Coconut fibered to actively promote evaporative cooling and odor absorption, and to filter moisture out while trapping warmth in.
- Mesh paneled in specific areas for better ventilation and accelerated drying.
- Spandexed for ease of movement.

68% Polyester,
32% Coconut Fiber



TOP
286338
M, L, XL, 2XL, 3XL
Charcoal Grey (07)
$44.99

BOTTOM
286339
M, L, XL, 2XL, 3XL
Charcoal Grey (07)
$34.99

MEN'S & LADIES' THERMAL BASE LAYER

- Made of high-filament polyester enhanced by slight brushing to provide softness and warmth.
- Spandex Spondered for ease of movement.

95% Polyester,
5% Spandex (brushed)

MEN'S TOP
286334
M, L, XL, 2XL, 3XL
Charcoal Grey (07)
$64.99

MEN'S BOTTOM
286335
M, L, XL, 2XL, 3XL
Charcoal Grey (07)
$49.99



LADIES' TOP
286336
XS, S, M, L, XL, 2XL
White (01)
$64.99

LADIES' BOTTOM
286337
XS, S, M, L, XL, 2XL
Charcoal Grey (07)
$49.99



NECK AND BODY CORE PROTECTION



WINDPROOF LAYER

- Coverage for your crucial body core.
- Windproof, warm and breathable layer.
- Stretch fabric and unrestricted arm movement.
- Zipper on shoulder for easy slip on/off, even with a helmet.
- Flatlock seams to prevent skin chafing.

100% Polyester

286348
S, M, L, XL, 2XL • Black (90)
$49.99



NECK GAITER

- 14 oz anti-pilling fleece.
- Spandex binding for a better fit.

100% Polyester

286331
One size • Black (90)
$19.99

SOCKS

ULTRALIGHT SOCKS

- Warm and comfortable moisture-wicking for dry feet at all times.
- Extreme resistance to cold and active management of perspiration moisture.
- Dri-release† wool combines ease of care of synthetic fabric and look of natural fiber.
- Elastic ankle and arch support.
- Stay-up comfort top keeps socks up.

49% Polyester, 25% Polyamide Nylon, 17% Polypropylene,
7% Merino Wool, 2% Elastane

286340 • S/M, L/XL • Black (90)
$9.99



THERMAL SOCKS

- Same thickness as competing thermal socks, but lighter, warmer and with better moisture-wicking performance.
- Elastic ankle and arch support for pro feel.
- Thermolite† hollow-core fibers deliver new generation of warmth-comfort fusion.
- Stay-up comfort top keeps socks up.
- Fully cushioned shin segment.

50% Polyester Thermolite†, 32% Polyamide Nylon,
13% Merino Wool, 3% Acrylic, 2% Elastane

286341 • S/M, L/XL • Black (90)
$19.99



CAN-AM CARRIER 8800 GEAR BAG BY OGIO

- Heavy-duty chassis with oversized treaded wheels.
- Wide mouth U-shaped opening for easy access to all gear.
- Large main ventilated compartment and multi-use dual end pockets.
- Secondary end pocket with accessory organization sleeves for smaller gear.
- iFOM† integrated foam panel construction throughout for added gear protection.
- Telescoping pull handle and padded adjustable shoulder strap.
- Easy grab end handles for transport.
- Dimensions: 15" H x 18" W x 32" D (38 cm x 46 cm x 81 cm).



90% Polyester, 10% Plastic

447854
One size
Black (90)
$164.99



CAN-AM CARRIER DUFFLE BAG BY OGIO

- High tensile strength, durable, lightweight construction.
- Ventilated shoe compartment (holds 2 pairs).
- Zippered front accessory pocket.
- Large main compartment with additional end storage pocket.
- Padded, ventilated, and adjustable shoulder strap.
- Molded carry handle.
- Durable abrasion-resistant base.
- High visibility liner.
- Dimensions: 11" H x 9.75" W x 25" D (28 cm x 25 cm x 64 cm).



100% Polyester

447856
One size
Black (90)
$69.99

CAN-AM CARRIER 9800 GEAR BAG BY OGIO

- Structural Load Equalization Deck (SLED) wheeled chassis system.
- Wide mouth lid opening for easy access to all compartments and specialty pockets.
- iFOM integrated foam panel construction throughout entire bag for added protection.
- Adjustable main compartment dividers for custom organization.
- Multiple zippered mesh organization pockets for garment, shoes, and accessories.
- Front accessory pocket and secure hold compression straps.
- Oversized heavy-duty treaded wheels.
- Telescoping pull handle.
- Dimensions: 16" H x 17" W x 36" D (40 cm x 43 cm x 91 cm).

75% Polyester, 25% Plastic

447853
One size
Black (90)
$274.99

CAN-AM CARRIER DRY BACKPACK BY OGIO

- Completely waterproof rolltop design.
- Constructed of 420-denier nylon for durability.
- Dual-density shoulder straps and adjustable sternum strap.
- Quick-access front pocket.
- Organization panel with 2 zip pockets on inside.
- Laptop and tablet sleeves.
- 360-degree reflective print.
- Removable high-visibility liner.
- Dimensions: 20.5" H (rolled) x 10.5" W x 6.75" D (52 cm x 27 cm x 17 cm).



100% Polyester

469544
One size
Black (90)
$139.99

CAN-AM CARRIER HEAD CASE BY OGIO

- Oversized helmet bag fits all helmet brands and sizes with fins and without.
- iFOM integrated foam panels and additional fleece interior provide the ultimate protection.
- Protective zipper teeth closure prevents scratches from zippers.
- Easy access oversized external sleeve pocket.
- Exterior zippered accessory pocket.
- Durable reinforced bottom.
- Dimensions: 11" H x 13" W x 19" D (28 cm x 33 cm x 48 cm).



100% Polyester

447857
One size
Black (90)
$49.99

CAN-AM CARRIER BACKPACK BY OGIO

- Padded interior laptop compartment fits most 17" laptops.
- iFom integrated panels keep your electronics and other valuables protected.
- Padded iPad†, tablet or e-reader sleeve.
- Large main compartment.
- Comfortable padded back panel.
- Adjustable ergonomic shoulder straps.
- Zippered fleece lined top pocket for valuables.
- Dual side beverage or accessory holders.
- Dimensions: 19" H x 13" W x 7.5" D (48 cm x 83 cm x 19 cm).



100% Polyester

447858
One size
Black (90)
$79.99

CAN-AM HELMET CASE

- Easy-to-carry ergonomic handle.
- Outer pocket for helmet accessory.



100% Polyester

447678
One size
Black (90)
$29.99

HOW TO MEASURE

· For best results, have someone else take measurements.
· Measure body in underwear.
· Tape must be snug but not tight.
· If measurements fall between two sizes, order the larger size.

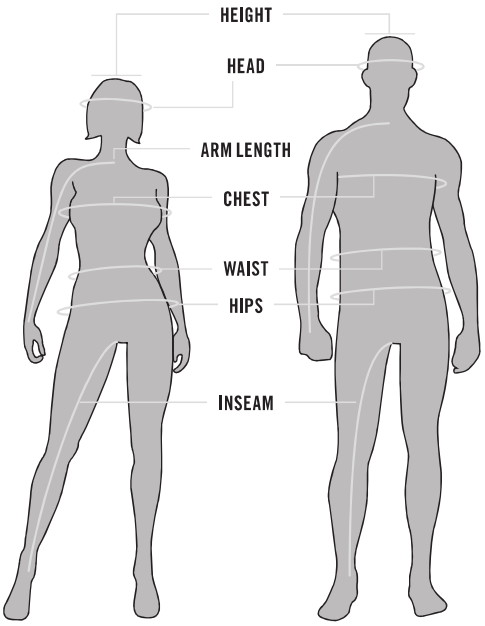

Chest/Bust: Measure under your arms, around the fullest part of your chest.

Waist: Measure around your natural waistline, keeping one finger between the tape and body.

Gloves: Measure palm width.

Inseam: Without shoes, from crotch to the floor.

Arm length: Hand on hip, from center back neck bone, along shoulder point round elbow to bottom of wrist bone.

Head: Around your head, from the center of the forehead, above the ears and over the natural bump at the back of the head.

WHAT CODE REPRESENTS YOUR SIZE?

1. Find your size.
2. The corresponding code is **THE CODE** you use to complete the part number on your order.
   Example: 440227__90 Size: M = Code "**06**", therefore 4402270690

SIZE	CODE	SIZE	CODE	SIZE	CODE
One Size	00	**L/XL**	73	**10**	30
XS	02	**2**	21	**10.5**	99
XS/S	90	**3/4**	79	**11**	31
S	04	**5/6**	52	**12**	32
M	06	**6/8**	48	**13**	33
MT	07	**7/8**	54	**14**	34
L	09	**9/10**	55	**28**	36
LT	10	**10/12**	49	**30**	37
XL	12	**11/12**	56	**32**	38
XLT	13	**13/14**	80	**34**	39
2XL	14	**14/16**	50	**36**	40
3XL	16	**4**	23	**38**	41
4XL	18	**6**	25	**40**	42
5XL	88	**7**	27	**42**	43
S/M	72	**8**	28	**44**	44
M/L	91	**9**	29		

MEN'S - REGULAR 5'8" - 6'0" BODY MEASUREMENTS (INCHES)

	S	M	L	XL	2XL	3XL
CHEST	35-37	37-40	40-44	44-48	48-52	52-56
WAIST	29-31	31-34	34-38	38-42	42-46	46-50
HIPS	35-37	37-40	40-44	44-48	48-52	52-56
ARM LENGTH	31	32	33	34	35	35
INSEAM	31 1/2	32	32	32	32	32 1/2

MEN'S - REGULAR - TALL 6'1" - 6'4"

	MT	LT	XLT
CHEST	37-40	40-44	44-48
WAIST	31-34	34-38	38-42
HIPS	37-40	40-44	44-48
ARM LENGTH	33 1/2	34 1/2	35 1/2
INSEAM	34	34	34

MEN'S - REGULAR NUMERIC (PANTS) 5'8" - 6'0"

	28	30	32	34	36	38	40	42	44
CHEST	35-36	36-38	38-39	39-41	41-43	43-45	45-47	47-49	49-51
WAIST	28-30	30-31 1/2	31 1/2 -33	33-35	35-37	37-39	39-41	41-43	43-45
HIPS	35-36	36-38	38-39	39-41	41-43	43-45	45-47	47-49	49-51
INSEAM	31	31 1/2	32	32	32	32	32	32	32

LADIES' - REGULAR 5'4" - 5'8"

	XS	S	M	L	XL	2XL	3XL
CHEST	32-34	34-36	36-39	39-42	42-45	45-49	49-53
WAIST	24-26	26-28	28-30	30-34	34-37	37-41	41-45
HIPS	34-36	36-38	38-40	40-44	44-47	47-51	51-55
ARM LENGTH	31	31	31 1/2	32	32 1/2	33	34
INSEAM	30	30	30	30	30	30 1/2	30 1/2

LADIES' - REGULAR NUMERIC (PANTS) 5'4" - 5'8"

	4	6	8	10	12	14
CHEST	32-34	34-36	36-38	38-40	40-42	42-44
WAIST	24-26	26-28	28-30	30-32	32-34	34-36
HIPS	34-36	36-38	38-40	40-42	42-44	44-46
INSEAM	30	30	30	30	30	30

MEN'S GLOVES (MEASURE PALM WIDTH)

	S	M	L	XL	2XL	3XL
INCHES	3	3 3/8	3 3/4	4 1/8	4 1/2	5 1/2

LADIES' GLOVES (MEASURE PALM WIDTH)

	S	M	L	XL	2XL
INCHES	2 5/8	3	3 1/4	3 1/2	4 1/2

JUNIOR HELMETS

	S	M	L
HAT SIZE	6 1/8 - 6 1/4	6 3/8 - 6 1/2	6 5/8 - 6 3/4
HEAD (INCHES)	19 1/4 - 19 3/4	20 - 20 1/2	20 7/8 - 21 1/4

TEEN GLOVES

	6-8	10-12	14-16
INCHES	3 1/8	3 3/8	3 5/8

SOCKS

S/M	L/XL
6 - 9	10 - 13

HELMETS

	XS	S	S/M	M	M/L	L	XL	2XL	3XL
HAT SIZE	6 5/8 - 6 3/4	6 7/8 - 7	7 1/8	7 1/8 - 7 1/4	7 1/4	7 3/8 - 7 1/2	7 5/8 - 7 3/4	7 7/8 - 8	8 1/8 - 8 1/4
HEAD (INCHES)	20 7/8 - 21 1/4	21 5/8 - 22	22 3/8	22 3/8 - 22 3/4	22 3/4	23 1/8 - 23 5/8	24 - 24 3/8	24 3/4 - 25 1/8	25 1/2 - 25 7/8

KIDS/TEEN

	2	3/4	5/6	7/8	10/12	14/16
CHEST	21	22 - 23	24 - 25	26 - 27	28 1/2 - 30	31 1/2 - 33
WAIST	20	20 1/2 - 21	21 1/2 - 22	22 1/2 - 23	24 - 25	26 - 27
HIP (SEAT)	21	22 - 23	24 - 25	26 - 27	28 1/2 - 30	31 1/2 - 33
ARM LENGTH	15 1/2	17 - 18 1/2	20 - 21 1/2	23 - 24 1/2	28 1/2 - 30	31 1/2 - 33
INSEAM	13 1/2	15 1/2 - 17 1/2	19 1/2 - 21	22 3/4 - 24 1/2	26 1/4 - 28	29 1/2 - 31

FOOTWEAR EQUIVALENCIES

CAN-AM NEOPRENE MUD BOOT	**US**		8	9	10	11	12	13
	EU		41	42	43	44	45	46
CAN-AM RIDING BOOT	**US**	7	8	9	10	11	12	13
	EU	39.5	41	42.5	44	45.5	47	48.5

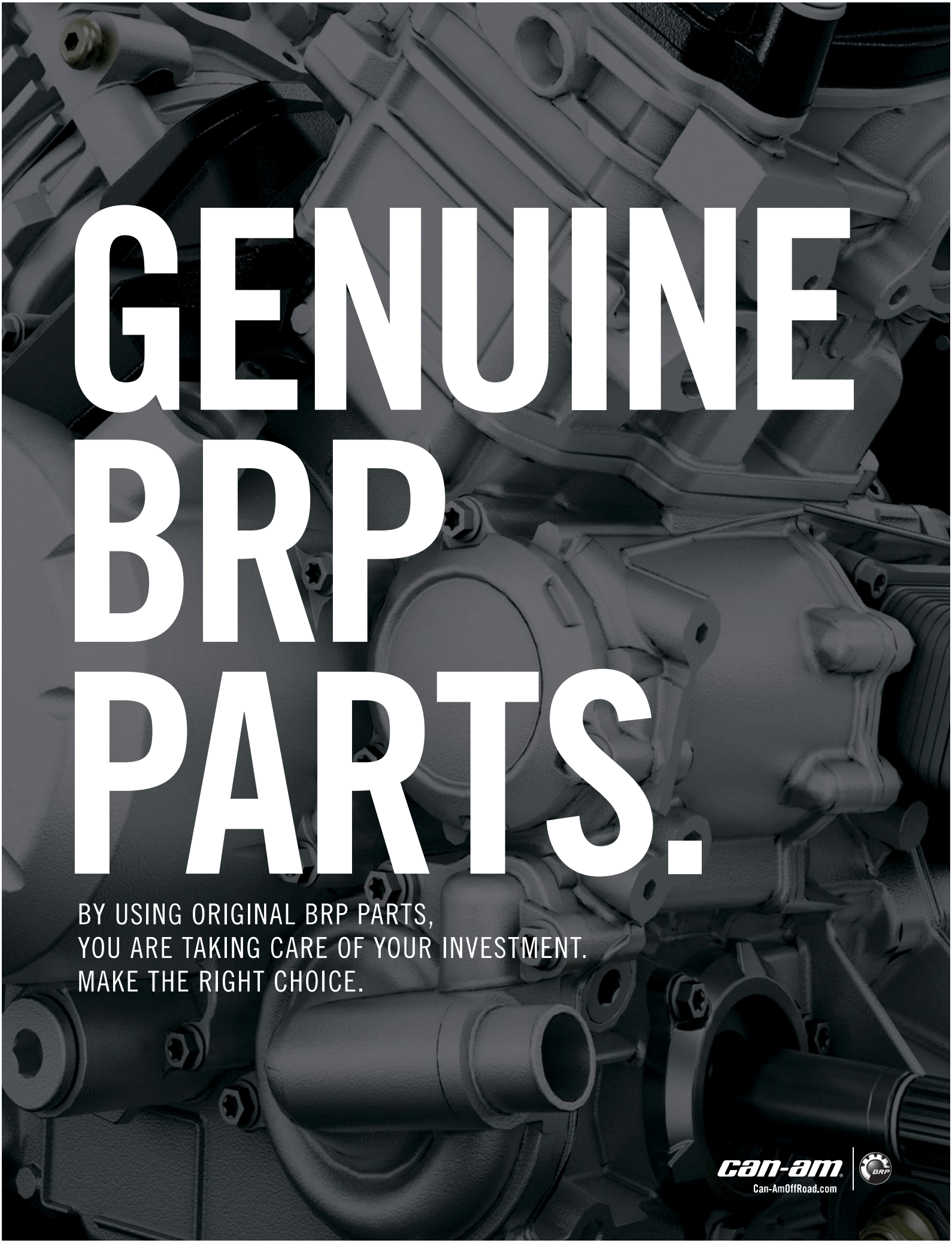
GENUINE
BRP
PARTS.
BY USING ORIGINAL BRP PARTS,
YOU ARE TAKING CARE OF YOUR INVESTMENT.
MAKE THE RIGHT CHOICE.
can-am
BRP
Can-AmOffRoad.com



LEARN MORE ON PAGE 220

PERFORMANCE DRIVE BELT

- High-performance design ideal for off-road use.
- BRP-specific calibration adjusted to best suit your Can-Am vehicle.
- Ask your authorized Can-Am dealer which one fits your vehicle.

715000302	715900024	715900023
$139.99	$59.99	$139.99

PULLER/LOCKING TOOL

(Not illustrated)

- Spreads the secondary clutch open for easy belt replacement.
- Locks engine at TDC for maintenance tasks.

529036098

$18.99

PERFORMANCE DRIVE BELT (100% PBO)

- High-performance belt technology.
- 100% cutting-edge PBO high-tensile strength polymer fibre construction.
- Designed for high-temperature robustness and prolonged durability.
- Ask your authorized Can-Am dealer which one fits your vehicle.

715900212

$169.99

CV BOOT KITS

- Come with clamps and grease.
- Genuine BRP CV Boot Kits ensure absolute compatibility and a perfect fit.
- Ask your authorized Can-Am dealer which one fits your vehicle.





ORGANIC BRAKE PAD KIT

- Chosen as the standard OEM on Can-Am ATV.
- Provides excellent braking capacity with optimal efficiency, a great feel, and low noise.

Fits: G2 2013 & up (except with 400 engine), G2 2012 with 800R or 100 engine (except MAX models), G2L 2015 & up, G2S 2012 & up (except G2S 2012 with 500 engine)

Front Left	Front and Rear Right
705601015	705601014
$39.99	$39.99



METALLIC BRAKE PAD KIT

- Built strong to last long – heavy-duty construction stands up to hard braking.
- Designed to handle demanding riding conditions with challenging braking environments such as mud and dunes.
- Created specifically for use with Can-Am ATV.

Fits: G2 2013 & up (except with 400 engine), G2 2012 with 800R or 100 engine (except MAX models), G2L 2015 & up, G2S 2012 & up (except G2S 2012 with 500 engine)

Front Left	Front and Rear Right
715900248	715900249
$39.99	$39.99

AIR FILTERS

- Prevent airborne contaminants from reaching your engine.
- Protect internal components against premature wear.
- Genuine BRP air filters ensure absolute compatibility and a perfect fit.
- Ask your authorized Can-Am dealer which one fits your vehicle.



TOUCH UP PEN

- Ideal for do-it-yourself small paint repairs caused by rock chips and scratches on your bumpers, roll cage, a-arms, springs, beadlocks, etc.
- Genuine Can-Am color perfectly matches original paint for seamless coverage.
- For use on metal parts only.

529036363 · Can-Am Red
529036362 · Manta Green
529000084 · Octane Blue

$17.99



YUASA† BATTERIES

- Top of the line models from the leading preferred original equipment battery supplier in North America.

18 Amps. Wet
(YTX20L-BS) · 410301203

$115.99

19 Amps. Dry
(YB16CL-B) · 278001756

$76.99

13 Amps. Wet
(YTX15L-BS) · 710000283

$120.99







NEW

30 AH BATTERY UPGRADE

- Requires 1 additional bolt and 1 washer (207562054 & 234062410).
- Please refer to your user manual for removal and insulation.
- Stock on XT & XT CAB.

Fits: UR (Base & DPS models)

515176151

$161.99



YUASA† AUTOMATIC 1 AMP BATTERY CHARGER

- Keeps your battery charged and ready to ride.
- Hook it up - plug it in – charge. Includes adapter and clips.
- 3-stage charge cycle switches automatically to maintenance mode.
- Easy-to-read 3-color LED charge monitor.
- Built-in overcharge prevention.

529036307

$41.99

DRIVE BELTS

The drive belt is an integral part of your off-road vehicle's transmission and its importance for achieving its maximum performance can't be overstated. All the tuning or changes made in gearing, weights, ramps and springs in the world don't matter if the belt can't consistently maintain its performance.

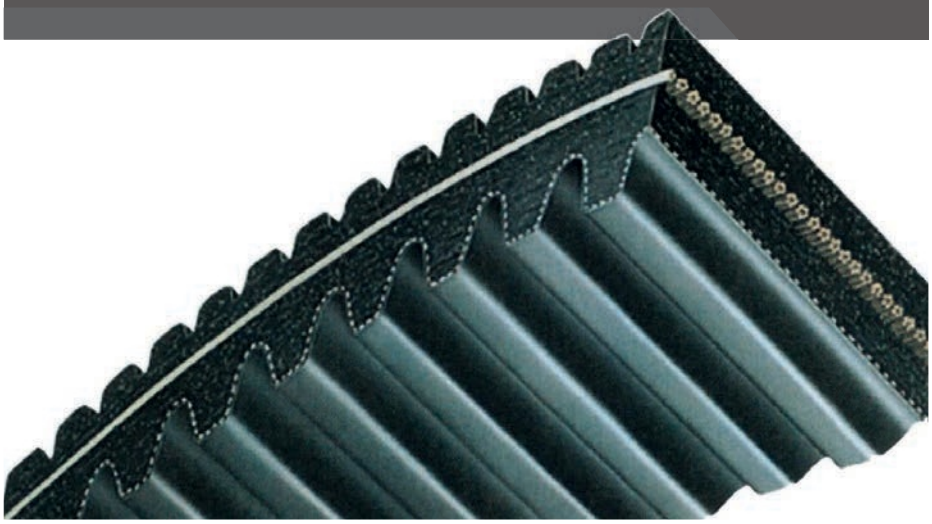

SO, WHAT MAKES A BELT STAND OUT?

You see that several elements include "Aramid." Aramid is a man-made fiber resistant to heat and abrasion. It is used to add strength and long life to the rubber belt. Aramid fibers and fabrics are common in belts.

- **Top Cog with Special Aramid Fiber**
- **Adhesion Rubber**
- **Specialized High Modulus Aramid Cord**
- **Compressive Rubber with High Modulus PBO Fiber**
- **Bottom Cog With Aramid Fabric**

BRP BELT CONSTRUCTION VS. COMPETITORS

	Brand A	Brand A C12	Brand B	BRP
Top Rubber Chopped Fiber	CR Aramid	CR Aramid	H-NBR Aramid/Cotton	CR Aramid
Upper Adhesion Rubber Chopped Fiber	CR	CR	H-NBR	CR
Cord	Aramid	Carbon	Aramid	Aramid
Lower Adhesion Rubber Chopped Fiber	CR	CR	H-NBR	CR
Bottom Rubber Chopped Fiber	CR Aramid	CR Aramid	H-NBR Aramid/Cotton	CR PBO Aramid
Bottom Fabric	Acrylic 1 ply	Acrylic 1 ply	CR Aramid/Cotton	Aramid/PET 1 ply

CR: Chloroprene Rubber

USE THE RIGHT BELT

Just as we calibrate our clutches and gearing to deliver the best possible performance for how a vehicle is ridden, we specialize the belt for the application, too.

Different types of riding create different heat and load conditions our engineers must account for. For instance, higher drivetrain loads, like on Maverick X ds Turbo, going through the dunes on the throttle hard for extended periods of time, generally require belts with a stiff construction and high heat resistance. A utility vehicle pulling equipment or heavily loaded sees high drivetrain loads too, but the clutch calibrations, engine RPM, vehicle speed and environment differ significantly – so will the required belt.

This is why it's best to match the exact model and year of your BRP vehicle to the replacement belt. And even though BRP belts might have the same width and length dimensions, the difference in the materials delivers the best performance and longevity for your vehicle's application and calibrations.

MODULUS & TENSILE STRENGTH
(Based on BRP Dynamometer Testing)

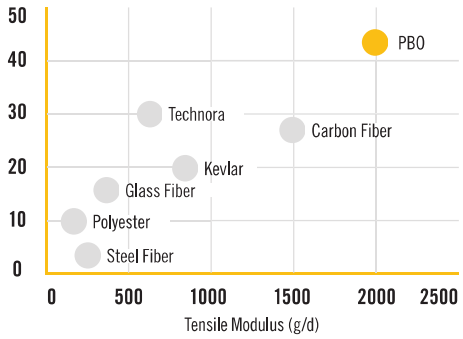

*When compared to BRP's Performance Drive Belt (100% PBO) (715900212).

DURABILITY COMPARISON*

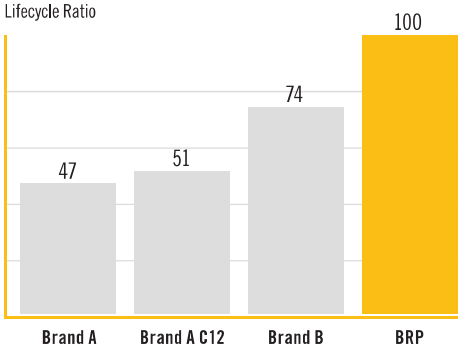



XPS ENGINE OILS AND MAINTENANCE PRODUCTS

The XPS brand has a complete family of performance products to expertly protect, enhance and extend life of your BRP vehicle. Every XPS product has been tested and approved for complete peace of mind. No second guesses, no assumptions. The exact product to use, every time.

XPS ENGINE OILS



XPS 4-STROKE SYNTHETIC OIL

- Specifically formulated and BRP-engineer-certified for use in your Can-Am vehicle.
- Premium synthetic base with custom additives provides unmatched lubrication and enhanced corrosion protection.
- Provides easier starting in cold temperature and enhanced cold start protection.

1 US gallon (3.785 L)
293600115

1 quart (946 ml)
293600112



XPS 4-STROKE SYNTHETIC BLEND OIL

- Specifically formulated and BRP-engineer-certified for use in your Can-Am vehicle.
- Synthetic blend with custom additives provides enhanced corrosion protection.

1 US gallon (3.785 L)
293600122

1 quart (946 ml)
293600121



XPS 4-STROKE OIL CHANGE KIT

- Ultra-convenient "all-in-one" oil-change kit saves time and money.
- Includes XPS Synthetic or Synthetic Blend Oil, oil filter, o-rings and washer.

For Can-Am off-road vehicles with 450 cc and less Rotax engine (except Rally® and DS™ models)

Synthetic Blend • 703500902
$62.99
Synthetic • 703500903
$71.99

For Can-Am off-road vehicles with 500 cc or more Rotax engine (except Traxter® or Quest models)

Synthetic Blend • 703500904
$51.99
Synthetic • 703500905
$59.99

Note: Please contact your dealer or visit our online store for suggested retail prices of oil based products.

USING THE RIGHT OIL MATTERS



The right oil delivers:

THE BEST PERFORMANCE
THE BEST RELIABILITY
THE LONGEST LIFE

It's a balancing act to deliver all three attributes – and only XPS, with its custom blend formulations and carefully matched additives, is specifically designed to do just that in a Rotax engine.

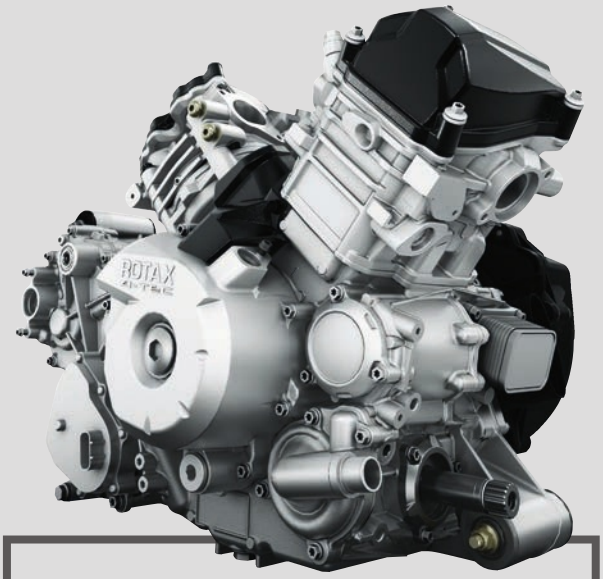

"The best oil is the oil that was specifically designed for the engine, without compromising the engine."

Mischa Zimmermann
Project Leader Engine Development, BRP

DOES ONE OIL FIT ALL?

Our efficient, high-output engines place strong demands on engine oil. At BRP, we treat oil like an actual mechanical part that is developed concurrent with our latest high-performance engine technology.

XPS 4-STROKE OILS

Fact: XPS 4-stroke oils are BRP engineer-certified for unmatched lubrication, the right characteristics for our wet clutches, the right viscosities to best protect our engines from startup to operating temperatures, and they all have extra corrosion protection to better protect your engine.

WHY CHOOSE XPS 4-STROKE ENGINE OILS INSTEAD OF LOWER-COST ALTERNATIVES?

BRP engineers and experts like Mischa Zimmerman have proven repeatedly that other brands of oil don't meet the high standards BRP desires for engines like the Rotax 4-Tec 1000 Turbo.

- Each vehicle manufacturer establishes their own lubrication standards and test criteria to validate OEM oil – this means XPS achieves a much higher standard.
- Even oil that is more expensive than XPS will not have the same custom-matched performance for Rotax engines.
- Our oil is tested on the whole lineup of vehicles and engines we manufacture – not just one or two models. Our specific testing includes real world test miles to ensure XPS meets our performance requirements as opposed to relying only on generalized, minimum specifications that most aftermarket oil brands use.

AREN'T THERE OTHER HIGH QUALITY OILS ON THE MARKET?

Yes. But no other oil is designed as an actual mechanical part during engine development like XPS. Your satisfaction matters.

FIND OUT WHY OIL MATTERS AT WWW.XPSLUBRICANTS.COM

XPS CLEANERS

XPS SPRAY CLEANER & POLISH



- Removes dirt, grease, road grime and water marks easily and quickly.
- Non petroleum based formula will not harm plastic finishes.
- 12 oz. (340 g).

219702844

$9.99

XPS BRAKES & PARTS CLEANER



- A concentrated blend of solvents with a powerful blasting spray that effectively removes grease, grime, brake fluid and other contaminants from brake components and metal parts without the need for disassembly.
- Evaporates instantly and completely, leaving no residue to hinder performance.
- Contains no ozone depleters.
- 14 oz. (400 g).

219701705

$7.99

XPS OFF-ROAD VEHICLE WASH



- A biodegradable non-toxic cleaner that removes mud and dried-on dirt from your off-road vehicle.
- Whether grimy from the track, the woods or the fields, this cleaner will leave your off-road vehicle sparkling.
- When used as directed, XPS Wash is safe for all off-road vehicle finishes.
- 32 oz. (946 ml).

219701702

$9.99

XPS MICROFIBER TOWELS



- The latest in high-quality detailing towels.
- Made up of extremely fine fibers, their soft surfaces have been perfected for drying and polishing painted, gel coated and hard shiny surfaces.
- They are so absorbent they hold up to 7 times their weight in water.
- Machine washable means they can be used over and over again.
- Pack of 2.

219701759

$8.99

XPS MAINTENANCE PRODUCTS

XPS SYNTHETIC GEAR OIL



- Exceeds API GL-5 specs and provides extra protection for a wide range of differential types.
- Formulated for extended drain intervals.
- Additional friction modifiers make it ideal for clutch-type limited slip differentials.
- Allows for higher load capacity, while providing better shear stability, and less oxidation than other synthetic or conventional gear oils.
- Superior thermal stability and relatively constant viscosity help fight wear and provide enhanced extreme-temperature performance.

75W-140
293600140
$31.99

75W-90
293600043
$23.99

XPS CARBON FREE



- XPS Carbon Free prevents problems inherent in Ethanol-blended fuels.
- Extends storage life of fuel up to 12 months.
- Cleans fuel system while preventing corrosion and oxidation.
- Helps keep piston rings, valves and combustion chamber carbon-free to prevent difficult starting and restore peak performance.

219702533

$8.99

XPS FUEL STABILIZER



- Extends fuel life by preventing fuel breakdown during storage.
- Helps prevent difficult starting, throttle hesitation and poor performance.
- Anti-corrosive, anti-oxidant formula protects fuel system and engine.
- Prevents problems inherent in Ethanol-blended fuels.

413408601

$9.99

XPS SYNTHETIC SUPSENSION GREASE



- Provides optimal lubrication at temperature extremes.
- Protects against external contamination.
- Specifically formulated for use in Can-Am off-road vehicles.
- Allows suspensions to perform regardless of conditions.
- 14 oz. (400 g).

293550033

$10.99

XPS DOT 4 BRAKE FLUID



- Exceeds D.O.T 3 and 4 requirements.
- Unique low-moisture formulation providing maximum protection against vapor lock.
- Recommended in Can-Am off-road vehicles.

293600131

$9.99

XPS PRE-MIXED ANTIFREEZE/COOLANT



- Pre-mixed, ready-to-use.
- Exceptional 5-year extended service life.
- Provides superior heat transfer, protection against corrosion and cavitation.
- Specifically formulated for use in your Can-Am vehicle.
- Ideal as a replacement coolant in vehicles that usually use 2-year antifreeze/coolant (green).

5-year (orange)
1 quart (946 ml)
219702685

$9.99

XPS LUBE



- A multipurpose lubricant that prevents rust, corrosion and moisture intrusion.
- Contains active extreme-pressure additives which provide excellent lubrification and antiwear properties.
- Comes in a spray that works upside down.
- 14 oz. (400 g).

293600016

$11.99

XPS®

MORE THAN JUST OIL.



XPS OILS AND ROTAX ENGINES. CREATED, DEVELOPED, AND CONSTANTLY EVOLVING TOGETHER TO WORK BEST TOGETHER.

It's all about reaching optimum performance and protection, ensuring XPS oils have no equals when used in Rotax engines, and Rotax engines have no equals when they use XPS oils.

QUALITY, INNOVATION, RELIABILITY AND PERFORMANCE GO INTO EVERY BRP VEHICLE AND INTO EVERY DROP OF XPS OIL.

Our performance requirements exceed oil certification standards, so we set our own: Testing, and retesting our oils in every Rotax engine type under a wide range of rigorous operating conditions to make sure they work the best under all conditions.

XPS IS THE ONLY OIL SPECIFICALLY ENGINEERED FOR ROTAX ENGINES.

BRP's Rotax engines are the perfect embodiment of power and technology, and only highly specialized, specially engineered XPS oils can ensure they always operate at their maximum efficiency and potential.

XPS OILS & ROTAX ENGINES. PARTNERS IN PERFORMANCE.










ski-doo LYNX SEA-DOO EVINRUDE ROTAX can-am

©2016 Bombardier Recreational Products Inc. (BRP). All rights reserved. ®, ™ and the BRP logo are trademarks of BRP or its affiliates.

716001441 US

UNLEASH YOUR INNER MAVERICK







THE ALL NEW
MAVERICK X3

can-am | BRP



MAVERICK X3



A MAVERICK DOESN'T TAKE SHORTCUTS, AND NEITHER DID WE. AN UNQUENCHABLE THIRST FOR HARNESSING EARTH-SHATTERING POWER LED TO OUR MOST ADVANCED SUSPENSION, CHASSIS, COCKPIT, AND DRIVER-FOCUSED DESIGN EVER. THE MAVERICK X3: BUILT TO DEFY WHAT YOU THOUGHT WAS POSSIBLE.

UNLEASH YOUR INNER MAVERICK.





NO SHORTCUTS

DEFIANT

THE CAN-AM MAVERICK X3 HAS AN EXTREMELY BOLD CHARACTER THAT UNDENIABLY SEPARATES IT FROM THE CROWD, AND IT'S DESIGNED SO THE DRIVER AND PASSENGER FEEL CONNECTED TO ITS EVERY MOVE. ENGINEERED TO BE DRIVER-FOCUSED AND INTUITIVE, THE MAVERICK X3 ENSURES DRIVERS OF ANY SKILL LEVEL WILL BE ABLE TO CONFIDENTLY TACKLE THE CHOSEN TERRAIN.

PRECISE

FEATURING A REVOLUTIONARY, BEST-IN-CLASS, HIGH-PERFORMANCE SUSPENSION SYSTEM WITH EXCELLENT FRONT AND REAR BALANCE, THE MAVERICK X3'S OPTIMIZED HANDLING IS ANCHORED BY A NEXT-GENERATION FULLY-WELDED LIGHTWEIGHT STEEL CHASSIS FOR SUPERIOR PERFORMANCE.

POWERFUL

FOR PERFORMANCE IN ALL CONDITIONS, THE CAN-AM MAVERICK X3 INTRODUCES AN ENTIRELY NEW LEVEL OF POWER WITH ITS 154 HP TURBOCHARGED AND INTERCOOLED ROTAX ACE ENGINE, NOW WITH IMPROVED AIRFLOW AND A RESPONSIVE ENHANCED TRANSMISSION TUNED TO HELP FIND MORE SPEED... ANYWHERE.



DEFIANT



TRADEMARK CAN-AM DNA WITH NEXT GENERATION DESIGN

The X3 tears up the side-by-side vehicle rulebook with a single promise: to connect you with its every move. From its unmistakable, future-forward exterior design to its Ergo-Lok cockpit that puts the driver at the heart of the vehicle and with its unique Can-Am LED signature, it's time to tackle terrain from the comfort of your very own off-road beast.



LOW SEATS, BOLD STANCE

Its low seating arrangement is designed to encapsulate both driver and passenger so they feel connected to the vehicle's every move, without compromising ground clearance at up to 15 inches. Its high and dominant posture is enhanced with race car-inspired one-piece molded seats with ideal support, weight distribution, and 4-way adjustablility.

ERGO-LOK COCKPIT WITH FOUR-WAY ADJUSTABLE SEATS

Everything is in its right place, from the sports car-like centered accelerator and brake pedals to race-inspired, flat-bottom steering wheel that tilts up or down 25°. The four-way adjustable seats – 2 inches in height and 6 inches in slide, ease of accessorization, and integrated wiring allow it to truly adapt to its owner.

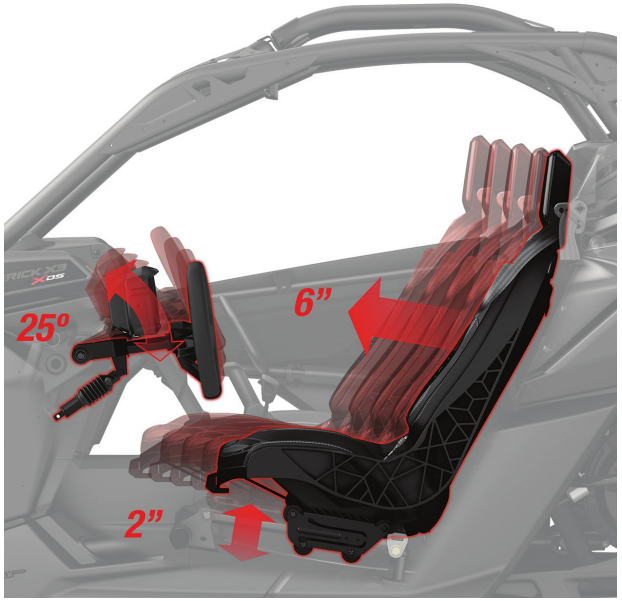

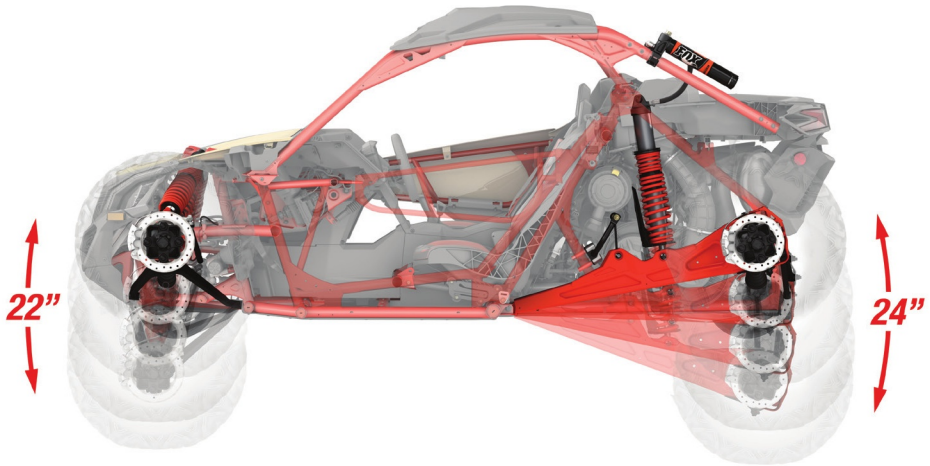



TTX SUSPENSION WITH INDUSTRY LEADING TRAVEL

The Can-Am Maverick X3 X rs Turbo R side-by-side vehicle features an industry-leading 24 inches (61 cm) of suspension travel. Can-Am's all-new four-link TTX suspension features a trophy truck-like trailing arm and three links dedicated to controlling camber while delivering optimal geometry at all times, even during extended wheel travel. The result? Unparalleled power transfer to wheels, virtually no bump steer, precise steering response, and more confidence at higher speeds.

SHARPEST HANDLING FEATURES

From its arched double tubular A-Arm and sway bar up front to its race-inspired quick-ratio D-shaped steering wheel, Tri-Mode DPS system, and Intelligent Throttle Control (iTC™), the Maverick X3 provides precise handling even in rough terrain or at high speed.

ULTRA EFFICIENT AND LIGHTWEIGHT CHASSIS

The Maverick X3 features a fully welded ultralight, rigid chassis made of state-of-the-art Dual-Phase 980 steel. So? Figure 53% better torsional stiffness and still 20% lighter than its closest competitor.





154 HP WITH TURBOCHARGED AND INTERCOOLED ROTAX® ACE ENGINE

Meet the ultimate of side-by-side engines, the precision-engineered triple-cylinder Rotax ACE engine. Its relentless, turbocharged power gives searing speed, no matter the terrain.

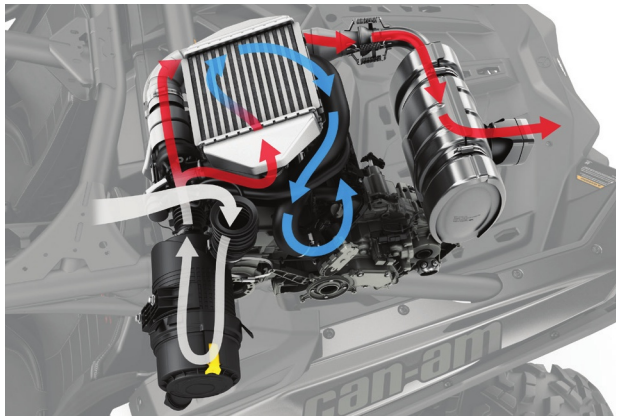

ADVANCED AIRFLOW DYNAMICS

With an intake and exhaust tuned to maximize power, efficiency, and throttle response, the Can-Am Maverick X3 will never be starved for performance. Three oversized, out-of-the-way intakes feed the engine and the CVT with clean air and keep temperatures low, with a sport exhaust out back to let the Rotax ACE engine roar.

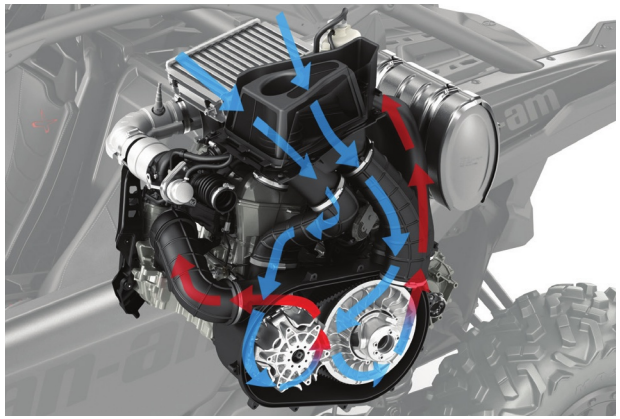

SHIFTLESS QRS-X TRANSMISSION

A compact, high-performance QRS-X CVT has been calibrated to work with the turbo to virtually eliminate lag, without shifting or torque interruption to slow you down. Its large drive—a long, wide, and thick belt—is our most robust three-roller pulley design yet.



CHOOSE YOUR BEAST





Standard features and technologies

154 HP ROTAX ACE TRIPLE-CYLINDER TURBOCHARGED ENGINE WITH INTEGRATED INTERCOOLER AND DONALDSON† HIGH-PERFORMANCE AIR FILTER

QUICK RESPONSE SYSTEM X (QRS-X) CVT WITH HIGH AIRFLOW

4-LINK TORSIONAL TRAILING-ARM X (TTX) REAR SUSPENSION

DOUBLE A-ARM FRONT SUSPENSION

Specific to models

MAVERICK™ X3 TURBO R

64 in. wide

14 in. aluminum wheels with 28 in. Maxxis Bighorn† 2.0 tires

Front and rear 20 in. of suspension travel

FOX† 2.5 PODIUM Piggyback shocks with QS3† compression adjustment

Full High Molecular Weight (HMW) skid plate

14 in. of ground clearance

White color option



MAVERICK™ X3 X™ DS TURBO R

64 in. wide

14 in. aluminum beadlock wheels with 29 in. Maxxis Bighorn 2.0 tires

Front and rear 20 in. of suspension travel

Fully adjustable FOX 2.5 PODIUM RC2† Piggyback shocks

Full High Molecular Weight (HMW) skid plate

14 in. of ground clearance

X package decals and seat trims

Triple Black, Circuit Yellow painted color options



MAVERICK™ X3 X™ RS TURBO R

72 in. wide

14 in. aluminum beadlock wheels with 30 in. Maxxis Bighorn 2.0 tires

22 in. of front suspension travel and 24 in. of rear suspension travel

Fully adjustable FOX 3.0 PODIUM RC2 remote reservoir shocks with bypass

15 in. of ground clearance

Heavy-duty full High Molecular Weight (HMW) skid plate

Full roof

X package decals and seat trims

Triple Black, Gold & Can-Am Red painted color options





PUMP IT UP

MAVERICK X3 IS ABOUT THE RUSH AND BREATHTAKING EXHILARATION OF A TURBOCHARGED ROTAX ENGINE UNLEASHED WITHIN A FINELY TUNED PERFORMANCE MACHINE THAT CAN GO ANYWHERE. THE MAVERICK X3 CHALLENGES YOUR LIMITS, LETS YOU TRAVEL FARTHER, CLIMB HIGHER, AND NEGOTIATE TIGHTER TURNS IN TOUGHER TERRAIN THAN YOU THOUGHT POSSIBLE. OFFICIAL BRP ACCESSORIES OFFER AN ENTIRELY NEW LEVEL OF ENJOYMENT AND ARE DESIGNED TO ENHANCE YOUR MACHINE'S ALREADY IMPRESSIVE COMFORT AND GREAT LOOKS.

PERFORMANCE
ACCESSORIES

Awesome performance gives an incredible rush of adrenaline. That's why you ride a Maverick X3 X rs Turbo R with a 154 horsepower Rotax as its heart. Excitement is what got you in the game—our accessories let you play according to your rules. Choose from a selection of fully-engineered, performance-driven accessories to get more comfort, more protection, and enhance the look of your Maverick X3.

SHOWN ON VEHICLE

Lonsestar Racing Front Bumper
715004161

Lonsestar Racing Front Intrusion Bar
715004163

Lonestar Racing Rear Bumper
715004162

Lonestar Racing Rear Intrusion Bar
715004164

Lonestar Racing Rock Sliders
715004165

Lonestar Racing Spare Tire Holder
715004166

Lonestar Racing Fire Extinguisher Support
715003734

Lonestar Racing Number Plate Holder
715003943

Lonestar Racing 40" (102 cm) LED Light Bar Rack
715003920

40" (102 cm) Baja Design OnX6 Arc LED Light Bar
710004630

Lonestar Racing Aluminum Roof
715004160



MAVERICK X3 X DS TURBO R
Triple Black

DESERT
ACCESSORIES

Your Maverick X3 was made for desert adventure, and X3 accessories can intensify excitement by ratcheting up both comfort and style. A Maverick X3 won't stop for the heat, and it won't slow down in even the most demanding terrain. Cutting-edge Can-Am accessories have been designed for drivers who crave non-stop high-energy desert excitement, and offer more comfort, protection, and a desert-honed look.

SHOWN ON VEHICLE

Front Pre-Runner Bumper
715003433

Rear Pre-Runner Bumper
715003436

Rock Slider
715003438

Light Support Bar
715003529

Baja Design XL80 LED Light
710005041

Baja Design XL Sport LED Light
710005287

LinQ Pivoting Rack
715003439

LinQ 8 GAL (30L) Cooler Box
715002892

Half Windshield
715002909

Rear Wind Screen
715002897

Super Extended Fender Flares
715002973





MAVERICK X3 X RS TURBO R
Gold & Can-Am Red

DUNE
ACCESSORIES

Dunes intimidate: tough and towering, every climb turns into a battle of wills—the dunes' against yours. But there isn't one big or bad enough to scare you off. Give your Maverick X3 an unbeatable edge by adding accessories made to challenge every dune you can find.



MAVERICK X3 TURBO R
White

SHOWN ON VEHICLE

Dune Front Bumper
715002961

Dune Rear Bumper
715002962

Front Intrusion Bar
715002889

Rear Cage Extension
715002890

Lower Door Panel
715002903

40" (102 cm) Baja Design OnX6 Arc LED Light Bar
710004630

Light Support Bar
715003529

Lighted Whip Flag
715002886

Aluminum Roof
715002900

Complete MTX Audio system
715002873

Baja Design Squadron Sport LED Light
710004648

Racing Side Mirrors
715002898

Electronic Device Holder
715002874

BUT WAIT, THERE'S MORE...

We're dedicated to evolving the game forward, and plan on enabling every last bit of comfort and pumping up the Maverick X3's knockout good looks with cutting-edge accessories. Can-Am engineers never stop working on new features and enhancements to get the most out of your ride, so keep an eye out for much more to come. Here's a sneak peek of what you can expect soon.

COMPLETE MTX AUDIO SYSTEM
INTERCOM SYSTEM
CAR-TO-CAR SYSTEM

BEARD SEATS



YOSHIMURA EXHAUST



CHASE LIGHTS



	ENGINE	SUSPENSIONS	TIRES / WHEELS

MAVERICK X3 TURBO R



White

Type
154 hp, Rotax ACE (Advanced Combustion Efficiency) 900 cc Turbocharged Triple-Cylinder engine, liquid cooled with integrated intercooler and Donaldson† high-perfomance air filter

Fuel Delivery System
Intelligent Throttle Control (iTC™) with Electronic Fuel Injection (EFI)

Transmission
Quick Response System X (QRS-X) CVT with high airflow, L / H / N / R / P

Drive Train
Selectable 2WD / 4WD with Visco-Lok† X auto-locking front differential

Power Steering
Tri-Mode Dynamic Power Steering (DPS™)

Front Suspension
Double A-Arm with sway bar
20 in. (50.8 cm) travel

Front Shocks
FOX 2.5 PODIUM Piggyback with QS3† compression adjustment

Rear Suspension
4-link Torsional Trailing-Arm X (TTX) with sway bar, 20 in. (50.8 cm) travel

Rear Shocks
FOX 2.5 PODIUM Piggyback with QS3† compression adjustment and bottom-out control

Front Tires
Maxxis Bighorn 2.0
28 x 9 x 14 in. (71.1 x 22.9 x 35.6 cm)

Rear Tires
Maxxis Bighorn 2.0
28 x 11 x 14 in. (71.1 x 27.9 x 35.6 cm)

Wheels
14 in. (35.6 cm) aluminum

MAVERICK X3 X DS TURBO R



Triple Black



Circuit Yellow

Type
154 hp, Rotax ACE (Advanced Combustion Efficiency) 900 cc Turbocharged Triple-cylinder engine, liquid cooled with integrated intercooler and Donaldson high-perfomance air filter

Fuel Delivery System
Intelligent Throttle Control (iTC™) with Electronic Fuel Injection (EFI)

Transmission
Quick Response System X (QRS-X) CVT with high airflow, L / H / N / R / P

Drive Train
Selectable 2WD / 4WD with Visco-Lok† X auto-locking front differential

Power Steering
Tri-Mode Dynamic Power Steering (DPS™)

Front Suspension
Double A-Arm with sway bar
20 in. (50.8 cm) travel

Front Shocks
FOX 2.5 PODIUM RC2† Piggyback with dual speed compression and rebound adjustments

Rear Suspension
4-link Torsional Trailing-Arm X (TTX) with sway bar, 20 in. (50.8 cm) travel

Rear Shocks
FOX 2.5 PODIUM RC2† Piggyback with dual speed compression, rebound adjustments and bottom-out control

Front Tires
Maxxis Bighorn 2.0
29 x 9 x 14 in. (73.7 x 22.9 x 35.6 cm)

Rear Tires
Maxxis Bighorn 2.0
29 x 11 x 14 in. (73.7 x 27.9 x 35.6 cm)

Wheels
14 in. (35.6 cm) aluminum beadlock

MAVERICK X3 X RS TURBO R



Triple Black



Gold & Can-Am Red

Type
154 hp, Rotax ACE (Advanced Combustion Efficiency) 900 cc Turbocharged Triple-cylinder engine, liquid cooled with integrated intercooler and Donaldson high-perfomance air filter

Fuel Delivery System
Intelligent Throttle Control (iTC™) with Electronic Fuel Injection (EFI)

Transmission
Quick Response System X (QRS-X) CVT with high airflow, L / H / N / R / P

Drive Train
Selectable 2WD / 4WD with Visco-Lok‡ X auto-locking front differential

Power Steering
Tri-Mode Dynamic Power Steering (DPS™)

Front Suspension
Trophy truck inspired double A-Arm with sway bar 22 in. (55.9 cm) travel.

Front Shocks
FOX 2.5 PODIUM RC2 Piggyback with bypass, dual speed compression and rebound adjustments

Rear Suspension
4-link Torsional Trailing-Arm X (TTX) with sway bar, 24 in. (61 cm) travel

Rear Shocks
FOX† 3.0 PODIUM RC2 remote reservoir with bypass, dual speed compression and rebound adjustments

Front Tires
Maxxis Bighorn 2.0
30 x 10 x 14 in. (76.2 x 25.4 x 35.6 cm)

Rear Tires
Maxxis Bighorn 2.0
30 x 10 x 14 in. (76.2 x 25.4 x 35.6 cm)

Wheels
14 in. (35.6 cm) aluminum beadlock

BRAKES	DIMENSIONS / CAPACITIES	FEATURES	WARRANTY
Front Dual 262 mm ventilated disc brakes with hydraulic twin-piston calipers **Rear** Dual 248 mm ventilated disc brakes with hydraulic twin-piston calipers	**Estimated Dry Weight** 1,470 lb (666.9 kg) **Chassis / Cage** Dual-phase 980 steel and fully welded **L x W x H** 131 x 64 x 66 in. (332.7 x 162.5 x 167.6 cm) **Wheelbase** 102 in. (259.1 cm) **Ground Clearance** 14 in. (35.6 cm) **Rack Capacity** 200 lb (91 kg) with LinQ™ quick-attach **Storage Capacity** Total: 2.5 US Gal (9.4 L) Glove box: 1.6 US gal (6.2 L) Central console: 0.8 US gal (2.8 L) Cup holders: 0.1 US gal (0.4 L) **Fuel Capacity** 10.5 gal (40L)	**Gauge** Multifunction analog / digital: Speedometer, tachometer, odometer, trip and hour meters, fuel, gear position, sport / ECO™ mode, seat belt and 4 x 4 indicator, diagnostics, clock, auto shutoff **Instrumentation** Lighter type DC Outlet in central console **Anti-Theft System** RF Digitally Encoded Security System (D.E.S.S.™) with Start / Stop button **Lighting** LED headlights and tail lights with unique Can-Am LED signature **Protection** Integrated front bumper, full High Molecular Weight (HMW) skid plate and quarter-doors	**Factory** 6 months limited warranty **Extended** Up to 30 months B.E.S.T. coverage
Front Dual 262 mm ventilated disc brakes with hydraulic twin-piston calipers **Rear** Dual 248 mm ventilated disc brakes with hydraulic twin-piston calipers	**Estimated Dry Weight** 1,490 lb (675.9 kg) **Chassis / Cage** Dual-phase 980 steel and fully welded **L x W x H** 131 x 64 x 66 in. (332.7 x 162.5 x 167.6 cm) **Wheelbase** 102 in. (259.1 cm) **Ground Clearance** 14 in. (35.6 cm) **Rack Capacity** 200 lb (91 kg) with LinQ™ quick-attach **Storage Capacity** Total: 2.5 US Gal (9.4 L) Glove box: 1.6 US gal (6.2 L) Central console: 0.8 US gal (2.8 L) Cup holders: 0.1 US gal (0.4 L) **Fuel Capacity** 10.5 gal (40L)	**Gauge** Multifunction analog / digital: Speedometer, tachometer, odometer, trip and hour meters, fuel, gear position, sport / ECO™ mode, seat belt and 4 x 4 indicator, diagnostics, clock, auto shutoff **Instrumentation** Lighter type DC Outlet in central console **Anti-Theft System** RF Digitally Encoded Security System (D.E.S.S.™) with Start / Stop button **Lighting** LED headlights and tail lights with unique Can-Am LED signature **Protection** Integrated front bumper, full High Molecular Weight (HMW) skid plate and quarter-doors	**Factory** 6 months limited warranty **Extended** Up to 30 months B.E.S.T. coverage
Front Dual 262 mm ventilated disc brakes with hydraulic twin-piston calipers **Rear** Dual 248 mm ventilated disc brakes with hydraulic twin-piston calipers	**Estimated Dry Weight** 1,585 lb (718.9 kg) **Chassis / Cage** Dual-phase 980 steel and fully welded **L x W x H** 132 x 72 x 67 in. (335.3x 182.9 x 170.2 cm) **Wheelbase** 102 in. (259.1 cm) **Ground Clearance** 15 in. (38.1 cm) **Rack Capacity** 200 lb (91 kg) with LinQ™ quick-attach **Storage Capacity** Total: 2.5 US Gal (9.4 L) Glove box: 1.6 US gal (6.2 L) Central console: 0.8 US gal (2.8 L) Cup holders: 0.1 US gal (0.4 L) **Fuel Capacity** 10.5 gal (40L)	**Gauge** Multifunction analog / digital: Speedometer, tachometer, odometer, trip and hour meters, fuel, gear position, sport / ECO™ mode, seat belt and 4 x 4 indicator, diagnostics, clock, auto shutoff **Instrumentation** Lighter type DC Outlet in central console **Anti-Theft System** RF Digitally Encoded Security System (D.E.S.S.™) with Start / Stop button **Lighting** LED headlights and tail lights with unique Can-Am LED signature **Protection** Integrated front bumper, heavy-duty full High Molecular Weight (HMW) skid plate, quarter-doors and full roof.	**Factory** 6 months limited warranty **Extended** Up to 30 months B.E.S.T. coverage

© 2016 Bombardier Recreational Products Inc. (BRP). All rights reserved. ™ ® and the BRP logo are registered trademarks of BRP or its affiliates. Products are distributed in the U.S.A. by BRP US Inc. ‡ Visco-Lok is a trademark of GKN Viscodrive GmbH. † All other trademarks are the property of their respective owners. *Base model dry weight shown. Because of our ongoing commitment to product quality and innovation, BRP reserves the right at any time to discontinue or change specifications, price, design, features, models or equipment without incurring any obligation. Some models depicted may include optional equipment. Read the side-by-side vehicle (SSV) Operator's Guide and watch the Safety DVD before driving. For your safety: wear a helmet, eye protection and other protective gear. Fasten lateral net and seat belt at all times. Always remember that riding and alcohol/drugs don't mix. SSV is for off-road use only. Never ride on paved surfaces or public roads. Operator must be at least 16 years old. Passenger must be at least 12 years old and able to hold handgrips and plant feet while seated against the backrest. BRP urges you to "TREAD LIGHTLY" on public and private lands. Preserve your future riding opportunities by showing respect for the environment, local laws and the rights of others when you ride. Make sure that all laws and regulations, are respected. Ride responsibly.










Printed in Canada. P/N. 716001430

ski-doo LYNX SEA-DOO EVINRUDE ROTAX can-am

©2016 Bombardier Recreational Products Inc. (BRP). All rights reserved. ®, ™ and the BRP logo are trademarks of BRP or its affiliates.