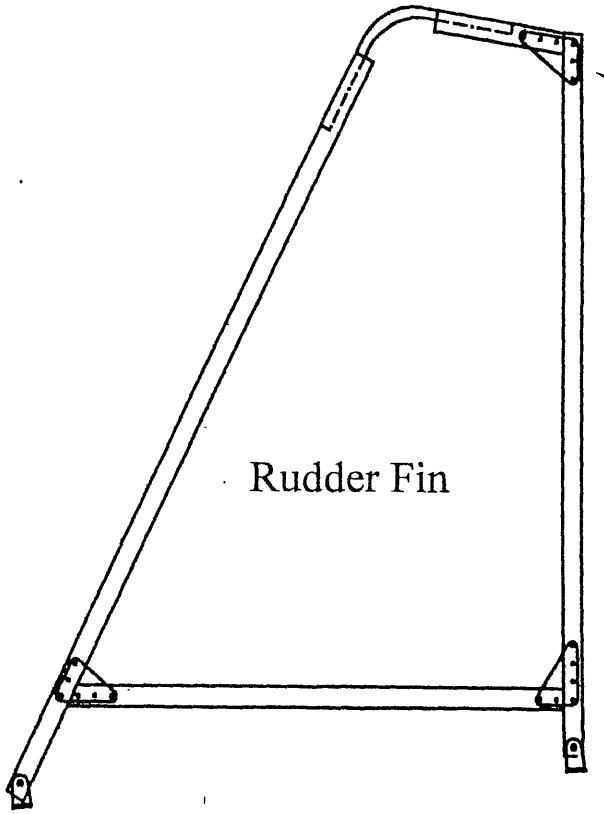

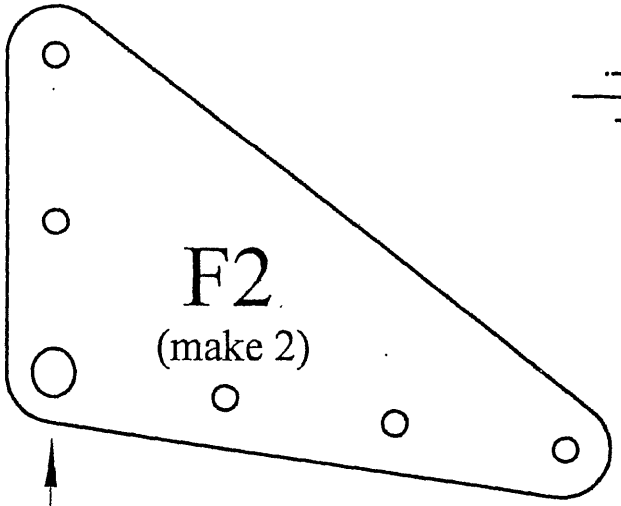

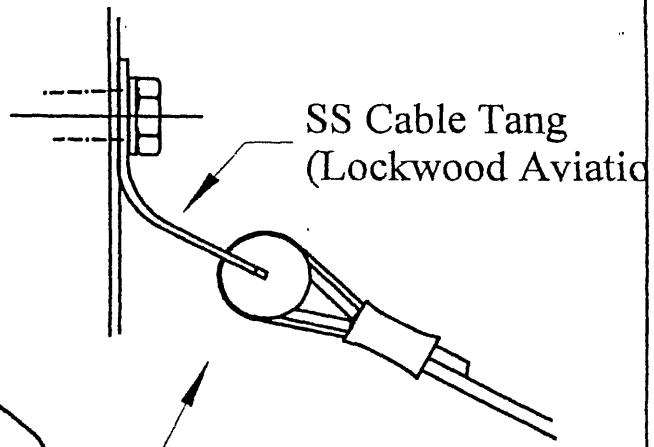

Nicopress sleeve 18-2-6
Cable thimble AN100-4
common for all wires

Make hole here for attach 3/16"

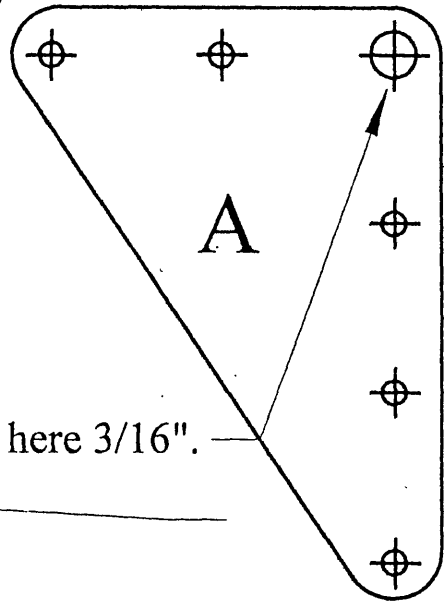

Make hole here 3/16".

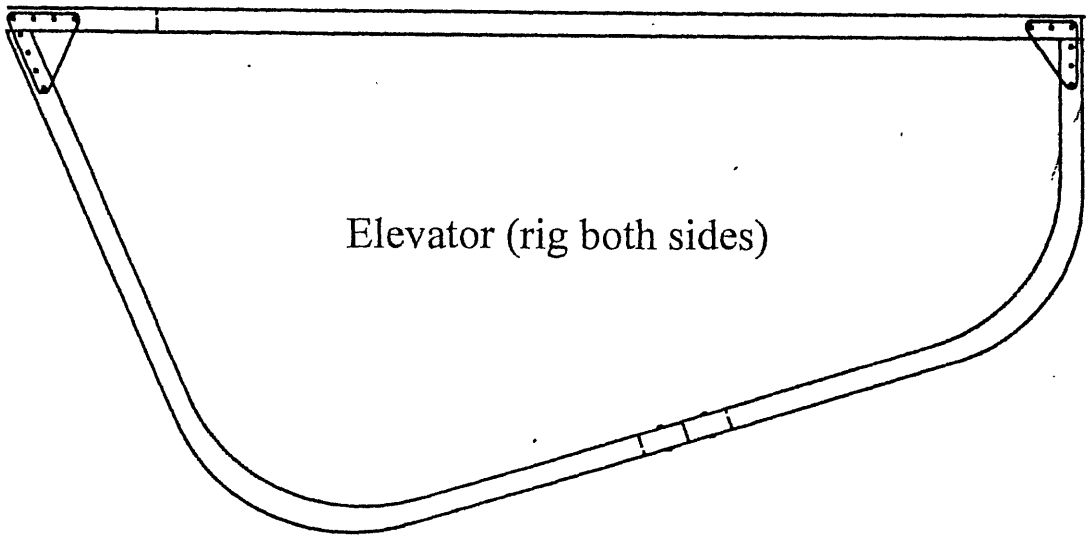

AFFORDAPLANE	
Description: Elevator & Rudder Rigging	
Drawn By: Dave Edwards **Date:** Aug 24, 2000	**Drawing#** S 1

Copyright 2001 by Dave Edwards Marketing Group

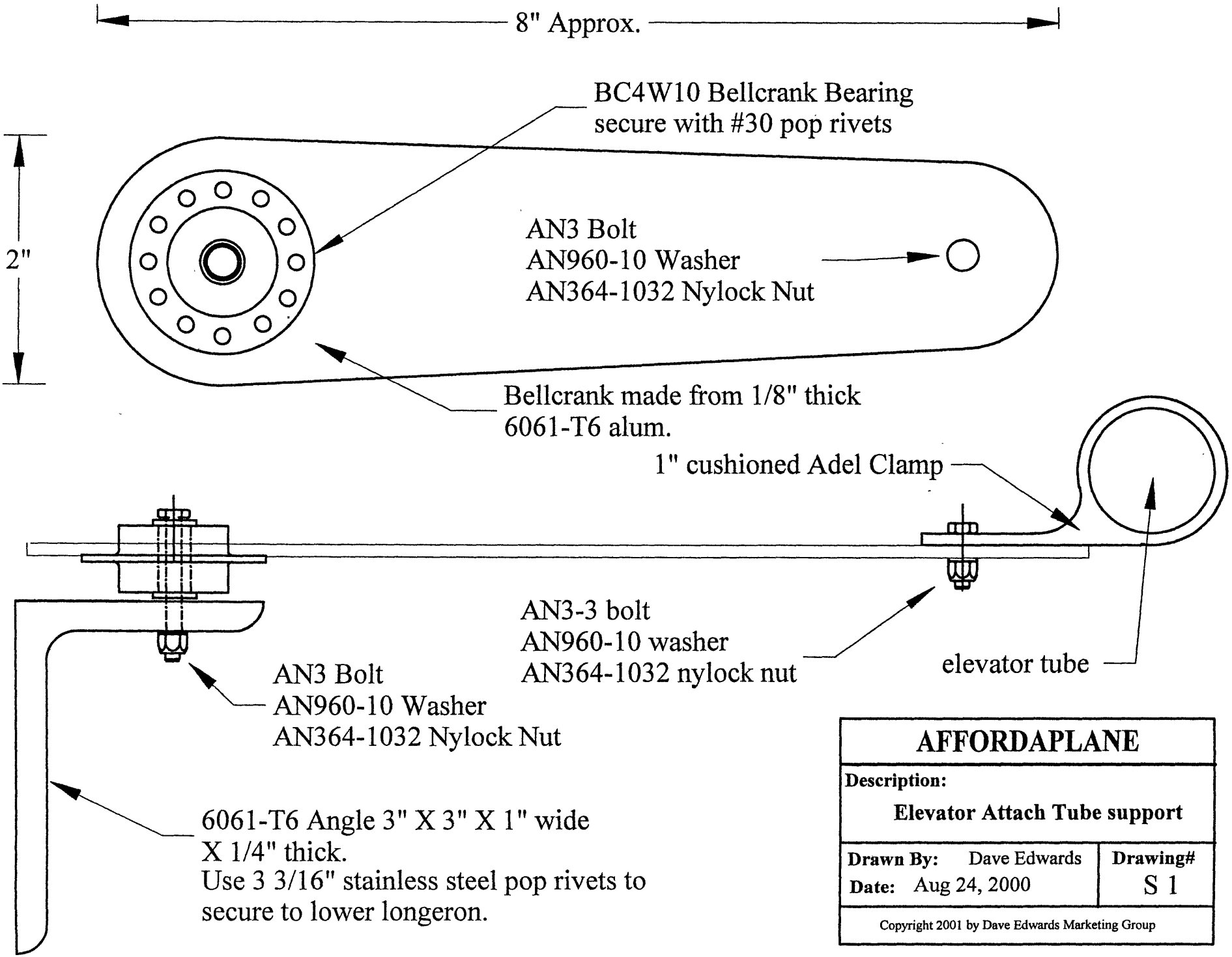

AFFORDAPLANE	
Description: Elevator Attach Tube support	
Drawn By: Dave Edwards **Date:** Aug 24, 2000	**Drawing#** S 1

Copyright 2001 by Dave Edwards Marketing Group

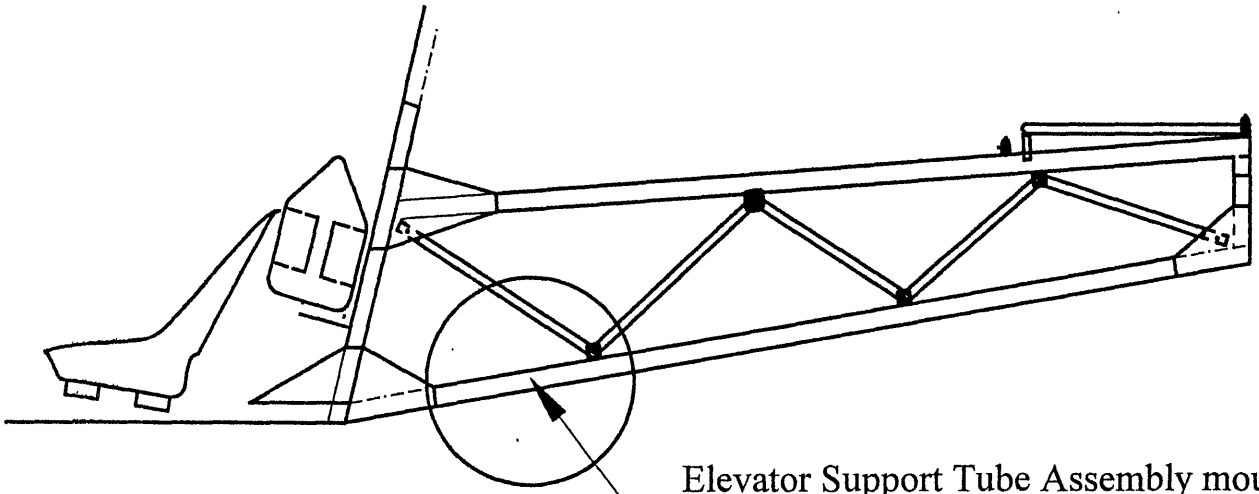

Elevator Support Tube Assembly mounts in this general area.
Make sure the assembly supports the tube without bending the tube.
You want as straight as possible shot from the stick to the elevator bellcrank.

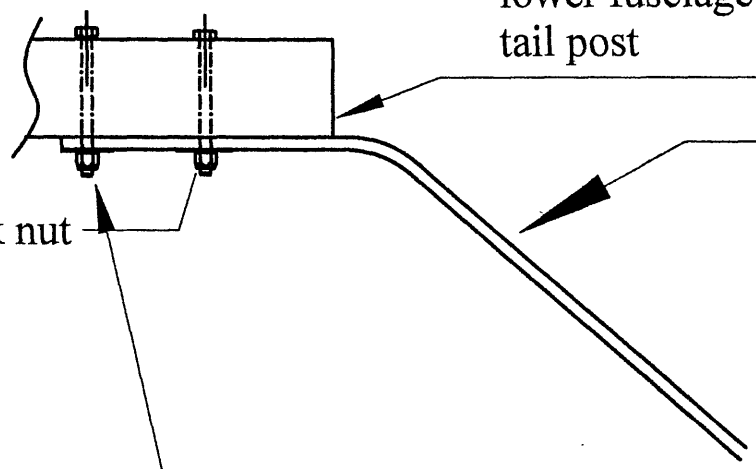

Attach lower tail wires to this bolt with
2 SS cable tangs from Lockwood.
(the same cable tangs described on page 5
of the plans)

AFFORDAPLANE	
Description: **Elevator Attach Tube support (location)** **Lower elev rigging attach point**	
Drawn By: Dave Edwards **Date:** Aug 24, 2000	**Drawing#** S2
Copyright 2001 by Dave Edwards Marketing Group	

AIRFOIL

1

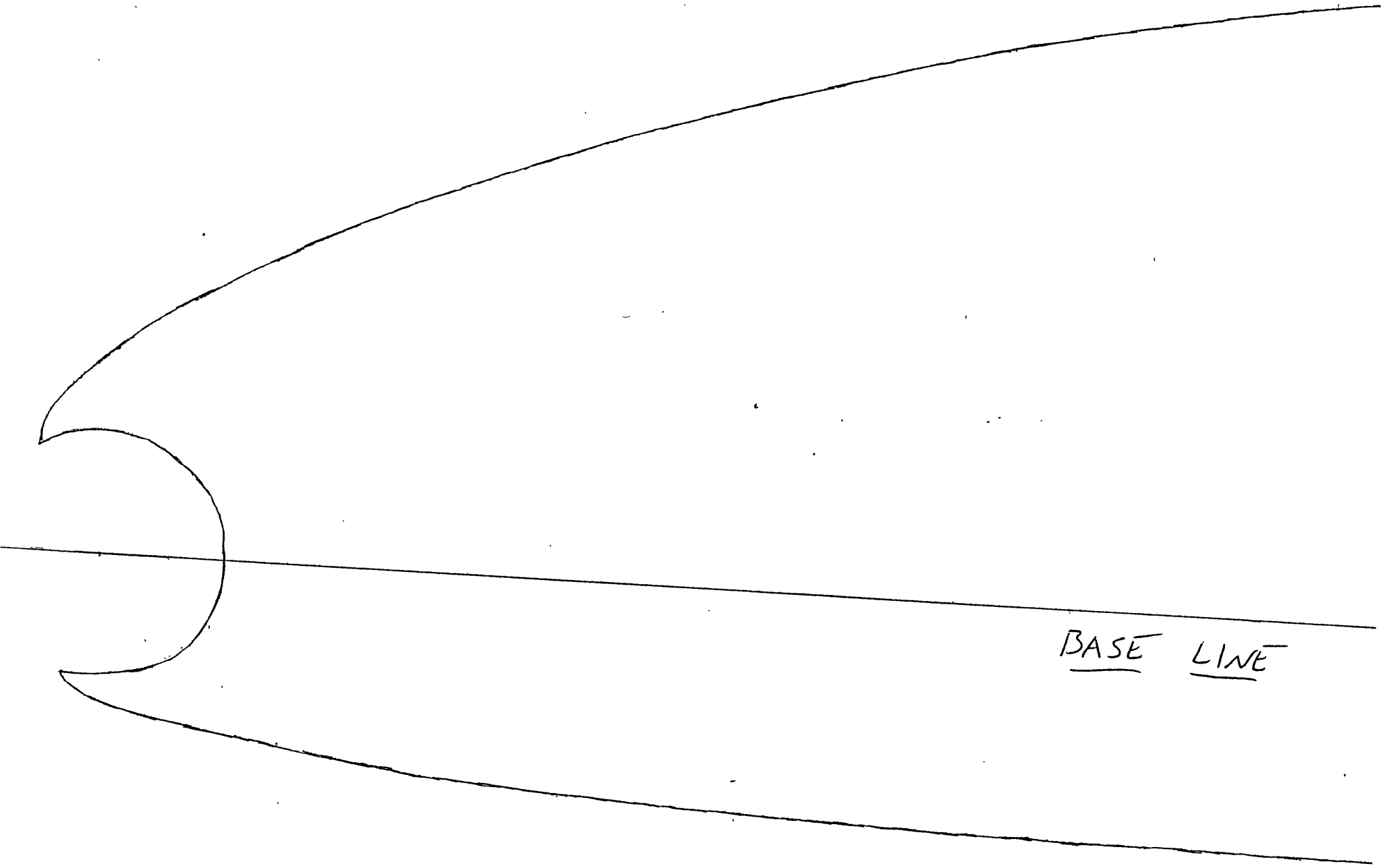

1

M

M

3

4

4

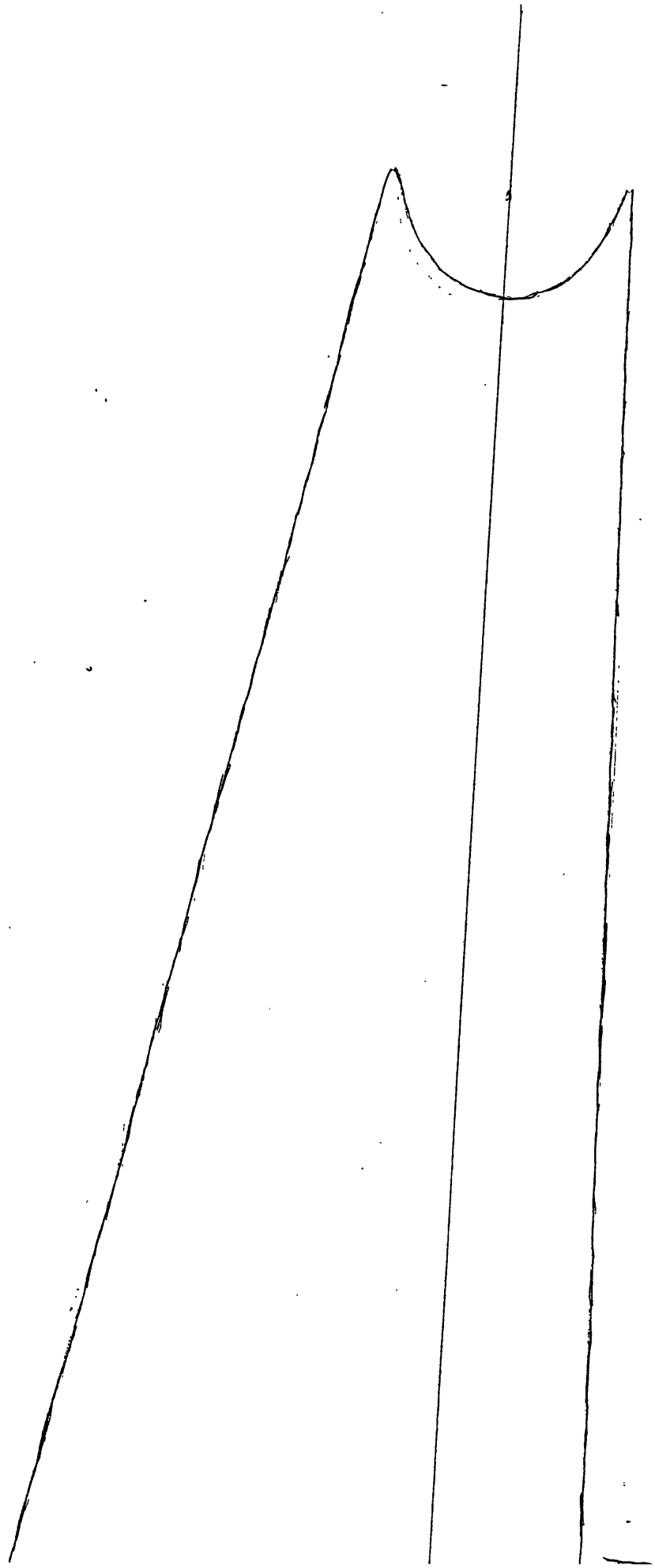

4

Bill Of Materials

Bolts	Quantity
AN3-5A	4
AN3-6A	8
AN3-10A	4
AN3-14A	3
AN3-14	1
AN3-16	2
AN3-16A	4
AN3-20A	4
AN3-25A	92
AN3-27A	2
AN3-30	1
AN4-5	1
AN4-5A	1
AN4-6	2
AN4-7	2
AN4-10	4
AN4-12	1
AN4-16	4
AN4-16A	42
AN4-17A	10
AN4-21A	6
AN4-22A	2
AN4-25	2
AN4-25A	9
AN4-26	1
AN4-26A	6
AN4-27A	2
AN4-30	4
AN4-32	4
AN4-37	1

Bolt Hardware	Quantity
AN960-14 washer	100
AN960-10 washer	125
AN365-428 nylock nut	81
AN364-1032 nylock nut	121
AN316R nut 1/4-28 thread	6
AN960-4 washer	2
AN970-3 washer	4
AN310-3 castle nut	4

AN310-4 Castle Nut 26
MS24665-132 Cotter Pin 30

Aircraft Tubing

6063-T351 Alum SQUARE Tubing QTY 3 12' pieces / 1 10' piece
1/2" X .058 wall 6061-T6 Aluminum tube QTY 4- 12' length
1" X .035 wall 6061-T6 Alum Tube QTY 1- 10' length
5/16" X .035 wall 6061-T6 Alum Tube QTY 3'
1" X .058 wall 6061-T6 Aluminum Tube QTY 11- 12' length QTY 1- 5' length
1 1/8" X .058 wall 6061-T6 Aluminum Tube QTY 4- 10' length QTY 2- 12' length
1 1/2" X .058 wall 6061-T6 Aluminum Tube QTY 2- 12' length
2" X .058 wall 6061-T6 Aluminum Tube QTY 2- 12' length
1 3/8" X .058" wall 6061-T6 Aluminum Tube QTY 6' length
1 7/8" X .058" wall 6061-T6 Aluminum Tube QTY 6' length
1" 6061-T6 Aluminum solid ROD QTY 4' length
7/8" O.D. X .058 wall 6061-T6 Aluminum Tube QTY 2- 7' length

6061 T-6 Aluminum Angle

2" X 2" X .125 wall 6063-T351 Aluminum Angle QTY 3'

Cable and related hardware

3/32" 7X19 strand stainless steel cable 134 feet
Nicopress Oval Sleeves Milspec MS51844 or equivilent Qty 64
Thimbles AN100 for 3/32" cable QTY 32

Misc. Aircraft Hardware

Stainless Cable Tangs with 3/16" hole on each end QTY 32 (Lockwood Aviation)
Stainless U Brackets For 1" Tube (1/4" hole) QTY 21 (Lockwood Aviation)
3/16" stainless Steel pop rivets QTY 190
Rod Ends (female) 1/4" hole 1/4-28 thread QTY 6
Stainless Steel Hinges bent (Drifter fittings) QTY 60 (Lockwood Aviation)
AN115 Shackle QTY 2
Spring Steel 1 1/2" wide X 1/4" thick 18" long
Bellcrank Bearings BC4W10 QTY 2
Threaded Steel Rod 1/4-28 thread QTY 3 feet
Clevis Pin MS20392-2C19 QTY 2
Washers 2" diameter 1/8" thick QTY 4
Pulleys MS24566-2B 3/16" hole QTY 2

Stainless U Brackets for 2" tube 1/4" holes QTY 2
Stainless U brackets for 1 1/2" tube 1/4" holes QTY 2
Stainless Steel Pop Rivets 1/8" diam. QTY 300
locking collar for tailwheel (determine ID from cart wheel)

MISC

Wood Block Inserts 12" X 1 3/4" X 1 3/4" QTY 3
Door Springs QTY 2
Fiberglass Tape 1" width 26 warp 17 fill QTY 1 roll (50 yds)
medium weight fiberglass cloth 50" wide 7 yds
Polyester Resin and Hardener 1/2 gallon
1/16" plywood 90 degree 4' X 8' Sheet
T-88 epoxy 1 quart
Dow blue Styrofoam 1" X 4'X8' QTY 5 sheets
Acrylic or plexiglass sheet 1/8" X 2'X3'
Luan ply doorskin 1 sheet 3' X 6'
Adel Clamps (cushioned) for 1 1/2" round tube QTY 4
15" wheelbarrow tires and rims
fuel line 1/4" poly 7'
fuel line squeeze bulb
bicycle grip
tailwheel from industrial shopping cart 5"
4 bungee cords with hooks on both ends
5 gallon gas can (upright)
1 roll alum flashing (hardware store)
Fiberglass seat from Boat supply
seat cushion (Wal-Mart)

AFFORDAPLANE

The Truly Affordable Ultralight!

Here are the ordinates for the airfoil I used for the A-Plane. If you need help or adittional reference, here is a good site that describes how to plot an airfoil:

Step 1) draw a line 54" long.

Step 2) Using your compass, draw a circle 2" diameter centered on the line, and a 1 1/2" circle at the end of the 54" line. It looks like this:

This line is called the X Axis. This is our base line reference for all the measurements.

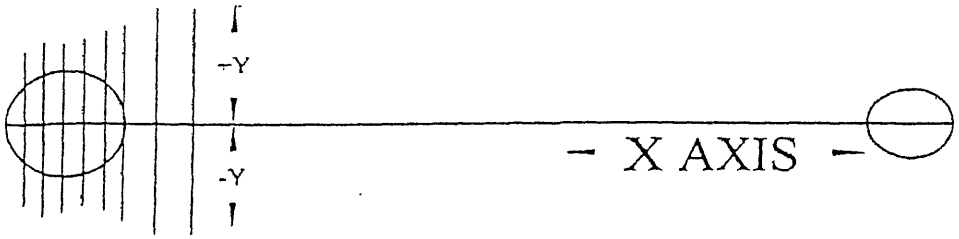

There are three columns of co-ordinates listed below. The first column (X) is the distance from the leading edge of the wing, along the chord. This number shows the point on the reference line (X) where you will draw vertical lines.

The second column is labeled +Y. This is a measurement (in inches) showing how far above the reference line you want to make a mark.

The third column is the -Y ordinates. This measurement shows how far below the reference line you want to make a mark.

Once you have laid out the airfoil, and made marks at each station above and below the

reference line, simply fair in the airfoil outline by 'connecting the dots'.

Step 3) Start with the X column, and make a mark at each point along the X reference line.

Step 4) Using your 90 degree angle, draw vertical lines (above and below) where you made the marks for the X reference.

Step 5) Make a mark as indicated by the +Y column to get the top camber outline.

Step 6) Make a mark at each station for the -Y column (below the X line)

Step 7) Using a french curve or similar instrument, connect the dots to make a smooth airfoil shape.

Step 8) Fair in the camber lines where they intersect the spar tubes. Remember you will be laying ply capstrips around the spars and rib, and want a nice, gentle curve, with no dips or bumps.

NOTE: These measurements are in **actual inches** not a percentage of airfoil dimensions, as is the norm for presenting airfoil ordinates.

X	+Y	-Y
.50"	1.0"	-1.0"
1.0"	1.5"	-1 1/8"
1.5"	1 7/8"	-1 5/16"
2.0"	2 3/16"	-1 3/8"
2.5"	2 7/16"	-1 7/16"
3.0"	2 11/16"	-1 9/16"
4.0"	3 1/16"	-1 5/8"
5.0"	3 7/16"	-1 11/16"
6.0"	3 3/4"	-1 3/4"
7.0"	4 1/16"	-1 13/16"
8.0"	4 7/32"	-1 13/16"
9.0"	4 1/2"	-1 13/16"
10.0"	4 11/16"	-1 7/8"
11.0"	4 13/16"	-1 7/8"
12.0"	4 15/16"	-1 14/16"
13.0"	5.0"	-1 13/16"

14.0"	5 1/8"	-1 13/16"
15.0"	5 3/16"	-1 3/4"
16.0"	5 1/4"	-1 3/4"
17.0"	5 5/16"	-1 11/16"
18.0"	5 5/16"	-1 5/8"
19.0"	5 3/8"	-1 5/8"
20.0"	5 3/8"	-1 5/8"
21.0"	5 3/8"	-1 5/8"
22.0"	5 3/8"	-1 9/16"
23.0"	5 5/16"	-1 1/2"
24.0"	5 5/16"	-1 1/2"
25.0"	5 1/4"	-1 1/2"
26.0"	5 3/16"	-1 1/2"
27.0"	5 1/8"	-1 7/16"
28.0"	5 1/16"	-1 7/16"
29.0"	5.0"	-1 7/16"
30.0"	4 15/16"	-1 3/8"
31.0"	4 7/8"	-1 5/16"
32.0"	4 3/4"	-1 5/16"
33.0"	4 5/8"	-1 5/16"
34.0"	4 1/2"	-1 5/16"
35.0"	4 3/8"	-1 1/4"
36.0"	4 1/4"	-1 1/4"
37.0"	4 1/16"	-1 3/16"
38.0"	3 15/16"	-1 3/16"
39.0"	3 3/4"	-1 1/8"
40.0"	3 9/16"	-1 1/8"
41.0"	3 3/8"	-1 1/8"
42.0"	3 3/16"	-1 1/16"
43.0"	3.0"	-1 1/16"
44.0"	2 13/16"	-1.0"
45.0"	2 9/16"	-1.0"
46.0"	2 3/8"	-1.0"
47.0"	2 1/8"	-15/16"
48.0"	1 15/16"	-15/16"
49.0"	1 3/4"	-7/8"
50.0"	1 1/2"	-7/8"
51.0"	1 5/16"	-13/16"
52.0"	1 1/16"	-13/16"
53.0"	7/8"	-3/4"